CITY OF DANA POINT
PLANNING DIVISION

This plan has been reviewed for ZONING ONLY and meets the requirements of Title 9 of the Dana Point Municipal Code.

APPROVED KBN

DATE 10/21/24

COMMENTS BUILDING 12 (OC PERMIT PKG21-0516) PER CDP13-0018(I).
ROOF HEIGHT CERTIFICATION REQUIRED PRIOR TO FINAL ROOF SHEATHING INSPECTION PER CONDITION NO. 52 OF RESOLUTION NO. 14-11-18-06

PLANNING FINAL REQUIRED
CONTACT CITY OF DANA POINT PLANNING @ (949) 248-3563

HEIGHT
CERTIFICATION REQUIRED PRIOR TO ROOF SHEATHING INSPECTION
SUBJECT TO 2 WORKING DAY PLANNING REVIEW

Zoning: CanningK 11/13/2024

Building&Safety: OCPWAzarvandB 12/22/2025

Permits: BNR21-0246, ELE21-0853, MEC21-0514, PLB21-0900

County of Orange - OC Public Works
OC Development Services
APPROVED

This set of plans and specifications must be kept on the job at all times. It is unlawful to make any changes or alterations to these plans without written permission from OC Public Works/ OC Development Services of Orange County. The stamping of these plan specifications SHALL NOT be held to permit or be an approval of the violation of any provisions of any County Ordinance or State law.

Hani Tabatabaee
BUILDING OFFICIAL

DANA POINT HARBOR PARTNERS



DANA POINT HARBOR COMMERCIAL CORE

BUILDING 12

1290 HARBOR WAY
DANA POINT, CA 92629

SMS ARCHITECTS
100 Progress | Suite 250
Irvine, California 92618
949.757.3240 | www.sms-arch.com

CONSTANT

DANA POINT HARBOR PARTNERS

PROJECT NAME
DANA POINT HARBOR COMMERCIAL CORE
BUILDING 12
1290 HARBOR WAY
DANA POINT, CA 92629

CLIENT
BWP BURNHAM|WARD PROPERTIES

LICENSED ARCHITECT
BRANDON DEDMON
No. C-37432
11.30.23
Exp. Date
STATE OF CALIFORNIA

No.	DATE	ISSUE
	9/30/2022	50% SCHEMATIC DESIGN
	10/28/2022	100% SCHEMATIC DESIGN
	02/10/2023	100% DESIGN DEVELOPMENT
	03/17/2023	50% CONSTRUCTION DOCUMENTS
A	04/21/2023	COUNTY RESUBMITTAL
B	10/09/2024	CITY PLANNING RESUBMITTAL

DRAWINGS AND WRITTEN MATERIAL APPEARING HEREIN CONSTITUTE ORIGINAL AND UNPUBLISHED WORK OF SMS ARCHITECTS AND MAY NOT BE DUPLICATED, USED OR DISCLOSED WITHOUT WRITTEN CONSENT OF THE ARCHITECT

PROJECT NO. 22039
DATE JANUARY 25, 2023
DRAWING TITLE COVER SHEET

DRAWING NO.
A0.0.0

C:\Users\Brandt\Documents\22039_DPH_Building 12-Arch_brandt@sms-arch.com.rvt

10/8/2024 5:08:00 PM

ABBREVIATIONS

	(A)	FOC	FACE OF CONCRETE	PVMT	PAVEMENT
AB	ANCHOR BOLT	FOIC	FURNISH BY OWNER CONTRACTOR INSTALL	PW	POWER
ACC	ACCORDING / ACCORDION	FTIC	FURNISHED BY TENANT CONTRACTOR INSTALLED		(Q)
ACOUS	ACCOUSTICAL	FOIV	FURNISHED BY OWNER VENDOR INSTALLED	QT	QUARRY TILE
ACT	ACCOUSTICAL CEILING TILE	FOM	FACE OF MASONRY	QTR	QUARTER
AD	AREA DRAIN	FOS	FACE OF STUD		(R)
ADD	ADDENDUM	FP	FIREPROOFING	R	RISER
ADJ	ADJUSTABLE / ADJACENT	FR	FREEZE / FIRE RETARDENT	R&S	BACKER ROD AND SEALANT
AFF	ABOVE FINISH FLOOR	FS	FULL SIZE / FLOOR SINK	RAD	RADIUS
AL	ALUMINUM	FT	FOOT / FEET	RB	RUBBER BASE
ALT	ALTERNATE / ALTERATION	FTG	FOOTING	RCP	REFLECTED CEILING PLAN
ANOD	ANODIZED	FURN	FURNISH / FURNACE	RD	ROOF DRAIN
AP	ACCESS PANEL / APRON PANEL	FURR	FURRING	RECEP	RECEPTION
APPROX	APPROXIMATE	FUT	FUTURE	RECEPT	RECEPTACLE
APT	APARTMENT	FWP	FLAT WALL PANEL	RECT	RECTANGLE
ARCH	ARCHITECT / ARCHITECTURAL			REF	REFERENCE / REFRIGERATOR
ASPH	ASPHALT		(G)	REINF	REINFORCED
AVE	AVENUE	G	GAS	REQ	REQUIRED
AVG	AVERAGE	GA	GAUGE	RES	RESIDENT
AWP	ACOUSTICAL WALL PANEL	GALV	GALVENIZED	RET	RETAINING / RETURN
		GB	GRAB BAR	REV	REVISION
	(B)	GD	GARBAGE DISPOSAL	RH	ROBE HOOK / ROUND HEAD / RIGHT HAND
BC	BOTTOM OF CURB	GFRC	GLASS FIBER REINFORCED CONCRETE	RM	ROOM
BD	BOARD	GFRG	GLASS FIBER REINFORCED GYPSUM	RO	ROUGH OPENING
BITUM	BITUMINOUS	GFRP	GLASS FIBER REINFORCED PLASTER	ROW	RIGHT OF WAY
BL	BUILDING LINE	GL	GLASS / GLAZING	RP	RADIUS POINT
BLDG	BUILDING	GLAM	GLUE LAMINATED WOOD	RRL	RAIN WATER LEADER
BLVD	BOULEVARD	GWB	GYPSUM WALL BOARD		(S)
BM	BEAM / BENCH MARK	GYP	GYPSUM	S	SOUTH
BOT	BOTTOM			SH	SHELL
BSMT	BASEMENT		(H)	S&R	SHELF AND ROD
BTWN	BETWEEN	H	HINGE / HIGH	SAN	SANITARY
BUP	BUILT UP ROOF	HB	HOSE BIB	SC	SOLID CORE
BW	BOTTOM OF WALL	HC	HANDICAP / HOLLOW CORE	SCD	SEAT COVER DISPENSER
		HCW	HOT AND COLD WATER / HOLLOW CORE WOOD	SCHED	SCHEDULE
C	CELCIUS / CENTIGRADE	HDBD	HARDBOARD	SCW	SOLID CORE WOOD
CAB	CABINET	HDNR	HARDNER	SD	SOAP DISPENSER
CAP	CAPACITY	HDR	HEADER	SEC	SECOND
CARP	CARPET	HDWD	HARDWOOD	SECT	SECTION
CB	CATCH BASIN / CHALKBOARD	HDWR	HARDWARE	SF	SQUARE FEET
CD	CEILING DIFFUSER	HM	HOLLOW METAL	SFC	SPECIAL FLOOR COATING
CEM	CEMENT	HORIZ	HORIZONTAL	SGEN	SEMI GLOSS ENAMEL
CEM PL	CEMENT PLASTER	HT	HEIGHT	SHR	SHOWER
CER	CERAMIC	HTG	HEATING	SHT	SHEET
CG	CORNER GUARD	HW	HOT WATER	SHTG	SHEATHING
CH	COAT HOOK	HWR	HOT WATER RETURN	SHV	SHEET VYNIL
CHRL	CHAIR RAIL			SLR	SEALER
CI	CAST IRON		(I)		(T)
CIP	CAST IN PLACE	ID	INSIDE DIAMETER / INSIDE DIMENSION	T	TOP
CJ	CONTROL JOINT	IG	INSULATIN GLASS	T&B	TOP AND BOTTOM
CL	CENTER LINE	IE	INVERT ELEVATION	T&G	TOUNGE AND GROOVE
CLG	CEILING	IG	INSULATIN GLASS	TB	TOWEL BAR / TACK BOARD
CLKG	CAULKING	IND	INDICATED	TOC	TOP OF CURB / TOP OF CONCRETE
CLO	CLOSET	INSP	INSPECTION	TD	TOWEL DISPENSER
CLR	CLEAR	INST	INSTALLATION	TDW	TOWEL DISPENSER AND WASTE
CLSR	CLOSER	INSUL	INSULATION	TEL	TELEPHONE
CMU	CONCRETE MASONRY UNIT	INT	INTERIOR	TEMP	TEMPORARY / TEMPERED / TEMPERATURE
CO	CLEAN OUT			TER	TERRAZO
COL	COLUMN		(J)	TOF	TOP OF FOOTING
COMP	COMPOSITE / COMPOSITION	JAN	JANITOR	TG	TEMPERED GLASS
CONC	CONCRETE	JST	JOIST	THK	THICK
COND	CONDITION	JT	JOINT	THR	THRESHOLD
CONN	CONNECT / CONNECTION			T.O.	TOP OF
CONST	CONSTRUCTION		(K)	TOD	TOP OF DECK
CONT	CONTINUOUS	KIT	KITCHEN	TOL	TOILET
COORD	COORDINATE	KO	KNOCK OUT	TOP	TOP OF PARAPET
CORR	CORRIDOR	KP	KICK PLATE	TOS	TOP OF SHEATHING
CR	COLLED ROLLED			TOW	TOP OF WALL
CT	CERAMIC TILE / CURTAIN TRACK		(L)	TPD	TOILET PAPER DISPENSER
CTR	CENTER	L	LEFT / LENGTH	TYP	TYPICAL
CTSK	COUNTERSUNK	LAB	LABORATORY		
CU	CUBIC	LAM	LAMINATED		
CW	COLD WATER	LAV	LAVATORY		(U)
		LH	LEFT HAND	UBC	UNIFORM BUILDING CODE
	(D)	LHR	LEFT HAND REVERSE	UC	UNDER COUNTER / UNDERCUT
d	PENNY / NAIL	LKR	LOCKER	UNFN	UNFINISHED
db	DECIBEL	LL	LINE LOAD	UNO	UNLESS NOTED OTHERWISE
D	CLOTHES DRYER	LP	LOW POINT	UR	URINAL
DBL	DOUBLE	LSG	LAMINATED SAFETY GLASS	UTIL	UTILITY
DECID	DECIDIOUS	LT	LIGHT		
DEPT	DEPARTMENT	LTWT	LIGHTWEIGHT		(V)
DET	DETAIL			VAR	VARIABLE / VARNISH / VARIES
DF	DRINKING FOUNTAIN / DOUGLAS FIR		(M)	VCT	VINYL COMPOSITE TILE
DIA	DIAMETER	MWS	MIRROR WITH SHELF	VERT	VERTICAL
DIAG	DIANGONAL	MACH	MACHINE	V.I.F.	VERIFY IN FIELD
DICA	DRILLELD IN CONCRETE ANCHOR	MAINT	MAINTENANCE	VOL	VOLUME
DIFF	DIFFUSER	MAS	MASONRY	VP	VENEER PLASTER
DIM	DIMENSION	MAT	MATERIAL	VT	VINYL TILE
DISP	DISPOSAL	MAX	MAXIMUM	VWC	VINYL WALL COVERING
DL	DEAD LOAD	MCW	MINERAL CORE WOOD		
DN	DOWN	MDF	MEDIUM DENSITY FIBERBOARD		(W)
DR	DOOR / DRAIN	MDO	MEDIUM DENSITY OVERLAY	W	WEST / WATT
DS	DOWNSPOUT	MECH	MECHANICAL	W/O	WITHOUT
DSP	DRY STAND PIPE	MEMB	MEMBRANE	W/	WITH
DWG	DRAWING	MTL	METAL	WAIN	WAINSCOT
DWR	DRAWER	MEZZ	MEZZANINE	WC	WATER CLOSET
		MFR	MANUFACTURER	WD	WOOD
	(E)	MG	MIRROR GLASS	WIN	WINDOW
E	EAST	MH	MANHOLE	WF	WIDE FLANGE
EA	EACH	MR	MIRROR	WG	WIRE GLASS / WIRE GAUGE
EB	EXPANSION BOLT	MO	MASONRY OPENING	WSH	CLOTHES WASHER
EJ	EXPANSION JOINT	MOD	MODULES / MODIFY	WH	WATER HEATER
EL	ELEVATION	MAS	MACHINE SCREW	WP	WATER PROOF / WORK POINT
ELEC	ELECTRICAL	MTD	MOUNTED	WR	WASTE RECEPTACLE
ELEV	ELEVATOR	MUL	MULLION	WT	WEIGHT
EMERG	EMERGENCY				
ENAM	ENAMEL		(N)		
ENTR	ENTRANCE	N	NORTH		
EP	ELECTRICAL PANEL / END PANEL	(N)	NEW		
		N.I.C	NOT IN CONTRACT		
EQ	EQUAL / EQUIVALENT / EARTHQUAKE	NO	NUMBER		
		NOM	NOMINAL		
EQJ	EARTHQUAKE JOINT	NTS	NOT TO SCALE		
EQUIP	EQUIPMENT				
ETR	EXISTING TO REMAIN		(O)		
EWC	ELECTRICAL WATER CODER	O/	OVER		
EXC	EXCAVATION	OA	OVERALL		
EXH	EXHAUST	OC	ON CENTER		
EXP	EXPANSION	OD	OUTSIDE DIAMTER		
EXST (E)	EXISTING	OFD	OVERFLOW DRAIN		
EXT	EXTERIOR	OPNG	OPENING		
		OPP	OPPOSITE		
	(F)	OSB	ORIENTED STRAND BOARD		
F	FAHRENHEIT				
FA	FIRE ALARM / FORCED AIR		(P)		
FAB	FABRICATE	PB	PEGBOARD		
FB	FLAT BAR	PBB	PLASTER BASEBOARD		
FBD	FIBER BOARD	PBD	PARTICLE BOARD		
FD	FLOOR DRAIN	PC	PRECAST		
FDC	FIRE DEPARTMENT CONNECTION	PCD	PAPER CUP DISPENSER		
		PERF	PERFORATED		
FDN	FOUNDATION	PG	PLATE GLASS		
FE	FIRE EXTINGUISHER	PH	PHASE		
FEC	FIRE EXTINGUISHER CABINET	PL	PLATE		
FF	FACTORY FINISH	PLAM	PLASTIC LAMINATE		
FG	FIBERGLASS	PLAS	PLASTER		
FH	FLATHEAD	PLY	PLYWOOD		
FHC	FIRE HOSE CABINET	PNL	PANEL		
FHMS	FLATHEAD MACHINE SCREW	PNT	PAINT		
FHWS	FLATHEAD WOOD SCREW	POL	POLISH		
FIC	FURNISHED / INSTALLED BY CONTRACTOR	PP	PUSH PLATE		
		PR	PAIR		
FIN	FINISH	PREFAB	PREFABRICATED		
FIO	FINISH INSTALLED BY OWNER	PT	PRESSURE TREATED		
FIT	FINISH INSTALLED BY TENANT	PTD	PAPER TOWEL DISPENSER		
FL	FLOOR	PTDW	PAPER TOWEL DISPENSER AND WASTE		
FLASH	FLASHING	PTN	PARTITION		
FLOUR	FLOURESCENT				
FM	FROM FACTORY				
FOB	FACE OF BRICK				

FIRE AUTHORITY NOTES

01 OCFA FINAL INSPECTION REQUIRED. PLEASE SCHEDULE ALL FIELD INSPECTIONS AT LEAST 48 HOURS IN ADVANCE. INSPECTIONS CANCELLED AFTER 1 P.M. ON THE DAY BEFORE THE SCHEDULED DATE WILL BE SUBJECT TO A REINSPECTION FEE. PHASING OF INSPECTIONS MAY REQUIRE ADDITIONAL FEES, ALSO. CALL OCFA INSPECTION SCHEDULING AT 714-573-6150.

02 BUILDINGS UNDERGOING CONSTRUCTION, ALTERATION OR DEMOLITION SHARE BE SUBJECT TO THE REQUIREMENTS OF THE CFFC CHAPTER 33.

03 IN BUILDINGS FOUR OR MORE STORIES IN HEIGHT, STANDPIPES SHALL BE PROVIDED DURING CONSTRUCTION WHEN THE HEIGHT REACHES 40 FEET ABOVE THE LOWEST POINT OF FIRE DEPARTMENT ACCESS. A FIRE DEPARTMENT CONNECTION SHALL BE NO MORE THAN 100 FEET FROM AVAILABLE FIRE DEPARTMENT VEHICLE ACCESS ROADWAYS. A HYDRANT SHALL BE LOCATED ALONG THE ACCESS ROADWAY WITHIN 150 FEET OF THE LOCATION(S) THAT THE FDC CAN BE ACCESSED FROM. CFC 3310, 3313.

04 ADDRESS NUMBERS SHALL BE PROVIDED FOR ALL NEW AND EXISTING BUILDINGS, BE A MINIMUM OF FOUR INCHES HIGH FOR INDIVIDUAL DWELLING UNITS AND SIX INCHES HIGH FOR ALL OTHER INSTALLATIONS AND STRUCTURES, CONTRAST WITH THEIR BACKGROUND, AND BE PLAINLY VISIBLE FROM THE ROADWAY THE BUILDING IS ADDRESSED ON. TEMPORARY ADDRESS NUMBERS SHALL BE PROVIDED ON CONSTRUCTION FENCING OR THE BUILDING UNTIL PERMANENT NUMBERS CAN BE PROVIDED. CBC 501.2, CFC 505.1.

05 LOCATIONS AND CLASSIFICATIONS OF EXTINGUISHERS SHALL BE IN ACCORDANCE WITH CFC 906 AND CCR TITLE 19. AT LEAST ONE EXTINGUISHER SHALL BE PROVIDED DURING CONSTRUCTION ON EACH FLOOR AT EACH STAIRWAY, IN EACH STORAGE AND CONSTRUCTION SHED, IN LOCATIONS WHERE FLAMMABLE OR COMBUSTIBLE LIQUIDS ARE STORED OR USED, OR WHERE SIMILAR HAZARDS ARE PRESENT PER CFC 3315.1. BEFORE FINAL OCCUPANCY, AT LEAST ONE 2A:10B:C EXTINGUISHER SHALL BE PROVIDED SO THAT NO POINT IS MORE THAN 75' TRAVEL DISTANCE FROM THE EXTINGUISHER. EXTINGUISHERS SHALL BE LOCATED ALONG THE PATH OF EGRESS TRAVEL AND IN A READILY VISIBLE AND ACCESSIBLE LOCATION, WITH THE BOTTOM OF THE EXTINGUISHER AT LEAST 4" ABOVE THE FLOOR. ADDITIONAL EXTINGUISHERS MAY BE REQUIRED BY OCFA INSPECTORS DEPENDING ON PROJECT OR SITE CONDITIONS AND FINAL PLACEMENT IS SUBJECT TO THEIR APPROVAL.

06 WALL, FLOOR AND CEILING FINISHES AND MATERIALS SHALL NOT EXCEED THE FLAME SPREAD CLASSIFICATIONS IN CBC TABLE 803.13. DECORATIVE MATERIALS SHALL BE PROPERLY TREATED BY A PRODUCT OR PROCESS APPROVED BY THE STATE FIRE MARSHAL WITH APPROPRIATE DOCUMENTATION PROVIDED TO THE OCFA. SUCH ITEMS SHALL BE APPROVED AND INSPECTED BY THE OCFA PRIOR TO INSTALLATION.

07 KNOX BOXES / KEY CABINETS SHALL BE PROVIDED FOR ALL HIGH-RISE BUILDINGS, POOL ENCLOSURES, GATES IN THE PATH OF FIREFIGHTER TRAVEL TO STRUCTURES, SECURED PARKING LEVELS, DOORS GIVING ACCESS TO ALARM PANELS AND/OR ANNUNCIATORS, AND ANY OTHER STRUCTURES OR AREAS WHERE IMMEDIATE ACCESS IS REQUIRED OR IS UNDULY DIFFICULT. AN OCFA INSPECTOR CAN ASSIST WITH LOCKIN GATE KEYS IN KNOX BOXES. CONTACT YOUR LOCAL FIRE STATION TO ARRANGE AN APPOINTMENT TO SECURE MASTER BUILDING KEYS IN THE KNOX BOX.

08 APPROVAL OF THESE PLANS SHALL NOT PERMIT THE VIOLATION OF ANY CODE OR LAW. REQUIREMENTS OR FEATURES NOT IDENTIFIED ON THE PLAN MAY APPLY AND OCFA INSPECTORS MAY REQUIRE ADDITIONAL INFORMATION OR ITEMS FROM THOSE SHOWN ON THE PLANS DURING ON ACTUAL OR ANTICIPATED FIELD CONDITIONS. SUCH CHANGES MAY NECESSITATE SUBMITTAL OF REVISED OR AS-BUILT PLANS TO THE OCFA AND THE CITY / COUNTY WHERE THE PROJECT IS LOCATED.

09 THE PROJECT SHALL COMPLY WITH 2019 CALIFORNIA BUILDING CODE, 2019 CALIFORNIA FIRE CODE, AND OTHER CURRENTLY ADOPTED CODES, STANDARDS, REGULATIONS AND REQUIREMENTS AS ENFORCED BY THE ORANGE COUNTY FIRE AUTHORITY.

10 DUMPSTERS AND TRASH CONTAINERS EXCEEDING 1.5 CUBIC YARDS SHALL NOT BE STORED IN BUILDINGS OR PLACED WITHIN 5 FEET OF COMBUSTIBLE WALLS, OPENINGS OR COMBUSTIBLE ROOF EAVE LINES UNLESS PROTECTED BY AN APPROVED SPRINKLER SYSTEM OR LOCATED IN A TYPE I OR IIA STRUCTURE SEPARATED BY 10 FEET FROM OTHER STRUCTURES. CONTAINERS LARGER THAN 1 CUBIC YARD SHALL BE OF NON- OR LIMITED-COMBUSTIBLE MATERIALS OR SIMILARLY PROTECTED OR SEPARATED. CFC 304.3

11 EXITS, EXIT SIGNS, FIRE ALARM PANELS, HOSE CABINETS, FIRE EXTINGUISHER LOCATIONS, AND STANDPIPE CONNECTIONS SHALL NOT BE CONCEALED BY CURTAINS, MIRRORS, OR OTHER DECORATIVE MATERIAL.

12 THE EGRESS PATH SHALL REMAIN FREE AND CLEAR OF ALL OBSTRUCTIONS AT ALL TIMES. NO STORAGE IS PERMITTED IN AISLES.

13 EXIT DOORS SHALL BE OPENABLE FROM THE INSIDE WITHOUT THE USE OF A KEY OR ANY SPECIAL KNOWLEDGE OR EFFORT. DOORS SHALL NOT BE PROVIDED WITH THUMB-TURN LOCKS OR DEADBOLTS THAT DO NOT UNLATCH IN TANDEM WITH THE NORMAL OPERATING LEVER. THE OPENING FORCE FOR INTERIOR DOORS SHALL NOT EXCEED 5 POUNDS. THE UNLATCHING AND OPENING FORCE FOR OTHER DOORS, INCLUDING FIRE DOORS, SHALL NOT EXCEED 15 POUNDS, CBC 1010.

14 THE EXIT PATH SHALL BE CLEARLY IDENTIFIED WITH EXIT SIGNS CONFORMING TO CBC 1013. ILLUMINATED EXIT SIGNS MUST HAVE 90-MINUTE EMERGENCY POWER BACK-UP.

15 TACTILE SIGNS SHALL BE PROVIDED IN COMMERCIAL BUILDINGS, PUBLIC BUILDINGS / ACCOMMODATIONS, AND PUBLICLY FUNDED HOUSE SUBJECT TO CBC CHAPTERS 11A AND B AND CONFORM TO 11A3A OR 11B-703.1, -703.2, -703.3, AND -703.5, BE MOUNTED WITH THE BOTTOM OF THE LOWEST LINE OF RAISED CHARACTERS AT LEAST 4 FEET ABOVE THE FLOOR BUT THE BOTTOM OF THE HIGHEST LINE OF RAISED TEXT CHARACTERS NO MORE THAN 5 FEET ABOVE THE FLOOR AND, WHENEVER POSSIBLE, ON THE STRIKE SIDE OF THE DOOR. LETTERING SHALL BE BETWEEN 5/8" AND 2" HIGH. CBC 1013.4.

16 STAIRS SERVING 4+ STORIES SHALL HAVE STAIRWELL SIGNS CONFORMING TO CBC 1023.9 AND OCFA GUIDELINE E-02.

17 THE EXIT PATH SHALL BE ILLUMINATED AT ALL TIMES IN ACCORDANCE WITH CBC 1008. EMERGENCY LIGHTING SHALL BE PROVIDED WITH 90-MINUTE BACK-UP.

18 RATED ASSEMBLIES SHALL CONFORM TO APPROVED METHODS AND MATERIALS OF CONSTRUCTION. PENETRATIONS THROUGH RATED WALLS, CEILINGS, OR FLOORS SHALL BE PROTECTED IN AN APPROVED MANNER COMPLYING WITH CBC / CFC CHAPTER 7.

19 RATED DOORS SHALL BE SELF-CLOSING AND LATCHING. SUCH DOORS SHALL NOT BE EQUIPPED WITH DOOR STOPS OR OTHERWISE PROPPED OPEN. RATED DOORS SHALL BE EQUIPED WITH RATED HARDWARE. CFC 716.

20 OCCUPANT LOAD SIGN, WITH MINIMUM ONE-INCH LETTERS AND NUMBERS CONTRASTING WITH THEIR BACKGROUND, SHALL BE POSTED IN A CONSPICUOUS LOCATION NEAR THE MAIN EXIT PER CBC 1004.9 AND TITLE 19 3.30. WHERE MULTIPLE SEATING CONFIGURATIONS OR USERS ARE ANTICIPATED, SEATING DIAGRAMS AND THEIR RESPECTIVE OCCUPANT LOADS MAY ALSO BE REQUIRED TO BE POSTED.

21 PANIC HARDWARE SHALL BE PROVIDED FOR ALL EXIT AND EXIT ACCESS DOORS IN ASSEMBLY OCCUPANCIES. SUCH DOORS SHALL SWING IN THE DIRECTION OF EXIT TRAVEL. DOORS EQUIPPED WITH PANIC HARDWARE SHALL HAVE NO OTHER LOCK OR LATCH EXCEPT PANIC HARDWARE. IF PANIC HARDWARE IS OMITTED ON THE MAIN DOOR WHEN PERMITTED BY CBC 1010.1.9.4, A SIGN STATING "THIS DOOR TO REMAIN UNLOCKED WHEN BUILDING IS OCCUPIED" IN MINIMUM 1 INCH LETTERS CONTRASTING WITH THEIR BACKGROUND SHALL BE POSTED IN A CONSPICUOUS LOCATION ON OR ADJACENT TO THE DOOR AND THE DOOR SHALL BE EQUIPPED ONLY WITH A KEY-OPERATED LOCK THAT VISUALLY INDICATES WHETHER IT IS OPEN OR LOCKED.

22 TABLES SHALL BE SPACED AT LEAST 50 INCHES APART WHERE SEATING IS BACK TO BACK AND AISLE ACCESSWAYS SERVE MORE THAN 4 OCCUPANTS OR ARE LONGER THAN SIX FEET. AISLE WIDTHS SHALL BE MINIMUM OF 36 INCHES WHERE SEATING IS ONLY ON ONE SIDE OF THE AISLE OR 42 INCHES FOR SEATING ON BOTH SIDES. WHERE SEATS BACK UP INTO AISLES, SEAT BACKS SHALL BE LOCATED AT 19 INCHES FROM THE TABLE EDGE AND THE CLEAR AISLE WIDTH SHALL BE MEASURED FROM THE BACK OF THE SEAT. CBC 1029.13.

23 OPEN FLAME IN ASSEMBLY AREAS IS PROHIBITED EXCEPT AS SPECIFICALLY PERMITTED BY OCFA IN COMPLIANCE WITH CFC CHAPTER 3.

24 AN AUTOMATIC FIRE SPRINKLER SHALL BE PROVIDED THROUGHOUT THE BUILDING IN COMPLIANCE WITH CFC 903 AND THE APPLICABLE 2016 NFPA 13 SPRINKLER STANDARD. REVIEW AND APPROVAL OF A SPRINKLER PLAN IS REQUIRED PRIOR TO INSTALLATION OR MODIFICATION.

25 AN AUTOMATIC EXTINGUISHING SYSTEM SHALL BE PROVIDED TO PROTECT COMMERCIAL - TYPE FOOD HEATING EQUIPMENT THAT PRODUCES GREASE - LADEN VAPORS AND SHALL COMPLY WITH 2019 CFC AND CMC AND 2017 NFPA 13. REVIEW AND APPROVAL OF A HOOD AND DUCT EXTINGUISHING SYSTEM PLAN IS REQUIRED PRIOR TO INSTALLATION OR USE OF COOKING EQUIPMENT.

26 A FIRE ALARM SYSTEM SHALL BE PROVIDED IN COMPLIANCE WITH CBC / CFC 907 AND 2016 NFPA 72. A SEPARATE PLAN SUBMITTAL IS REQUIRED FOR APPROVAL PRIOR TO INSTALLATION OR MODIFICATION.

27 AUTOMATIC FIRE SPRINKLER SYSTEM(S) AND ALL CONTROL VALVES, WITH THE EXCEPTION OF THOSE LISTED IN CFC 903.4, SHALL BE MONITORED BY A UL LISTED CENTRAL ALARM STATION.

28 STORAGE, DISPENSING, OR USE OF ANY HAZARDOUS MATERIALS SHALL COMPLY WITH CBC 414 AND 415 AND CFC REGULATIONS. THE STORAGE AND USE OF HAZARDOUS MATERIALS SHALL BE REVIEWED AND APPROVED BY THE OCFA PRIOR TO SUCH MATERIALS BEING BROUHT ON SITE. APPROPRIATE HAZARDOUS MATERIALS WARNING SIGNS SHALL BE PROMINENTLY PLACED IN THE VACINITY / ENTRANCES TO AREAS WHERE HAZARDOUS MATERIALS ARE STORED IN QUANTITIES SUFFICIENT TO REQUIRE A CFC PERMIT.

29 HAZARDOUS PROCESSES AND EQUIPMENT (E.G., STORAGE TANKS, REFRIGERATION, VAPOR RECOVERY, SPRAY BOOTHS AND DRYING ROOMS, DIP TANKS, INDUSTRIAL OVENS, DUST COLLECTION SYSTEMS, MEDICAL / INDUSTRIAL GAS SYSTEMS, ETC) SHALL BE REVIEWED AND APPROVED BY THE OCFA PRIOR TO INSTALLATION. SUCH EQUIPMENT AND PROCESSES MAY REQUIRE SPECIFIC BUILDING FEATURES AND PROTECTION BEYOND WHAT IS IDENTIFIED ON THIS PLAN.

CITY OF DANA POINT
PLANNING DIVISION

This plan has been reviewed for ZONING ONLY and meets the requirements of Title 9 of the Dana Point Municipal Code.

APPROVED KBN

DATE 10/21/24

COMMENTS BUILDING 12 (OC PERMIT PKG21-0916) PER CDP13-0018(I).

PROJECT DESCRIPTION

THE DANA POINT HARBOR COMMERCIAL CORE PROJECT IS LOCATED IN AN UNINCORPORATED AREA IN THE COUNTY OF ORANGE, CALIFORNIA, SOUTH OF DANA POINT HARBOR DRIVE, BETWEEN CASITAS PLACE AND 300-FEET EAST OF GOLDEN LANTERN. THE IMPROVEMENTS INCLUDE: PHASED DEMOLITION OF EXISTING BUILDINGS, REMODELING OF EXISTING BUILDINGS NO. 2 THROUGH 5, IMPROVEMENTS OF PRIVATE ROADS, NEW ACCESS ROADS, CONSTRUCTION OF NEW 3-LEVEL PARKING STRUCTURE AND CONSTRUCTION OF NEW BUILDINGS NO. 1 AND NO. 6 THROUGH 12, AND ALL OTHER INFRASTRUCTURE REQUIRED FOR PROPOSED DEVELOPMENT. PROPOSED BUILDING USES INCLUDE RESTAURANT, RETAIL, AND OFFICE SPACES.

SCOPE OF WORK

A NEW GROUND UP TWO-STORY MIXED-USE COMMERCIAL BUILDING AT 10,730 SF TO PROVIDE FUTURE RESTAURANTS. THE SCOPE OF WORK ALSO INCLUDES NEW SHELL, AND PUBLIC RESTROOMS WITH MEP, FOR GENERAL AREAS ONLY.

APN #: 682-022-16
ZONING: DP HARBOR PLANNED COMMUNITY (DPHPC)

GENERAL NOTES

01 PROJECT TO COMPLY WITH APPLICABLE CODES AND STANDARDS, WHICH INCLUDE:
02 2019 CALIFORNIA BUILDING CODE AND ITS APPENDICES AND STANDARDS
03 2019 CALIFORNIA PLUMBING CODE AND ITS APPENDICES AND STANDARDS
04 2019 MECHANICAL CODE AND ITS APPENDICES AND STANDARDS
05 2019 ELECTRICAL CODE AND ITS APPENDICES AND STANDARDS
06 2019 FIRE CODE AND ITS ADOPTED APPENDICES AND STANDARDS
07 2019 CALIFORNIA BUILDING EFFICIENCY CODES AND ITS APPENDICES AND STANDARDS
08 2019 GREEN BUILDING STANDARDS CODE AND ITS APPENDICES AND STANDARDS
09 ALL WORK DESCRIBED IN THE DRAWINGS SHALL BE VERIFIED FOR DIMENSION, GRADE, EXTENT, AND COMPATIBILITY WITH EXISTING SITE CONDITIONS. ANY DISCREPANCIES AND UNEXPECTED CONDITIONS THAT AFFECT OR CHANGE THE WORK DESCRIBED IN THE CONTRACT DOCUMENTS SHALL BE BROUGHT TO THE ARCHITECTS / OWNER IMMEDIATE ATTENTION. DO NOT PROCEED WITH THE WORK IN THE AREA OF DISCREPANCIES UNTIL ALL SUCH DISCREPANCIES ARE RESOLVED. IF THE CONTRACTOR CHOOSES TO DO SO, HE/SHE SHALL BE PRECEDING AT HIS/HER OWN RISK.
10 DIMENSIONS SHOWN SHALL TAKE PRECEDENCE OVER DRAWING SCALE OR PROPORTION. LARGER SCALE DRAWINGS SHALL TAKE PRECEDENCE OVER SMALLER SCALE DRAWINGS.
11 IN THE EVENT OF THE UNFORESEEN ENCOUNTER OF MATERIALS SUSPECTED TO BE OF AN ARCHEOLOGICAL OR PALEONTOLOGICAL NATURE, ALL GRADING, EXCAVATION AND CONSTRUCTION SHALL CEASE IN THE IMMEDIATE AREA, AND THE CONTRACTOR SHALL NOTIFY THE OWNER. THE FIND SHALL BE LEFT UNTOUCHED UNTIL AN EVALUATION BY A QUALIFIED ARCHAEOLOGIST OR PALEONTOLOGIST IS MADE.
12 CONTRACTOR IS TO BE RESPONSIBLE FOR BEING FAMILIAR WITH THESE DOCUMENTS INCLUDING ALL CONTRACT REQUIREMENTS.
13 GRADING PLANS, DRAINAGE IMPROVEMENTS, ROAD AND ACCESS REQUIREMENTS AND ENVIRONMENTAL HEALTH CONSIDERATIONS SHALL COMPLY WITH ALL LOCAL ORDINANCES.
14 FIRE SPRINKLER SHOP DRAWINGS AND CALCULATIONS SHALL BE SUBMITTED TO THE BUILDING DEPARTMENT AND APPROVED BY FIRE DEPARTMENT PRIOR TO INSTALLATION.
15 SHOP WELDS MUST BE PERFORMED BY A LICENSED FABRICATOR.
16 CONTRACTOR TO PROVIDE COMPLETE DETAILS OF ENGINEERED TEMPORARY SHORING OR SLOT CUTTING PROCEDURES ON PLANS. CALL FOR INSPECTION BEFORE EXCAVATION BEGINS.
17 THE SOILS ENGINEER IS TO APPROVE THE KEY OR BOTTOM AND LEAVE A CERTIFICATE ON THE SITE FOR THE GRADING INSPECTOR. THE GRADING INPECTOR IS TO BE NOTIFIED BEFORE ANY GRADING BEGINS, AND FOR BOTTOM INSPECTION, BEFORE FILL IS PLACED. FILL MAY NOT BE PLACED WITHOUT APPROVAL OF THE GRADING INSPECTOR.
18 CONTRACTOR TO REVIEW CALIFORNIA GREEN CODE REQUIREMENTS FOR CONTRACTOR REQUIREMENTS.
19 A SEPERATE OFFICE ACCESS EASEMENT / AGREEMENT, AND / OR RECIPROCAL ACCESS EASEMENT / AGREEMENT MAY BE REQUIRED TO INSURE THAT THE PROPOSED PRIVATE ACCESS ROADWAY WILL REMAIN OPEN TO THROUGH TRAFFIC AND EMERGENCY VEHICLES PRIOR TO FINAL OF BUILDING PERMIT.
20 PROVIDE FIRE ALARMS SYSTEM. FIRE ALARM SYSTEM SHALL ACTIVATE UPON FIRE SPRINKLER SYSTEM OPERATION.
21 NO REVISIONS SHALL BE MADE TO THESE PLANS WITHOUT THE APPROVAL OF THE ARCHITECT OF RECORD.
22 ANY CONTRACTOR PERFORMING WORK AS INDICATED HEREON FOR THIS PROJECT SHALL FAMILIARIZE HIMSELF WITH THE SITE AND SHALL BE SOLELY RESPONSIBLE FOR ANY AND ALL DAMAGE TO THE EXISTING FACILITIES RESULTING DIRECTLY OR INDIRECTLY FROM HIS OPERATIONS. WHETHER OR NOT SUCH FACILITIES ARE SHOWN ON THESE PLANS.
23 THE CONTRACTOR'S ATTENTION IS EXPRESSLY DIRECTED TO ALL THE REQUIREMENTS AND PROVISIONS OF THE STATE OF CALIFORNIA SAFETY REGULATIONS. PERFORMANCE THERETO SHALL BE STRICTLY ENFORCED DURING THE ENTIRE LIFE OF THE CONTRACT
24 THE CONTRACTOR SHALL DISPOSE OF ALL SURPLUS EARTH EXCAVATION OUTSIDE OF THE PROJECT AREA UNLESS APPROVED OTHERWISE BY THE ENGINEER OF RECORD. ALL ASPHALT, CONCRETE AND/OR PORTLAND CEMENT CONCRETE REMOVALS ARE TO BE DISPOSED OF OFF-SITE.
25 THE CONTRACTOR SHALL ENACT ALL MEASURES TO PROTECT AND SAFEGUARD WORKERS AND THE GENERAL PUBLIC FROM INJURY DURING THE ENTIRE TIME OF CONSTRUCTION; MAINTAIN THE JOB SITE IN AN ORDERLY, CLEAN MANNER, THROUGHOUT THE COURSE OF WORK AND NOT BLOCK LEGAL EXITS, AND ENTRANCES. LEAVE WORK AREAS CLEAN, FREE OF DEBRIS AT END OF EACH DAY AND COMPLY WITH ALL APPLICABLE CODES.
26 THE CONTRACTOR SHALL ADJUST ALL UTILITY VALVE BOXES, MANHOLES, ETC, TO GRADE UPON COMPLETION OF PAVING. ASPHALTIC CONCRETE PAVEMENT SHALL ONLY BE USED TO PATCH AROUND RAISED UTILITIES IN ASPHALT STREETS.
27 BARRICADES WITH FLASHING LIGHTS ARE TO BE MAINTAINED ON ALL OBSTRUCTIONS WITHIN THE EXISTING STREET AT ALL TIMES. CONSTRUCTION WARNING SIGNS AND FLAGMEN ARE TO BE PRESENT AT THE JOB SITE.
28 UPON COMPLETION OF THIS PROJECT, THE CONTRACTOR SHALL BE RESPONSIBLE FOR REPAIRING ANY DAMAGE INCURRED DUE TO HIS/HER OPERATIONS.
29 THE SANITARY SEWER, STORM DRAIN SYSTEM, WATER MAINS, GAS MAINS, AND ALL OTHER UNDERGROUND UTILITIES SHALL BE PLACED UNDERGROUND PRIOR TO PAVING CONSTRUCTION.
30 ALL DELETERI

CITY OF DANA POINT
PLANNING DIVISION
This plan has been reviewed for ZONING ONLY and meets the requirements of Title 9 of the Dana Point Municipal Code.
APPROVED_KBN
DATE 10/21/24
COMMENTS BUILDING 12 (OC PERMIT PKG21-0516) PER CDP13-0018().

Zoning: CanningK 11/13/2024

Building&Safety: OCPWAzarvandB 12/22/2025

Permits: BNR21-0246, ELE21-0853, MEC21-0514, PLB21-0900

County of Orange - OC Public Works
OC Development Services
APPROVED
This set of plans and specifications must be kept on the job at all times. It is unlawful to make any changes or alterations to these plans without written permission from OC Public Works, OC Development Services of Orange County. The stamping of these plan specifications SHALL NOT be held to permit or be an approval of the violation of any provisions of any County Ordinance or State law.
Hadi Tabatabaee
BUILDING OFFICIAL

TAIT
RISING TO THE CHALLENGE
701 N. Parkcenter Drive, Santa Ana, CA 92705
p:714/560/8200 www.tait.com

November 3, 2022

Orange County Fire Authority
Planning & Development Services
PO Box 57115
Irvine, CA 92619-7115

SUBJECT: AM&M Proposal for Dana Point Commercial Core
24650 Dana Point Harbor Drive, City of Dana Point
OCFA Service Request Number 283967

In accordance with Section 104.9 of the 2019 California Fire Code, we are requesting an alternate method of fire protection for the proposed project indicated above. This is in response to item 15 on the March 26, 2020 correction letter for the site plan submitted under Service Request #283967.

PROJECT DESCRIPTION
The Dana Point Harbor Commercial Core project is located in the City of Dana Point, south of Dana Point Harbor Drive, between Casitas Place and 300-feet east of Golden Lantern. The improvements include: phased demolition of existing buildings, remodeling of existing Buildings No. 2 through 5, improvements of private roads, realignment of Harbor Way (formerly Golden Lantern), new access roads, construction of a new 3-level parking structure and construction of new Buildings No. 1, 6, 7, 8, 9, 10, 11 and 12, and all other infrastructure required for proposed development. Proposed building uses include restaurant, retail, and office spaces. This property is not located within a Very High Fire Hazard Severity Zone (Non-VHFHSZ). The proposed new buildings will be equipped with an automatic fire sprinkler system in accordance with 2016 NFPA 13. Each building will have a fire riser with a check valve and indicating butterfly valve.

APPLICABLE CODE SECTIONS AND INTENT
CFC Section 503.1.1 and OCFA Guideline B-09 require that all portions of the exterior walls of the first story of the building shall be located within 150-feet from an approved fire apparatus access road as measured by an approved route around the exterior of the building or facility. A facilitated emergency response and firefighting can be conducted through placement of the building or facility near fire apparatus access roads and staging areas.

DEFICIENCY AND PROPOSAL
Due to the nature of the location of waterfront buildings, fire access roads can only be placed at the front of the buildings or facilities. OCFA's 150-feet requirement for "hose pull distance" cannot be met for proposed Buildings 1, 6, 7, 8, 9, 10, 11, and 12. As an alternative, we would like to propose the following:

1. Buildings that are out of hose pull access have increased and improved construction fire resistance (see table below) in addition to all new proposed buildings being equipped with an automatic fire sprinkler system in accordance with 2016 NFPA 13.
2. Prior to the dock improvements, the existing dock FDC and standpipes will be protected in place and removed with the Marina work SR# 535388. In the ultimate condition, there will be four 2.5-inch wharf hydrants along the boardwalk located within approximately 300 feet of each other to the south of proposed Buildings 6-12.

JUSTIFICATION
The applicant is proposing to upgrade the entire infrastructure including new centralized fire ground staging areas with fire department connections, strategically placed to facilitate operations and emergency response times. The upgraded construction type for Buildings 6, 7, 8 and 9 increase the type of construction from Type II-B to II-A, adding fire rated construction to the primary structure resulting in increased fire protection to the structure. Buildings 10, 11, and 12 construction type will be increased from V-B to II-B. Building 1 construction type will be increased from III-B to II-B. This provides non-combustible construction which increases fire protection for the structure. The proposed increase in construction type results in increased protection to the proposed buildings and more time to fight any fire on the property.

Building	Hose Pull Deficiency (ft)	Code Allowed Construction Type	Proposed Construction Type	Allowed Number of Stories	Actual Number of Stories
1	93	V-A	II-B	3	2
6	56	II-B	II-A	3	2
7	90	II-B	II-A	3	2
8	125	II-B	II-A	3	2
9	194	II-B	II-A	3	2
10	123	V-B	II-B	2	1
11	27	V-B	II-B	2	2
12	90	V-B	II-B	2	2

AM&M requirements for construction features will be incorporated into all affected and fire documents and plans submitted for review. Approval will be copied onto said plans. We appreciate your consideration of this proposal. If you have any questions regarding this AM&M proposal, please do not hesitate to contact us at the numbers and emails listed below.

Sincerely,

REGISTERED PROFESSIONAL ENGINEER JACOB VANDERVIS No. C46301 EXP. 12-31-22 CIVIL STATE OF CALIFORNIA

Jacob Vandervis, P.E.
TAIT & Associates, Inc.|714-560-8211
701 N. Parkcenter Drive, Santa Ana, CA 92705

LICENSED ARCHITECT BRANDON DEDMON C-37432 11-30-23 RENEWAL DATE STATE OF CALIFORNIA

Brandon Dedmon
SMS Architects |949-757-3240
18004 Sky Park Cir, Suite 200, Irvine CA 92614

cc: Building Official, Dana Point Building Department
Building Official, County of Orange

ORANGE COUNTY FIRE AUTHORITY
ALTERNATE MATERIALS, DESIGN & METHODS REQUEST — **AM&M**

SECTIONS A, B & C TO BE COMPLETED BY OWNER OR AUTHORIZED REPRESENTATIVE

A. APPLICANT INFORMATION	B. PROJECT INFORMATION	
OWNER'S NAME See attached	PROJECT NAME Dana Point Commercial Core	
APPLICANT'S NAME See attached	PROJECT ADDRESS 24650 Dana Point Harbor Drive, City of Dana Point	
APPLICANT'S PHONE NUMBER See attached	OCCUPANCY CLASSIFICATION See attached	CONSTRUCTION TYPE See attached
APPLICANT'S EMAIL See attached	NUMBER OF STORIES See attached	TOTAL FLOOR AREA See attached

C. PROJECT REQUIREMENTS & PROPOSALS – Attach supporting documents, if any.

CODE REQUIREMENT (Identify code section)
CFC Section 503.1.1 and OCFA Guideline B-09 require that all portions of the exterior walls of the first story of the building shall be located within 150-feet from an approved fire apparatus access road as measured by an approved route around the exterior of the building or facility.

CODE DEFICIENCY (provide brief description)
Due to the nature of the location of waterfront buildings, fire access roads can only be placed at the front of the buildings or facilities. OCFA's 150-feet requirement for "hose pull distance" cannot be met for Buildings 1, 6, 7, 8, 9, 10, 11, and 12.

ALTERNATIVE PROPOSAL (provide brief description)
Buildings that are out of hose pull access have increased and improved construction fire resistance (see table below) in addition to all new propose buildings being equipped with an automatic fire sprinkler system in accordance with 2016 NFPA 13.

JUSTIFICATION (explain how the alternative is equal to or exceeds code requirements)
The applicant is proposing to upgrade the entire infrastructure including new centralized fire ground staging areas with fire department connections, strategically placed to facilitate operations and emergency response times. The upgraded construction type for Buildings 1, 6, 7, 8, 9, 10, 11, and 12 create a separation into different smaller fire areas or smaller "compartments" which can be controlled by fire sprinklers following the requirements of NFPA 13 systems. This proposal facilitates emergency response and firefighting capabilities for the new buildings and 3-level parking structure. AM&M requirements for construction features will be incorporated into all affected building and fire documents and plans submitted for review. Approval will be included on said plans.

The above project does not fully conform to the 2019 California Fire Code. Pursuant to 2019 CFC Chapter 1, Section 104.9, I am requesting approval of an alternative material and/or method of construction to achieve the intent of the provisions of the code and provide at least an equivalent level of protection to that prescribed therein. I understand that approval of this request applies only to this project and shall not be construed as establishing a precedent for other projects. If approved, a copy of this AM&M request form shall be provided on all subsequent plan submittals of this project to the OCFA or Building Department.

SIGNATURE — Tait & Associates, Inc (TITLE & COMPANY) — 11/03/2022 (DATE)

THIS SECTION TO BE COMPLETED BY OCFA

OCFA			OTHER AHJ CONCURRENCE: ☑ REQUIRED ☐ NOT REQUIRED
AM&M SR 283967	ASSOCIATED SR	PR CODE	☑ APPROVED ☐ NOT APPROVED
☑ APPROVED ☐ NOT APPROVED			COMMENTS:
COMMENTS:			EVALUATED BY: ☑ BUILDING OFFICIAL ☐ OTHER:
FIRE SAFETY ENGINEER SIGNATURE — 11/4/2022 DATE			TITLE Hadi Tabatabaee NAME — SIGNATURE — 11-9-22 DATE

REV 8/20/2020

Project Information

Owner
County of Orange, CEO Real Estate Division
Phone: 714-834-3245

Developer
Dana Point Harbor Partners, LLC
Phone: 949-760-9150

Developer's Representative
Burnham-Ward Properties
Phone: 949-760-9150

Applicant
TAIT & Associates, Inc.
Email: dmalott@tait.com
Phone: 714-560-8659

Building	Use	No. of Stories	Square Footage	Building Total SF	Occupancy Type
1	Restaurant	2 [R]	10,001 4,006	14,007	A-2
2	Restaurant	1	3,945	3,945	M
3	Retail	1	2,299	2,299	M
4	Retail	1	4,021	4,021	M
5A	Restaurant	2	3,712 2,056	5,768	A-2
5B	Restaurant & Retail	1	4,075	4,075	A-2 & M
6	Restaurant	2	12,307 6,472	18,779	A-2 & M
7	Restaurant, Office, & Retail	2	6,837 6,697	13,534	B, A-2 & M
8	Restaurant & Retail	2 [R]	7,303 7,033 1,604	15,940	A-2 & M
9	Restaurant & Retail	2	9,434 9,391	18,825	A-2 & M
10	Restaurant	1 [R]	7,390 3,980	11,370	A-2
11	Retail & Museum	2	6,821 4,429	11,250	A-3 & M
12	Restaurant	2	5,733 5,710	11,443	A-2
TOTAL				**135,256**	

[R] = Building includes roof deck

SMS ARCHITECTS
100 Progress | Suite 250
Irvine, California 92618
949.757.3240 | www.sms-arch.com

CONSTANT

DANA POINT HARBOR PARTNERS

PROJECT NAME
DANA POINT HARBOR COMMERCIAL CORE
BUILDING 12
1290 HARBOR WAY
DANA POINT, CA 92629

CLIENT
BURNHAM|WARD PROPERTIES

LICENSED ARCHITECT BRANDON DEDMON No. C-37432 11.30.23 Exp. Date STATE OF CALIFORNIA

No.	DATE	ISSUE
	02/10/2023	100% DESIGN DEVELOPMENT
	03/17/2023	50% CONSTRUCTION DOCUMENTS
A	04/21/2023	COUNTY RESUBMITTAL
B	10/09/2024	CITY PLANNING RESUBMITTAL

DRAWINGS AND WRITTEN MATERIAL APPEARING HEREIN CONSTITUTE ORIGINAL AND UNPUBLISHED WORK OF SMS ARCHITECTS AND MAY NOT BE DUPLICATED, USED OR DISCLOSED WITHOUT WRITTEN CONSENT OF THE ARCHITECT

PROJECT NO 22039
DATE JANUARY 25, 2023
DRAWING TITLE
OCFA AM&M APPROVED LETTER
DRAWING NO.
A0.1.1

C:\Users\Brandi\Documents\22039_DPH_Building 12-Arch_brandi@sms-arch.com.rvt
10/8/2024 5:08:09 PM

CITY OF DANA POINT
PLANNING DIVISION

This plan has been reviewed for ZONING ONLY and meets the requirements of Title 9 of the Dana Point Municipal Code.

APPROVED KBN

DATE 10/21/24

COMMENTS BUILDING 12 (OC PERMIT PKG21-9516) PER CDP13-0018(I).

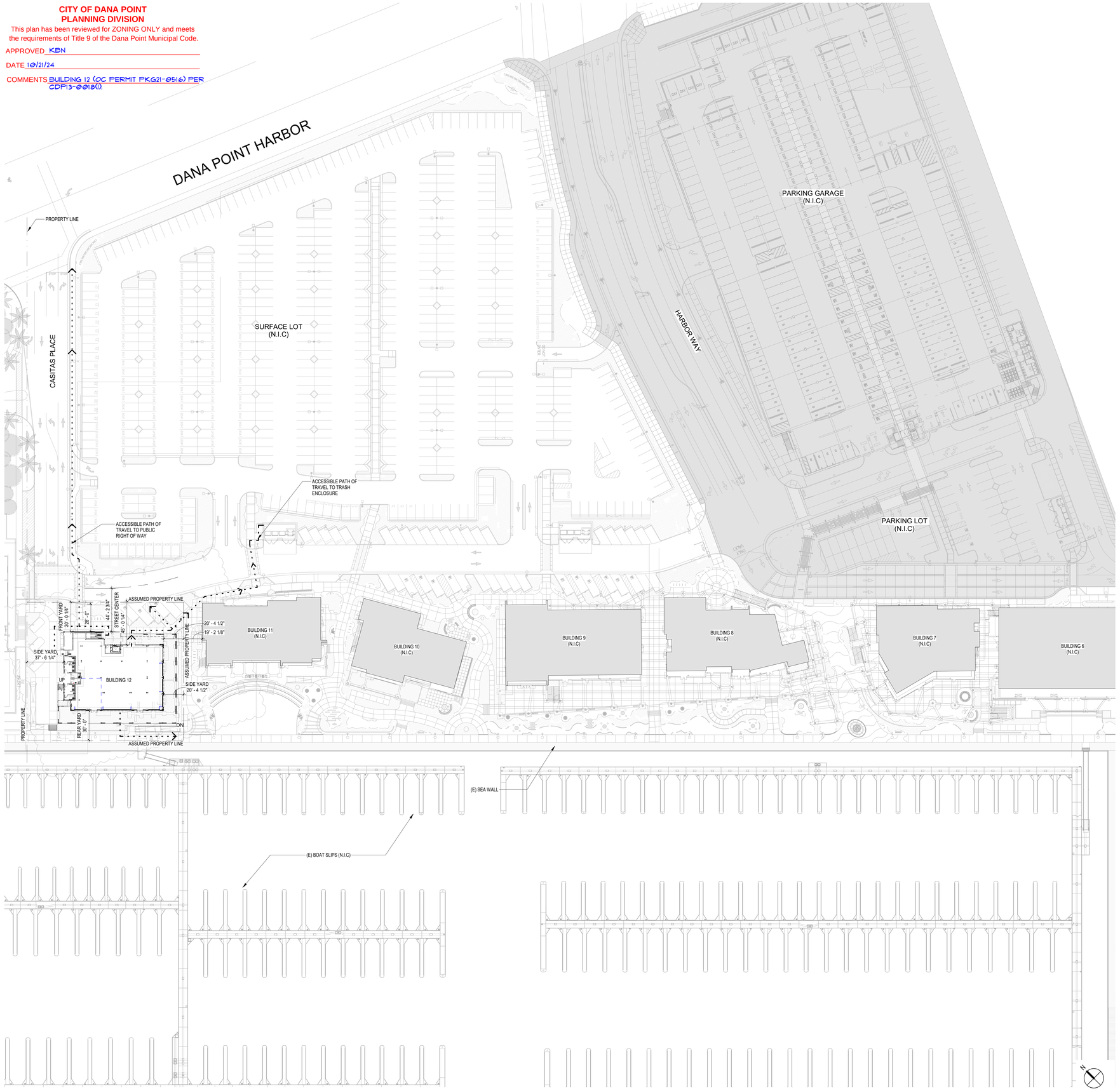

SITE PLAN EGRESS
1" = 40'-0"

8
A3.1.1 | A0.2.0

Zoning: CanningK 11/13/2024

Building&Safety: OCPWAzarvandB 12/22/2025

Permits: BNR21-0246, ELE21-0853, MEC21-0514, PLB21-0900

County of Orange - OC Public Works
OC Development Services
APPROVED

This set of plans and specifications must be kept on the job at all times. It is unlawful to make any changes or alterations to these plans without written permission from OC Public Works, OC Development Services of Orange County. The stamping of these plan specifications SHALL NOT be held to permit or be an approval of the violation of any provisions of any County Ordinance or State law.

Hind Tahtabaee
BUILDING OFFICIAL

CODE SUMMARY

BUILDING CODE	2019 CBC (with City of Dana Point amendments)
FIRE CODE	2019 CFC (with Orange County Fire Authority amendments)
PLUMBING CODE	2019 CPC
MECHANICAL CODE	2019 CMC
ELECTRICAL CODE	2019 CEC
CAL. ENERGY CODE	2019
CAL. GREEN CODE	2019 CGBSC

USE AND OCCUPANCY CLASSIFICATION

PROJECT ADDRESS: 1290 HARBOR WAY, DANA POINT, CA 92629
OCCUPANCY TYPE: A-2
SCOPE OF WORK: NEW TWO-STORY SHELL BUILDING FOR FUTURE RESTAURANT WITH PUBLIC RESTROOM
FIRE SPRINKLERS: YES

BUILDING HEIGHT AND AREAS

ALLOWABLE AREA (PER FLOOR) (TYPE VB)	6,000 SF
AREA MODIFICATION (PER FLOOR) (FRONTAGE INCREASE; SEE BELOW)	10,500 SF
PROPOSED GROSS BUILDING AREA (PER FLOOR)	LEVEL 1: 6,621 SF + LEVEL 2: 3,797 SF
PROPOSED GROSS BUILDING AREA (TOTAL)	10,191 SF
ALLOWABLE HEIGHT (TYPE VB)	60 FEET
ALLOWABLE STORIES (TYPE VB)	2 STORIES
PROVIDED HEIGHT	35 FEET 0 INCHES
PROVIDED STORIES	2 STORIES

FRONTAGE INCREASE

$I_f = [F / P - 0.25] W / 30$ — $A_a = A_t + [NS \times F]$
$I_f = [1 - 0.25] 30 / 30$ — $A_a = 6,000 + (6,000 \times 0.75)$
$I_f = [0.75]$ 1 — $A_a = 6,000 + 4,500$
$I_f = 0.75$ — $A_a = 10,500$ ALLOWABLE AREA (SQUARE FEET)

TYPE OF CONSTRUCTION

CONSTRUCTION TYPE	WHILE THE BUILDING MEETS AREA, HEIGHT, AND NUMBER OF STORIES REQUIREMENTS FOR A TYPE VB BUILDING, TYPE OF CONSTRUCTION HAS BEEN UPGRADED TO TYPE II-B TO COMPENSATE FOR THE FIRE HOSE ACCESS DEFICIENCIES. SEE APPROVED AM&M DOCUMENT ON SHEET A0.1.1

FIRE RESISTANCE RATINGS

PRIMARY STRUCTURE FRAME	0 HOUR
BEARING WALLS	0 HOUR
NONBEARING INTERIOR WALLS	0 HOUR
FLOOR CONSTRUCTION	0 HOUR
ROOF CONSTRUCTION	0 HOUR

FIRE RESISTANCE RATING FOR EXTERIOR WALLS FROM PL

X < 5	1 HOUR
5 ≤ X < 10	1 HOUR
X ≥ 20	0 HOUR
10 ≤ X < 20	0 HOUR

FIRE AND SMOKE PROTECTION FEATURES

ALLOWABLE OPENINGS	
0 TO LESS THAN 3	NOT PERMITTED
3 TO LESS THAN 5	15%
5 TO LESS THAN 10	25%
10 TO LESS THAN 15	NO LIMIT
15 TO LESS THAN 20	NO LIMIT
20 TO LESS THAN 25	NO LIMIT
25 TO LESS THAN 30	NO LIMIT
30 OR GREATER	NO LIMIT
PROVIDED OPENINGS	
NORTH SIDE	UNLIMITED, OVER 10'
EAST SIDE	UNLIMITED, OVER 10'
SOUTH SIDE	UNLIMITED, OVER 10'
WEST SIDE	UNLIMITED, OVER 10'

SHAFT RATING

SHAFT	1 HR FIRE BARRIER WITH 60-MINUTE OPENING PROTECTIVES

INTERIOR FINISHES

CLASS A	FLAME SPREAD INDEX 0-25; SMOKE DEVELOPED INDEX 0-450
CLASS B	FLAME SPREAD INDEX 26-75; SMOKE DEVELOPED INDEX 0-450
CLASS C	FLAME SPREAD INDEX 76-200; SMOKE DEVELOPED INDEX 0-450
INTERIOR EXIT STAIR, RAMP & PASSAGEWAYS	C (FOR GROUP A USE)
CORRIDORS & EXIT ACCESS STAIR/ RAMP	B (FOR GROUP A USE)
ROOMS AND ECLOSED SPACES	C (FOR GROUP A USE)

MEANS OF EGRESS (FOR GROUP A USE)

DEAD-END CORRIDOR LIMIT	20 FEET (FOR GROUP A USE)
MAX. COMMON PATH OF TRAVEL	75 FEET (FOR GROUP A USE)
MAX TRAVEL DISTANCE	250 FEET (FOR GROUP A USE)
CORRIDOR REQUIRED FIRE RATING	0 HOUR (FOR GROUP A USE)

SMS ARCHITECTS
100 Progress | Suite 250
Irvine, California 92618
949.757.3240 | www.sms-arch.com

CONSTANT

DANA POINT HARBOR PARTNERS

PROJECT NAME
DANA POINT HARBOR COMMERCIAL CORE
BUILDING 12
1290 HARBOR WAY
DANA POINT, CA 92629

CLIENT
BURNHAM | WARD PROPERTIES
BWP

LICENSED ARCHITECT
BANDON DEDMON
No. C-37432
11.30.23
Exp. Date
STATE OF CALIFORNIA

No.	DATE	ISSUE
	9/30/2022	50% SCHEMATIC DESIGN
	10/28/2022	100% SCHEMATIC DESIGN
	02/10/2023	100% DESIGN DEVELOPMENT
	03/17/2023	50% CONSTRUCTION DOCUMENTS
A	04/21/2023	COUNTY RESUBMITTAL
B	10/09/2024	CITY PLANNING RESUBMITTAL

DRAWINGS AND WRITTEN MATERIAL APPEARING HEREIN CONSTITUTE ORIGINAL AND UNPUBLISHED WORK OF SMS ARCHITECTS AND MAY NOT BE DUPLICATED, USED OR DISCLOSED WITHOUT WRITTEN CONSENT OF THE ARCHITECT

PROJECT NO 22039

DATE JANUARY 25, 2023

DRAWING TITLE
EXITING PLAN AND CODE ANALYSIS

DRAWING NO.
A0.2.0

C:\Users\Brandi\Documents\22039_DPH_Building 12-Arch_brandi@sms-arch.com.rvt

10/8/2024 5:08:21 PM

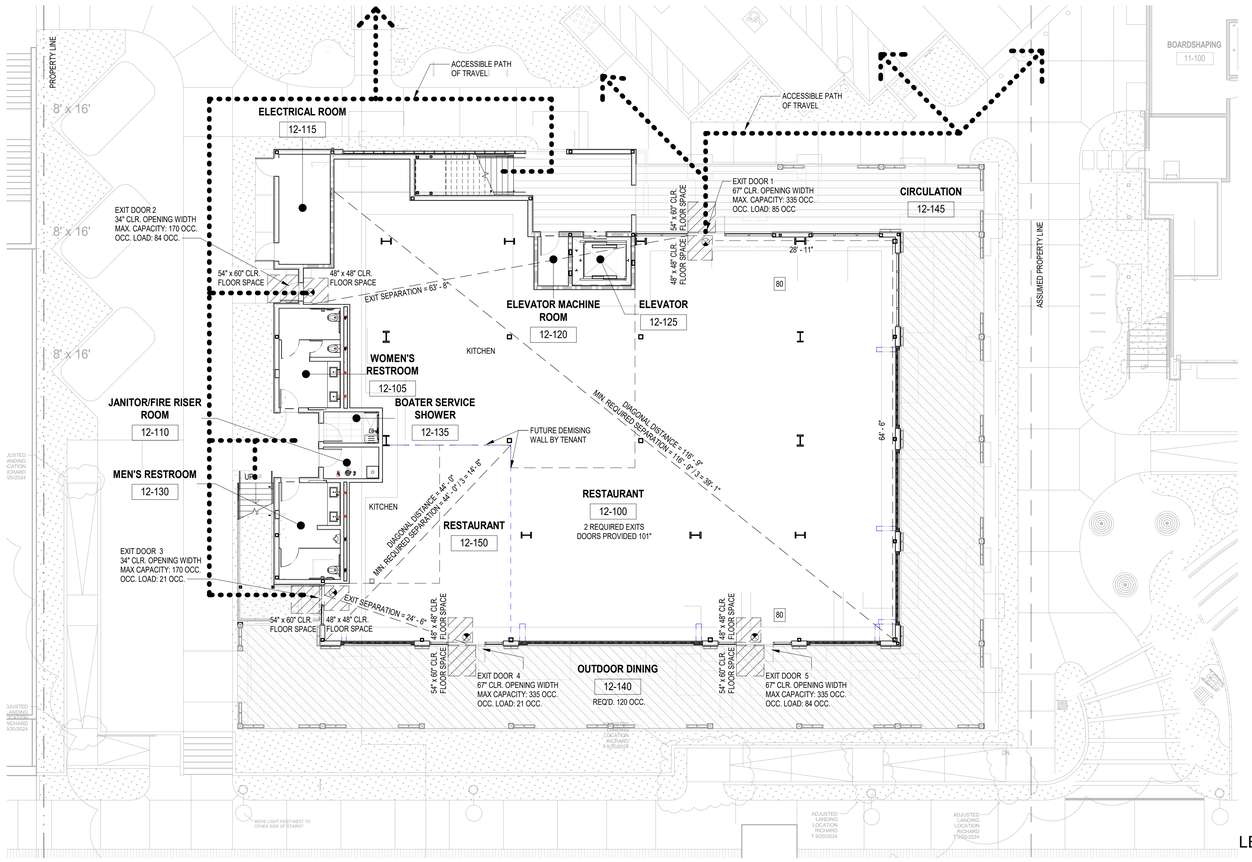

LEVEL 1 EGRESS PLAN 6
1" = 10'-0" A3.1.1 | A0.2.1

DOOR PROVIDED:

EXIT 1	72" WIDE
EXIT 2	36" WIDE
EXIT 3	36" WIDE
EXIT 4	72" WIDE
EXIT 5	72" WIDE

CITY OF DANA POINT
PLANNING DIVISION
This plan has been reviewed for ZONING ONLY and meets the requirements of Title 9 of the Dana Point Municipal Code.
APPROVED KBN
DATE 10/21/24
COMMENTS BUILDING 12 (OC PERMIT PKG21-0516) PER CDP13-0018(I).

Zoning: CanningK 11/13/2024

Building&Safety: OCPWAzarvandB 12/22/2025

Permits: BNR21-0246, ELE21-0853, MEC21-0514, PLB21-0900

County of Orange - OC Public Works
OC Development Services
APPROVED
This set of plans and specifications must be kept on the job at all times. It is unlawful to make any changes or alterations to these plans without written permission from OC Public Works, OC Development Services of Orange County. The stamping of these plan specifications SHALL NOT be held to permit or be an approval of the violation of any provisions of any County Ordinance or State law.
Hind Tahtabaee
BUILDING OFFICIAL

MEANS OF EGRESS (FOR GROUP A USE)

DEAD-END CORRIDOR LIMIT	20 FEET (FOR GROUP A USE)
MAX. COMMON PATH OF TRAVEL	75 FEET (FOR GROUP A USE)
MAX TRAVEL DISTANCE	250 FEET (FOR GROUP A USE)
CORRIDOR REQUIRED FIRE RATING	0 HOUR (FOR GROUP A USE)

BUILDING OCCUPANCY/ EXITING LEVEL 1

NUMBER	ROOM NAME	TOTAL NET FLOOR AREA	ASSEMBLY FLOOR AREA	KITCHEN FLOOR AREA	PRIMARY OCCUPANCY LOAD FACTOR	SECONDARY OCCUPANCY LOAD FACTOR	OCCUPANCY	ASSEMBLY OCCUPANCY	KITCHEN OCCUPANCY	TOTAL OCCUPANTS	EXITS REQUIRED	MIN. DOOR WIDTH REQ. (0.2)
12-100	RESTAURANT	5,428 SF	3,619 SF	1,809 SF	15	200	ASSEMBLY/ KITCHEN	242	10	252	2	50.4
12-105	WOMEN'S RESTROOM	208 SF			0	0	ACCESSORY					
12-110	JANITOR/FIRE RISER ROOM	52 SF			300	0	EQUIPMENT			1	1	0.2
12-115	ELECTRICAL ROOM	176 SF			300	0	EQUIPMENT			1	1	0.2
12-120	ELEVATOR MACHINE ROOM	58 SF			300	0	EQUIPMENT			1	1	0.2
12-125	ELEVATOR	90 SF			0	0	ACCESSORY					
12-130	MEN'S RESTROOM	203 SF			0	0	ACCESSORY					
12-135	BOATER SERVICE SHOWER	51 SF			0	0	ACCESSORY					
12-140	OUTDOOR DINING	2,586 SF	1,724 SF	862 SF	15	0	ASSEMBLY	115	5	120	2	24.0
12-145	CIRCULATION	998 SF			0	0	CIRCULATION					
12-150	RESTAURANT	897 SF	598 SF	299 SF	15	200	ASSEMBLY/ KITCHEN	40	2	42	1	8.4
TOTAL		10,747 SF								417		83.4

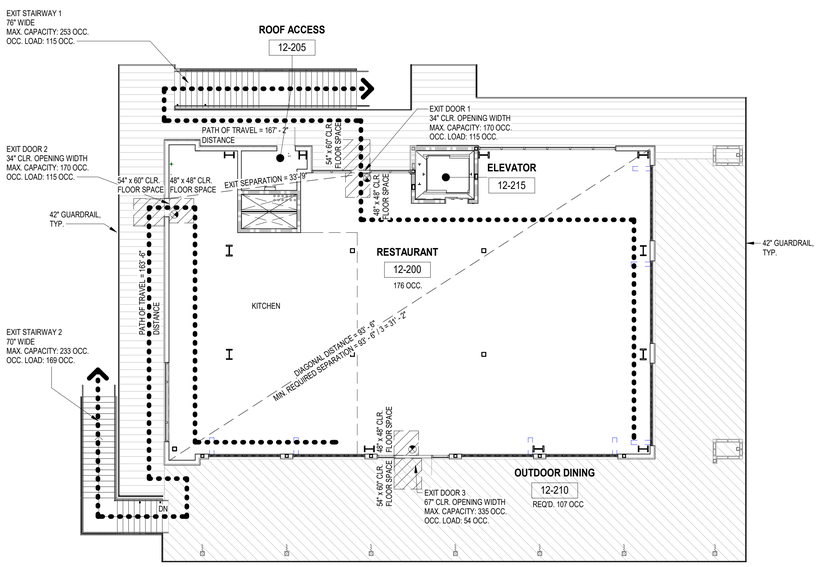

LEVEL 2 EGRESS PLAN 8
1" = 10'-0" A3.1.1 | A0.2.1

DOOR PROVIDED:

EXIT 1	36" WIDE
EXIT 2	36" WIDE
EXIT 3	72" WIDE

STAIRS PROVIDED:

STAIR 1	76" WIDE
STAIR 2	70" WIDE

BUILDING OCCUPANCY/ EXITING LEVEL 2

NUMBER	ROOM NAME	TOTAL NET FLOOR AREA	ASSEMBLY FLOOR AREA	KITCHEN FLOOR AREA	PRIMARY OCCUPANCY LOAD FACTOR	SECONDARY OCCUPANCY LOAD FACTOR	OCCUPANCY TYPE	ASSEMBLY OCCUPANCY	KITCHEN OCCUPANCY	TOTAL OCCUPANCY	EXITS REQUIRED	MIN. DOOR WIDTH REQ. (0.2)	MIN. STAIR WIDTH REQ. (0.3)
12-200	RESTAURANT	3,797 SF	2,532 SF	1,266 SF	15	200	ASSEMBLY/ KITCHEN	169	7	176	2	35.2	52.8
12-205	ROOF ACCESS	78 SF			300	0	EQUIPMENT			1	1	0.2	0.3
12-210	OUTDOOR DINING	2,316 SF	1,544 SF	772 SF	15	0	ASSEMBLY	103	4	107	2	21.4	32.1
12-215	ELEVATOR	97 SF			0	0	ACCESSORY						
TOTAL		6,288 SF								284		56.8	85.2

LEGEND

- EGRESS PATH OF TRAVEL
- NEW PARTITION
- NEW 1-HOUR FIRE BARRIER
- EXIT SIGN
- PROPERTY LINE
- HATCH SHOWS BOUNDARY OF OUTDOOR DINNING
- HATCH SHOWS BOUNDARY OF CIRCULATION

NOTE: FUTURE TENANT SPACES ARE DESIGNED FOR SHELL ONLY, NOT FOR OCCUPANCY

SMS ARCHITECTS
100 Progress | Suite 250
Irvine, California 92618
949.757.3240 | www.sms-arch.com

CONSTANT

DANA POINT HARBOR PARTNERS

PROJECT NAME
DANA POINT HARBOR COMMERCIAL CORE
BUILDING 12
1290 HARBOR WAY
DANA POINT, CA 92629

CLIENT
BWP PROPERTIES
BURNHAM | WARD

LICENSED ARCHITECT
BRANDON DEDMON
No. C-37432
11.30.23
Exp. Date
STATE OF CALIFORNIA

No.	DATE	ISSUE
	9/30/2022	50% SCHEMATIC DESIGN
	10/28/2022	100% SCHEMATIC DESIGN
	02/10/2023	100% DESIGN DEVELOPMENT
	03/17/2023	50% CONSTRUCTION DOCUMENTS
A	04/21/2023	COUNTY RESUBMITTAL
B	10/09/2024	CITY PLANNING RESUBMITTAL

DRAWINGS AND WRITTEN MATERIAL APPEARING HEREIN CONSTITUTE ORIGINAL AND UNPUBLISHED WORK OF SMS ARCHITECTS AND MAY NOT BE DUPLICATED, USED OR DISCLOSED WITHOUT WRITTEN CONSENT OF THE ARCHITECT

PROJECT NO 22039
DATE JANUARY 25, 2023
DRAWING TITLE
EXITING PLAN AND CODE ANALYSIS

DRAWING NO
A0.2.1

G:\Users\Brandt\Documents\22039_DPH_Building 12-Arch_brandt@sms-arch.com.rvt

10/8/2024 5:08:31 PM

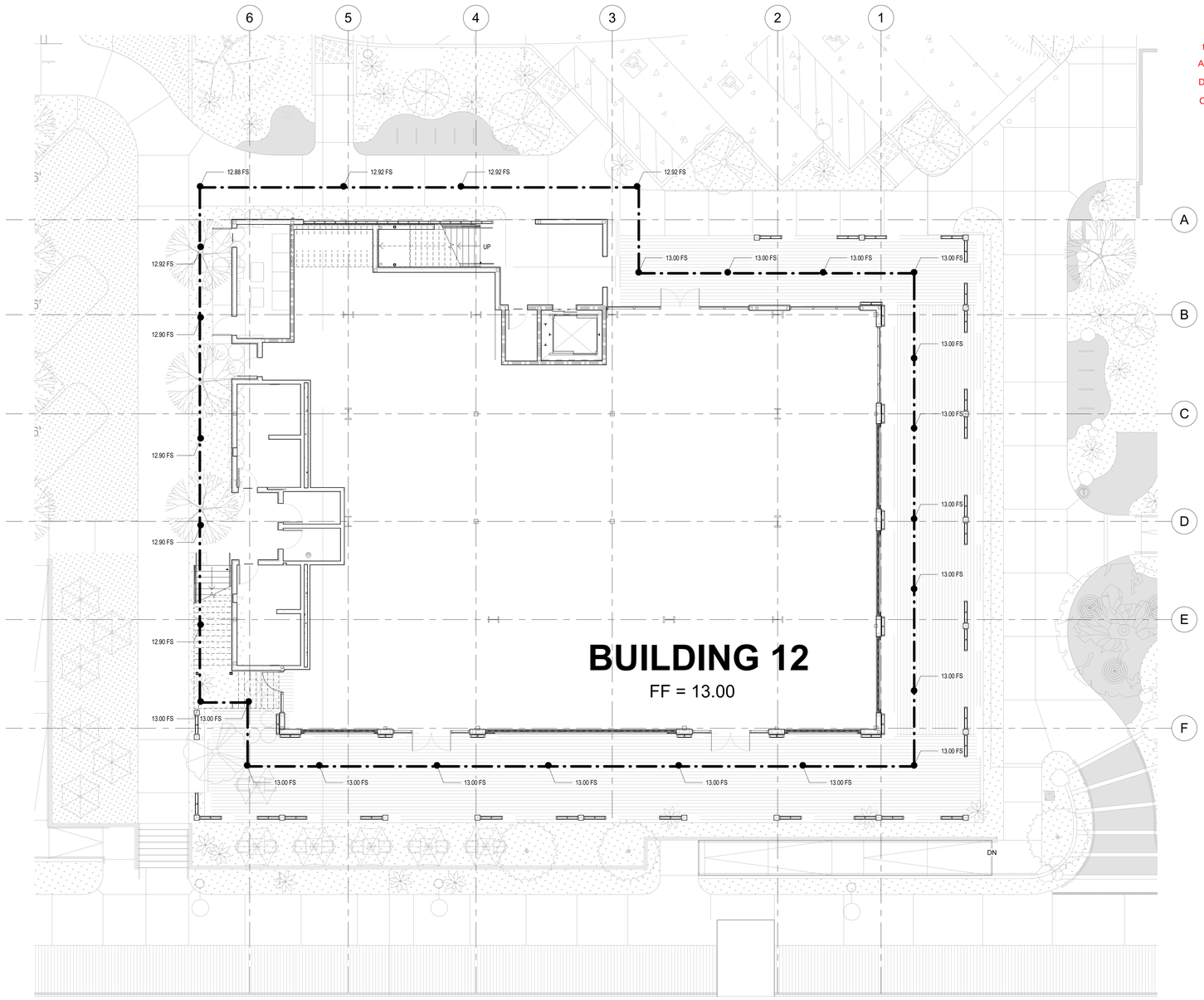

CITY OF DANA POINT
PLANNING DIVISION

This plan has been reviewed for ZONING ONLY and meets the requirements of Title 9 of the Dana Point Municipal Code.

APPROVED KBN

DATE 10/21/24

COMMENTS BUILDING 12 (OC PERMIT PKG21-0516) PER CDP13-0018(1).

Zoning: CanningK 11/13/2024

Building&Safety: OCPWAzarvandB 12/22/2025

Permits: BNR21-0246, ELE21-0853, MEC21-0514, PLB21-0900

County of Orange - OC Public Works
OC Development Services
APPROVED

This set of plans and specifications must be kept on the job at all times. It is unlawful to make any changes or alterations to these plans without written permission from OC Public Works, OC Development Services of Orange County. The stamping of these plan specifications SHALL NOT be held to permit or be an approval of the violation of any provisions of any County Ordinance or State law.

Hadi Tabatabaee
BUILDING OFFICIAL

AVERAGE FINISH GRADE 3
1/8" = 1'-0" A3.1.1 A0.3.0

AVERAGE FINISHED GRADE CALCULATION

NORTH: 12.95'
EAST: 13.00'
SOUTH: 13.00'
WEST: 12.93'

TOTAL: 51.88 / 4 = 12.97'

AVERAGE FINISHED GRADE = 12.97'

SMS ARCHITECTS
100 Progress | Suite 250
Irvine, California 92618
949.757.3240 | www.sms-arch.com

CONSTANT

DANA POINT HARBOR PARTNERS

PROJECT NAME
DANA POINT HARBOR COMMERCIAL CORE
BUILDING 12
1290 HARBOR WAY
DANA POINT, CA 92629

CLIENT
BWP BURNHAM | WARD PROPERTIES

No.	DATE	ISSUE
B	10/09/2024	CITY PLANNING RESUBMITTAL

DRAWINGS AND WRITTEN MATERIAL APPEARING HEREIN CONSTITUTE ORIGINAL AND UNPUBLISHED WORK OF SMS ARCHITECTS AND MAY NOT BE DUPLICATED, USED OR DISCLOSED WITHOUT WRITTEN CONSENT OF THE ARCHITECT

PROJECT NO. 22039

DATE JANUARY 25, 2023

DRAWING TITLE
AVERAGE FINISHED GRADE CALCULATION

DRAWING NO.
A0.3.0

C:\Users\Brandi\Documents\22039_DPH_Building 12-Arch_brandi@sms-arch.com.rvt

10/8/2024 5:08:40 PM

CITY OF DANA POINT
PLANNING DIVISION
This plan has been reviewed for ZONING ONLY and meets the requirements of Title 9 of the Dana Point Municipal Code.

APPROVED KBN

DATE 10/21/24

COMMENTS BUILDING 12 (OC PERMIT PKG21-0516) PER CDP13-0018(I).

Zoning: CanningK 11/13/2024

Building&Safety: OCPWAzarvandB 12/22/2025

Permits: BNR21-0246, ELE21-0853, MEC21-0514, PLB21-0900

County of Orange - OC Public Works
OC Development Services
APPROVED
This set of plans and specifications must be kept on the job at all times. It is unlawful to make any changes or alterations to these plans without written permission from OC Public Works, OC Development Services of Orange County. The stamping of these plan specifications SHALL NOT be held to permit or be an approval of the violation of any provisions of any County Ordinance or State law.
Hadi Tabatabaee
BUILDING OFFICIAL

AIA California

2019 CALIFORNIA GREEN BUILDING STANDARDS CODE

NONRESIDENTIAL MANDATORY MEASURES, SHEET 1 (January 2020, Includes August 2019 Supplement)

Y = YES
N/A = NOT APPLICABLE
RESPON. PARTY = RESPONSIBLE PARTY (ie: ARCHITECT, ENGINEER, OWNER, CONTRACTOR, INSPECTOR ETC.)

Y | N/A | RESPON. PARTY

CHAPTER 3
GREEN BUILDING
SECTION 301 GENERAL

301.1 SCOPE. Buildings shall be designed to include the green building measures specified as mandatory in the application checklists contained in this code. Voluntary green building measures are also included in the application checklists and may be included in the design and construction of structures covered by this code, but are not required unless adopted by a city, county, or city and county as specified in Section 101.7.

301.3 NONRESIDENTIAL ADDITIONS AND ALTERATIONS. [BSC-CG] The provisions of individual sections of Chapter 5 apply to newly constructed buildings, building additions of 1,000 square feet or greater, and/or building alterations with a permit valuation of $200,000 or above (for occupancies within the authority of California Building Standards Commission). Code sections relevant to additions and alterations shall only apply to the portions of the building being added or altered within the scope of the permitted work.

A code section will be designated by a banner to indicate where the code section only applies to newly constructed buildings [N] or to additions and/or alterations [A]. When the code section applies to both, no banner will be used.

301.3.1 Nonresidential additions and alterations that cause updates to plumbing fixtures only:

Note: On and after January 1, 2014, certain commercial real property, as defined in Civil Code Section 1101.3, shall have its noncompliant plumbing fixtures replaced with appropriate water-conserving plumbing fixtures under specific circumstances. See Civil Code Section 1101.1 *et seq.* for definitions, types of commercial real property affected, effective dates, circumstances necessitating replacement of noncompliant plumbing fixtures, and duties and responsibilities for ensuring compliance.

301.3.2 Waste Diversion. The requirements of Section 5.408 shall be required for additions and alterations whenever a permit is required for work.

301.4 PUBLIC SCHOOLS AND COMMUNITY COLLEGES. (see GBSC)
301.5 HEALTH FACILITIES. (see GBSC)

SECTION 302 MIXED OCCUPANCY BUILDINGS

302.1 MIXED OCCUPANCY BUILDINGS. In mixed occupancy buildings, each portion of a building shall comply with the specific green building measures applicable to each specific occupancy.

SECTION 303 PHASED PROJECTS

303.1 PHASED PROJECTS. For shell buildings and others constructed for future tenant improvements, only those code measures relevant to the building components and systems considered to be new construction (or newly constructed) shall apply.

303.1.1 Initial Tenant Improvements. The provisions of this code shall apply only to the initial tenant improvements to a project. Subsequent tenant improvements shall comply with the scoping provisions in Section 301.3 non-residential additions and alterations.

ABBREVIATION DEFINITIONS:

HCD	Department of Housing and Community Development
BSC	California Building Standards Commission
DSA-SS	Division of the State Architect, Structural Safety
OSHPD	Office of Statewide Health Planning and Development
LR	Low Rise
HR	High Rise
AA	Additions and Alterations
N	New

CHAPTER 5
NONRESIDENTIAL MANDATORY MEASURES

DIVISION 5.1 PLANNING AND DESIGN

SECTION 5.101 GENERAL
5.101.1 SCOPE
The provisions of this chapter outline planning, design and development methods that include environmentally responsible site selection, building design, building siting and development to protect, restore and enhance the environmental quality of the site and respect the integrity of adjacent properties.

SECTION 5.102 DEFINITIONS
5.102.1 DEFINITIONS
The following terms are defined in Chapter 2 *(and are included here for reference)*

CUTOFF LUMINAIRES. Luminaires whose light distribution is such that the candela per 1000 lamp lumens does not numerically exceed 25 (2.5 percent) at an angle of 90 degrees above nadir, and 100 (10 percent) at a vertical angle of 80 degrees above nadir. This applies to all lateral angles around the luminaire.

LOW-EMITTING AND FUEL EFFICIENT VEHICLES.
Eligible vehicles are limited to the following:

1. Zero emission vehicle (ZEV), including neighborhood electric vehicles (NEV), partial zero emission vehicle (PZEV), advanced technology PZEV (AT ZEV) or CNG fueled (original equipment manufacturer only) regulated under Health and Safety Code section 43800 and CCR, Title 13, Sections 1961 and 1962.
2. High-efficiency vehicles, regulated by U.S. EPA, bearing High-Occupancy Vehicle (HOV) car pool lane stickers issued by the Department of Motor Vehicles.

NEIGHBORHOOD ELECTRIC VEHICLE (NEV). A motor vehicle that meets the definition of "low-speed vehicle" either in Section 385.5 of the Vehicle Code or in 49CFR571.500 (as it existed on July 1, 2000), and is certified to zero-emission vehicle standards.

TENANT-OCCUPANTS. Building occupants who inhabit a building during its normal hours of operation as permanent occupants, such as employees, as distinguished from customers and other transient visitors.

VANPOOL VEHICLE. Eligible vehicles are limited to any motor vehicle, other than a motortruck or truck tractor, designed for carrying more than 10 but not more than 15 persons including the driver, which is maintained and used primarily for the nonprofit work-related transportation of adults for the purpose of ridesharing.

Note: Source: Vehicle Code, Division 1, Section 668

ZEV. Any vehicle certified to zero-emission standards.

SECTION 5.106 SITE DEVELOPMENT

Y ■ | N/A ☐

5.106.1 STORM WATER POLLUTION PREVENTION FOR PROJECTS THAT DISTURB LESS THAN ONE ACRE OF LAND. Newly constructed projects and additions which disturb less than one acre of land, and are not part of a larger common plan of development or sale, shall prevent the pollution of storm water runoff from the construction activities through one or more of the following measures:

5.106.1.1 Local ordinance. Comply with a lawfully enacted storm water management and/or erosion control ordinance.

5.106.1.2 Best Management Practices (BMPs). Prevent the loss of soil through wind or water erosion by implementing an effective combination of erosion and sediment control and good housekeeping BMPs.

1. Soil loss BMPs that should be considered for implementation as appropriate for each project include, but are not limited to, the following:
   a. Scheduling construction activity during dry weather, when possible.
   b. Preservation of natural features, vegetation, soil, and buffers around surface waters.
   c. Drainage swales or lined ditches to control stormwater flow.
   d. Mulching or hydroseeding to stabilize disturbed soils.
   e. Erosion control to protect slopes.
   f. Protection of storm drain inlets (gravel bags or catch basin inserts).
   g. Perimeter sediment control (perimeter silt fence, fiber rolls).
   h. Sediment trap or sediment basin to retain sediment on site.
   i. Stabilized construction exits.
   j. Wind erosion control.
   k. Other soil loss BMPs acceptable to the enforcing agency.
2. Good housekeeping BMPs to manage construction equipment, materials, non-stormwater discharges and wastes that should be considered for implementation as appropriate for each project include, but are not limited to, the following:
   a. Dewatering activities.
   b. Material handling and waste management.
   c. Building materials stockpile management.
   d. Management of washout areas (concrete, paints, stucco, etc.).
   e. Control of vehicle/equipment fueling to contractor's staging area.
   f. Vehicle and equipment cleaning performed off site.
   g Spill prevention and control.
   h. Other housekeeping BMPs acceptable to the enforcing agency.

Y ■ | N/A ☐ | CIVIL

5.106.2 STORMWATER POLLUTION PREVENTION FOR PROJECTS THAT DISTURB ONE OR MORE ACRES OF LAND. Comply with all lawfully enacted stormwater discharge regulations for projects that (1) disturb one acre or more of land, or (2) disturb less than one acre of land but are part of a larger common plan of development sale.

Note: Projects that (1) disturb one acre or more of land, or (2) disturb less than one acre of land but are part of the larger common plan of development or sale must comply with the post-construction requirements detailed in the applicable National Pollutant Discharge Elimination System (NPDES) General permit for Stormwater Discharges Associated with Construction and Land Disturbance Activities issued by the State Water Resources Control Board or the Lahontan Regional Water Quality Control Board (for projects in the Lake Tahoe Hydrologic Unit).

The NPDES permits require postconstruction runoff (post-project hydrology) to match the preconstruction runoff (pre-project hydrology) with the installation of postconstruction stormwater management measures. The NPDES permits emphasize runoff reduction through on-site stormwater use, interception, evapotranspiration, and infiltration through nonstructural controls, such as Low Impact Development (LID) practices, and conversation design measures. Stormwater volume that cannot be addressed using nonstructural practices is required to be captured in structural practices and be approved by the enforcing agency.

Refer to the current applicable permits on the State Water Resources Control Board website at: www.waterboards.ca.gov/constructionstormwater. Consideration to the stormwater runoff management measures should be given during the initial design process for appropriate integration into site development.

Y ■ | N/A ☐ | LANDSCAPE

5.106.4 BICYCLE PARKING. For buildings within the authority of California Building Standards Commission as specified in Section 103, comply with Section 5.106.4.1. For buildings within the authority of the Division of the State Architect pursuant to Section 105, comply with Section 5.106.4.2

5.106.4.1 Bicycle parking. [BSC-CG] Comply with Sections 5.106.4.1.1 and 5.106.4.1.2; or meet the applicable local ordinance, whichever is stricter.

5.106.4.1.1 Short-term bicycle parking. If the new project or an addition or alteration is anticipated to generate visitor traffic, provide permanently anchored bicycle racks within 200 feet of the visitors' entrance, readily visible to passers-by, for 5% of new visitor motorized vehicle parking spaces being added, with a minimum of one two-bike capacity rack.
Exception: Additions or alterations which add nine or less visitor vehicular parking spaces.

5.106.4.1.2 Long-term bicycle parking. For new buildings with tenant spaces that have 10 or more tenant-occupants, provide secure bicycle parking for 5 percent of the tenant-occupant vehicular parking spaces with a minimum of one bicycle parking facility.

5.106.4.1.3 For additions or alterations that add 10 or more tenant-occupant vehicular parking spaces, provide secure bicycle parking for 5 percent of the tenant vehicular parking spaces being added, with a minimum of one bicycle parking facility.

5.106.4.1.4 For new shell buildings in phased projects provide secure bicycle parking for 5 percent of the anticipated tenant-occupant vehicular parking spaces with a minimum of one bicycle parking facility.

5.106.4.1.5 Acceptable bicycle parking facility for Sections 5.106.4.1.2, 5.106.4.1.3, and 5.106.4.1.4 shall be convenient from the street and shall meet one of the following:

1. Covered, lockable enclosures with permanently anchored racks for bicycles;
2. Lockable bicycle rooms with permanently anchored racks; or
3. Lockable, permanently anchored bicycle lockers.

Note: Additional information on recommended bicycle accommodations may be obtained from Sacramento Area Bicycle Advocates.

5.106.4.2 Bicycle parking. [DSA-SS] For public schools and community colleges, comply with Sections 5.106.4.2.1 and 5.106.4.2.2

5.106.4.2.1 Student bicycle parking. Provide permanently anchored bicycle racks conveniently accessed with a minimum of four two-bike capacity racks per new building.
5.106.4.2.2 Staff bicycle parking. Provide permanent, secure bicycle parking conveniently accessed with a minimum of two staff bicycle parking spaces per new building. Acceptable bicycle parking facilities shall be convenient from the street or staff parking area and shall meet one of the following:

1. Covered, lockable enclosures with permanently anchored racks for bicycles;
2. Lockable bicycle rooms with permanently anchored racks; or
3. Lockable, permanently anchored bicycle lockers.

Y ■ | N/A ☐ | CIVIL

5.106.5.2 DESIGNATED PARKING FOR CLEAN AIR VEHICLES. In new projects or additions or alterations that add 10 or more vehicular parking spaces, provide designated parking for any combination of low-emitting, fuel-efficient and carpool/van pool vehicles as follows:

TABLE 5.106.5.2 - PARKING

TOTAL NUMBER OF PARKING SPACES	NUMBER OF REQUIRED SPACES
0-9	0
10-25	1
25-50	3
51-75	6
76-100	8
101-150	11
151-200	16
201 AND OVER	AT LEAST 8% OF TOTAL

5.106.5.2.1 - Parking stall marking. Paint, in the paint used for stall striping, the following characters such that the lower edge of the last word aligns with the end of the stall striping and is visible beneath a parked vehicle: CLEAN AIR / VAN POOL / EV

Note: Vehicles bearing Clean Air Vehicle stickers from expired HOV lane programs may be considered eligible for designated parking spaces.

Y ■ | N/A ☐ | CIVIL

5.106.5.3 Electric vehicle (EV) charging. [N] Construction shall comply with Section 5.106.5.3.1 or Section 5.106.5.3.2 to facilitate future installation of electric vehicle supply equipment (EVSE). When EVSE(s) is/are installed, it shall be in accordance with the *California Building Code,* the *California Electrical Code* and as follows:

5.106.5.3.1 Single charging space requirements. [N] When only a single charging space is required per Table 5.106.5.3.3, a raceway is required to be installed at the time of construction and shall be installed in accordance with the *California Electrical Code.* Construction plans and specifications shall include, but are not limited to, the following:

1. The type and location of the EVSE.
2. A listed raceway capable of accommodating a 208/240 -volt dedicated branch circuit.
3. The raceway shall not be less than trade size 1".
4. The raceway shall originate at a service panel or a subpanel serving the area, and shall terminate in close proximity to the proposed location of the charging equipment and listed suitable cabinet, box, enclosure or equivalent.
5. The service panel or subpanel shall have sufficient capacity to accommodate a minimum 40-ampere dedicated branch circuit for the future installation of the EVSE.

5.106.5.3.2 Multiple charging space requirements. [N] When multiple charging spaces are required per Table 5.106.5.3.3 raceway(s) is/are required to be installed at the time of construction and shall be installed in accordance with the *California Electrical Code*. Construction plans and specifications shall include, but are not limited to, the following:

1. The type and location of the EVSE.
2. The raceway(s) shall originate at a service panel or a subpanel(s) serving the area, and shall terminate in close proximity to the proposed location of the charging equipment and into listed suitable cabinet(s), box(es), enclosure(s) or equivalent.
3. Plan design shall be based upon 40-ampere minimum branch circuits.
4. Electrical calculations shall substantiate the design of the electrical system, to include the rating of equipment and any on-site distribution transformers and have sufficient capacity to simultaneously charge all required EVs at its full rated amperage.
5. The service panel or subpanel(s) shall have sufficient capacity to accommodate the required number of dedicated branch circuit(s) for the future installation of the EVSE.

5.106.5.3.3 EV charging space calculations. [N] Table 5.106.5.3.3 shall be used to determine if single or multiple charging space requirements apply for the future installation of EVSE.

Exceptions: On a case-by-case basis where the local enforcing agency has determined EV charging and infrastructure is not feasible based upon one or more of the following conditions:

1. Where there is insufficient electrical supply.
2. Where there is evidence suitable to the local enforcing agency substantiating that additional local utility infrastructure design requirements, directly related to the implementation of Section 5.106.5.3, may adversely impact the construction cost of the project.

TABLE 5.106.5.3.3

TOTAL NUMBER OF PARKING SPACES	NUMBER OF REQUIRED SPACES
0-9	0
10-25	1
26-50	2
51-75	4
76-100	5
101-150	7
151-200	10
201 AND OVER	6% of total[1]

1. Calculation for spaces shall be rounded up to the nearest whole number.

5.106.5.3.4 [N] Identification. The service panel or subpanel(s) circuit directory shall identify the reserved overcurrent protective device space(s) for future EV charging as "EV CAPABLE". The raceway termination location shall be permanently and visibly marked as "EV CAPABLE".

5.106.5.3.5 [N] Future charging spaces qualify as designated parking as described in Section 5.106.5.2 Designated parking for clean air vehicles.

Y ■ | N/A ☐ | LIGHTING

5.106.8 LIGHT POLLUTION REDUCTION. [N].I Outdoor lighting systems shall be designed and installed to comply with the following:

1. The minimum requirements in the California Energy Code for Lighting Zones 0-4 as defined in Chapter 10, Section 10-114 of the California Administrative Code; and
2. Backlight (B) ratings as defined in IES TM-15-11 (shown in Table A-1 in Chapter 8);
3. Uplight and Glare ratings as defined in California Energy Code (shown in Tables 130.2-A and 130.2-B in Chapter 8) and
4. Allowable BUG ratings not exceeding those shown in Table 5.106.8, [N] or Comply with a local ordinance lawfully enacted pursuant to Section 101.7, whichever is more stringent.

Exceptions: [N]

1. Luminaires that qualify as exceptions in Section 140.7 of the California Energy Code.
2. Emergency lighting.
3. Building facade meeting the requirements in Table 140.7-B of the California Energy Code, Part 6.
4. Custom lighting features as allowed by the local enforcing agency, as permitted by Section 101.8 Alternate materials, designs and methods of construction.

Note: [N]
1. See also California Building Code, Chapter 12, Section 1205.6 for college campus lighting requirements for parking facilities and walkways.
2. Refer to Chapter 8 (Compliance Forms, Worksheets and Reference Material) for IES TM-15-11 Table A-1, California Energy Code Tables 130.2-A and 130.2-B.
3. Refer to the California Building Code for requirements for additions and alterations.

TABLE 5.106.8 [N] MAXIMUM ALLOWABLE BACKLIGHT, UPLIGHT AND GLARE (BUG) RATINGS 1,2

ALLOWABLE RATING	LIGHTING ZONE LZ0	LIGHTING ZONE LZ1	LIGHTING ZONE LZ2	LIGHTING ZONE LZ3	LIGHTING ZONE LZ4
MAXIMUM ALLOWABLE BACKLIGHT RATING 3					
Luminaire greater than 2 mounting heights (MH) from property line	N/A	No Limit	No Limit	No Limit	No Limit
Luminaire back hemisphere is 1-2 MH from property line	N/A	B2	B3	B4	B4
Luminaire back hemisphere is 0.5-1 MH from property line	N/A	B1	B2	B3	B3
Luminaire back hemisphere is less than 0.5 MH from property line	N/A	B0	B0	B1	B2
MAXIMUM ALLOWABLE UPLIGHT RATING (U)					
For area lighting 4	N/A	U0	U0	U0	U0
For all other outdoor lighting,including decorative luminaires	N/A	U1	U2	U3	UR
MAXIMUM ALLOWABLE GLARE RATING 5 (G)					
Luminaire greater than 2 MH from property line	N/A	G1	G2	G3	G4
Luminaire front hemisphere is 1-2 MH from property line	N/A	G0	G1	G1	G2
Luminaire front hemisphere is 0.5-1 MH from property line	N/A	G0	G0	G1	G1
Luminaire back hemisphere is less than 0.5 MH from property line	N/A	G0	G0	G0	G1

1. IESNA Lighting Zones 0 and 5 are not applicable; refer to Lighting Zones as defined in the *California Energy Code* and Chapter 10 of the *California Administrative Code.*

2. For property lines that abut public walkways, bikeways, plazas and parking lots, the property line may be considered to be 5 feet beyond the actual property line for purpose of determining compliance with this section. For property lines that abut public roadways and public transit corridors, the property line may be considered to be the centerline of the public roadway or public transit corridor for the purpose of determining compliance with this section.

3. If the nearest property line is less than or equal to two mounting heights from the back hemisphere of the luminaire distribution, the applicable reduced Backlight rating shall be met.

4. General lighting luminaires in areas such as outdoor parking, sales or storage lots shall meet these reduced ratings. Decorative luminaires located in these areas shall meet *U*-value limits for "all other outdoor lighting".

5. If the nearest property line is less than or equal to two mounting heights from the front hemisphere of the luminaire distribution, the applicable reduced Glare rating shall be met.

Y ■ | N/A ☐ | CIVIL

5.106.10 GRADING AND PAVING. Construction plans shall indicate how site grading or a drainage system will manage all surface water flows to keep water from entering buildings. Examples of methods to manage surface water include, but are not limited to, the following:

1. Swales.
2. Water collection and disposal systems.
3. French drains.
4. Water retention gardens.
5. Other water measures which keep surface water away from buildings and aid in groundwater recharge.

Exception: Additions and alterations not altering the drainage path.

Y ■ | N/A ☐ | LANDSCAPE

5.106.12 SHADE TREES [DSA-SS]. Shade Trees shall be planted to comply with Sections 5.106.12.1, 5.106.12.2, and 5.106.12.3. Percentages shown shall be measured at noon on the summer solstice. Landscape irrigation necessary to establish and maintain tree health shall comply with Section 5.304.6.

5.106.12.1 Surface parking areas. Shade tree plantings, minimum #10 container size or equal, shall be installed to provide shade over 50 percent of the parking area within 15 years.

Exceptions: The surface parking area covered by solar photovoltaic shade structures, or shade structures, with roofing materials that comply with Table A5.106.11.2.2 in Appendix A5, are not included in the total area calculations.

5.106.12.2 Landscape areas. Shade tress plantings, minimum #10 container size or equal shall be installed to provide shade of 20% of the landscape area within 15 years.

Exceptions: Playfields for organized sport activity are not included in the total area calculation.

5.106.12.3. Hardscape areas. Shade tree plantings, minimum #10 container size or equal shall be installed to provide shade over 20 percent of the hardscape area within 15 years.

Exceptions: Walks, hardscape areas covered by solar photovoltaic shade structures, and hardscape areas covered by shade structures with roofing materials that comply with Table A5.106.11.2.2 in Appendix A5, are not included in the total area calculation.

DIVISION 5.2 ENERGY EFFICIENCY

SECTION 5.201 GENERAL
5.201.1 Scope [BSC-CG]. ***California Energy Code [DSA-SS]***. For the purposes of mandatory energy efficiency standards in this code, the California Energy Commission will continue to adopt mandatory building standards.

DIVISION 5.3 WATER EFFICIENCY AND CONSERVATION

SECTION 5.301 GENERAL
5.301.1 Scope. The provisions of this chapter shall establish the means of conserving water use indoors, outdoors and in wastewater conveyance.

SECTION 5.302 DEFINITIONS
5.302.1 Definitions. The following terms are defined in Chapter 2 *(and are included here for reference)*

EVAPOTRANSPIRATION ADJUSTMENT FACTOR (ETAF) [DSA-SS]. An adjustment factor when applied to reference evapotranspiration that adjusts for plant factors and irrigation efficiency, which ae two major influences on the amount of water that needs to be applied to the landscape.

FOOTPRINT AREA [DSA-SS]. The total area of the furthest exterior wall of the structure projected to natural grade, not including exterior areas such as stairs, covered walkways, patios and decks.

METERING FAUCET. A self-closing faucet that dispenses a specific volume of water for each actuation cycle. The volume or cycle duration can be fixed or adjustable.

GRAYWATER. Pursuant to Health and Safety Code Section 17922.12, "graywater" means untreated wastewater that has not been contaminated by any toilet discharge, has not been affected by infectious, contaminated, or unhealthy bodily wastes, and does not present a threat from contamination by unhealthful processing, manufacturing, or operating wastes. "Graywater" includes, but is not limited to wastewater from bathtubs, showers, bathroom washbasins, clothes washing machines and laundry tubs, but does not include waste water from kitchen sinks or dishwashers.

MODEL WATER EFFICIENT LANDSCAPE ORDINANCE (MWELO). The California ordinance regulating landscape design, installation and maintenance practices that will ensure commercial, multifamily and other developer installed landscapes greater than 2500 square feet meet an irrigation water budget developed based on landscaped area and climatological parameters.

MODEL WATER EFFICIENT LANDSCAPE ORDINANCE (MWELO). [HCD] The California model ordinance (California Code of Regulations, Title 23, Division 2, Chapter 2.7), regulating landscape design, installation and maintenance practices. Local agencies are required to adopt the updated MWELO, or adopt a local ordinance at least as effective as the MWELO.

POTABLE WATER. Water that is drinkable and meets the U.S. Environmental Protection Agency (EPA) Drinking Water Standards. See definition in the California Plumbing Code, Part 5.

POTABLE WATER. [HCD] Water that is satisfactory for drinking, culinary, and domestic puroses, and meets the U.S. Environmental Protection Agency (EPA) Drinking Water Standards and the requirements of the Health Authority Having Jurisdiction.

RECYCLED WATER. Water which, as a result of treatment of waste, is suitable for a direct beneficial use or a controlled use that would not otherwise occur [Water Code Section 13050 (n)]. Simply put, recycled water is water treated to remove waste matter attaining a quality that is suitable to use the water again.

SUBMETER. A meter installed subordinate to a site meter. Usually used to measure water intended for one purpose, such as landscape irrigation. For the purposes of CALGreen, a dedicated meter may be considered a submeter.

WATER BUDGET. Is the estimated total landscape irrigation water use which shall not exceed the maximum applied water allowance calculated in accordance with the Department of Water Resources Model Efficient Landscape Ordinance (MWELO).

SECTION 5.303 INDOOR WATER USE

Y ■ | N/A ☐

5.303.1 METERS. Separate submeters or metering devices shall be installed for the uses described in Sections 503.1.1 and 503.1.2.

5.303.1.1 Buildings in excess of 50,000 square feet. Separate submeters shall be installed as follows:

1. For each individual leased, rented or other tenant space within the building projected to consume more than 100 gal/day (380 L/day), including, but not limited to, spaces used for laundry or cleaners, restaurant or food service, medical or dental office, laboratory, or beauty salon or barber shop.
2. Where separate submeters for individual building tenants are unfeasible, for water supplied to the following subsystems:
   a. Makeup water for cooling towers where flow through is greater than 500 gpm (30 L/s).
   b. Makeup water for evaporative coolers greater than 6 gpm (0.04 L/s).
   c. Steam and hot water boilers with energy input more than 500,000 Btu/h (147 kW).

5.303.1.2 Excess consumption. A separate submeter or metering device shall be provided for any tenant within a new building or within an addition that is projected to consume more than 1,000 gal/day.

Y ☐ | N/A ■

5.303.3 WATER CONSERVING PLUMBING FIXTURES AND FITTINGS. Plumbing fixtures (water closets and urinals) and fittings (faucets and showerheads) shall comply with the following:

5.303.3.1 Water Closets. The effective flush volume of all water closets shall not exceed 1.28 gallons per flush. Tank-type water closets shall be certified to the performance criteria of the U.S. EPA WaterSense Specification for Tank-Type toilets.

Note: The effective flush volume of dual flush toilets is defined as the composite, average flush volume of two reduced flushes and one full flush.

5.303.3.2 Urinals.
5.303.3.2.1 Wall-mounted Urinals. The effective flush volume of wall-mounted urinals shall not exceed 0.125 gallons per flush.

5.303.3.2.2 Floor-mounted Urinals. The effective flush volume of floor-mounted or other urinals shall not exceed 0.5 gallons per flush.

5.303.3.3 Showerheads. [BSC-CG]
5.303.3.3.1 Single showerhead. Showerheads shall have a maximum flow rate of not more than 1.8 gallons per minute at 80 psi. Showerheads shall be certified to the performance criteria of the U.S. EPA WaterSense Specification for Showerheads.

5.303.3.3.2 Multiple showerheads serving one shower. When a shower is served by more than one showerhead, the combined flow rate of all the showerheads and/or other shower outlets controlled by a single valve shall not exceed 1.8 gallons per minute at 80 psi, or the shower shall be designed to allow only one shower outlet to be in operation at a time.
Note: A hand-held shower shall be considered a showerhead.

DISCLAIMER: *THIS DOCUMENT IS PROVIDED AND INTENDED TO BE USED AS A MEANS TO INDICATE AREAS OF COMPLIANCE WITH THE 2016 CALIFORNIA GREEN BUILDING STANDARDS (CALGREEN) CODE. DUE TO THE VARIABLES BETWEEN BUILDING DEPARTMENT JURISDICTIONS, THIS CHECKLIST IS TO BE USED ON AN INDIVIDUAL PROJECT BASIS AND MAY BE MODIFIED BY THE END USER TO MEET THOSE INDIVIDUAL NEEDS. THE END USER ASSUMES ALL RESPONSIBILITY ASSOCIATED WITH THE USE OF THIS DOCUMENT, INCLUDING VERIFICATION WITH THE FULL CODE.*

C:\Users\Brandi\Documents\22039_DPH_Building 12-Arch_brandi@sms-arch.com.rvt

SMS ARCHITECTS
100 Progress | Suite 250
Irvine, California 92618
949.757.3240 | www.sms-arch.com

CONSTANT

DANA POINT HARBOR PARTNERS

PROJECT NAME:
DANA POINT HARBOR COMMERCIAL CORE
BUILDING 12
1290 HARBOR WAY
DANA POINT, CA 92629

CLIENT
B|W|P BURNHAM|WARD PROPERTIES

LICENSED ARCHITECT
BRANDON DEDMON
No. C-37432
11.30.23
Exp. Date
STATE OF CALIFORNIA

No.	DATE	ISSUE
	9/30/2022	50% SCHEMATIC DESIGN
	10/28/2022	100% SCHEMATIC DESIGN
	02/10/2023	100% DESIGN DEVELOPMENT
	03/17/2023	50% CONSTRUCTION DOCUMENTS
A	04/21/2023	COUNTY RESUBMITTAL
B	10/09/2024	CITY PLANNING RESUBMITTAL

DRAWINGS AND WRITTEN MATERIAL APPEARING HEREIN CONSTITUTE ORIGINAL AND UNPUBLISHED WORK OF SMS ARCHITECTS AND MAY NOT BE DUPLICATED, USED OR DISCLOSED WITHOUT WRITTEN CONSENT OF THE ARCHITECT

PROJECT NO. 22039
DATE JANUARY 25, 2023

DRAWING TITLE
CALIFORNIA GREEN CODE NOTES

DRAWING NO.
A0.4.1

10/8/2024 5:08:40 PM

CITY OF DANA POINT
PLANNING DIVISION
This plan has been reviewed for ZONING ONLY and meets the requirements of Title 9 of the Dana Point Municipal Code.
APPROVED KBN
DATE 10/21/24
COMMENTS BUILDING 12 (OC PERMIT PKG21-0516) PER CDP13-0018(I).

Zoning: CanningK 11/13/2024
Building&Safety: OCPWAzarvandB 12/22/2025
Permits: BNR21-0246, ELE21-0853, MEC21-0514, PLB21-0900

County of Orange - OC Public Works
OC Development Services
APPROVED
This set of plans and specifications must be kept on the job at all times. It is unlawful to make any changes or alterations to these plans without written permission from OC Public Works, OC Development Services of Orange County. The stamping of these plan specifications SHALL NOT be held to permit or be an approval of the violation of any provisions of any County Ordinance or State law.
Hadi Tabatabaee
BUILDING OFFICIAL

AIA California

2019 CALIFORNIA GREEN BUILDING STANDARDS CODE

NONRESIDENTIAL MANDATORY MEASURES, SHEET 1 (January 2020, Includes August 2019 Supplement)

Y = YES
N/A = NOT APPLICABLE
RESPON. PARTY = RESPONSIBLE PARTY (ie: ARCHITECT, ENGINEER, OWNER, CONTRACTOR, INSPECTOR ETC.)

(Columns: Y | N/A | RESPON. PARTY)

5.303.3.4 Faucets and fountains.

5.303.3.4.1 Nonresidential Lavatory faucets. Lavatory faucets shall have a maximum flow rate of not more than 0.5 gallons per minute at 60 psi.

5.303.3.4.2 Kitchen faucets. Kitchen faucets shall have a maximum flow rate of not more than 1.8 gallons per minute at 60 psi. Kitchen faucets may temporarily increase the flow above the maximum rate, but not to exceed 2.2 gallons per minute at 60 psi, and must default to a maximum flow rate of 1.8 gallons per minute at 60 psi.

5.303.3.4.3 Wash fountains. Wash fountains shall have a maximum flow rate of not more than1.8 gallons per minute/20 [rim space (inches) at 60 psi].

5.303.3.4.4 Metering faucets. Metering faucets shall not deliver more than 0.20 gallons per cycle.

5.303.3.4.5 Metering faucets for wash fountains. Metering faucets for wash fountains shall have a maximum flow rate of not more than 0.20 gallons per minute/20 [rim space (inches) at 60 psi].

Note: Where complying faucets are unavailable, aerators or other means may be used to achieve reduction.

[Y ☐ | N/A ■] **5.303.4 COMMERCIAL KITCHEN EQUIPMENT.**

5.303.4.1 Food Waste Disposers. Disposers shall either modulate the use of water to no more than 1 gpm when the disposer is not in use (not actively grinding food waste/no-load) or shall automatically shut off after no more than 10 minutes of inactivity. Disposers shall use no more than 8 gpm of water.
Note: This code section does not affect local jurisdiction authority to prohibit or require disposer installation.

[Y ☐ | N/A ■] **5.303.5 AREAS OF ADDITION OR ALTERATION.** For those occupancies within the authority of the California Building Standards Commission as specified in Section 103, the provisions of Section 5.303.3 and 5.303.4 shall apply to new fixtures in additions or areas of alteration to the building.

[Y ☐ | N/A ■] **5.303.6 STANDARDS FOR PLUMBING FIXTURES AND FITTINGS.** Plumbing fixtures and fittings shall be installed in accordance with the *California Plumbing Code*, and shall meet the applicable standards referenced in Table 1701.1 of the *California Plumbing Code* and in Chapter 6 of this code.

SECTION 5.304 OUTDOOR WATER USE

[Y ■ | N/A ☐ | LDSCP/ARCH] **5.304.1 OUTDOOR POTABLE WATER USE IN LANDSCAPE AREAS.** Nonresidential developments shall comply with a local water efficient landscape ordinance or the current California Department of Water Resources' Model Water Efficient Landscape Ordinance (MWELO), whichever is more stringent.

Notes:
1. The Model Water Efficient Landscape Ordinance (MWELO) is located in the California Code of Regulations, Title 23, Chapter 2.7, Division 2.
2. MWELO and supporting documents, including a water budget calculator, are available at: https://www.water.ca.gov/.

[Y ■ | N/A ☐ | LDSCP/ARCH] **5.304.6 OUTDOOR POTABLE WATER USE IN LANDSCAPE AREAS.** For public schools and community colleges, landscape projects as described in Sections 5.304.6.1 and 5.304.6.2 shall comply with the California Department of Water Resources Model Water Efficient Landscape Ordinance (MWELO) commencing with Section 490 of Chapter 2.7, Division 2, Title 23, California Code of Regulations, except that the evapotranspiration adjustment factor (ETAF) shall be 0.65 with an additional water allowance for special landscape areas (SLA) of 0.35.

Exception: Any project with an aggregate landscape area of 2,500 square feet or less may comply with the prescriptive measures contained in Appendix D of the MWELO.

5.304.6.1 Newly constructed landscapes. New construction projects with an aggregate landscape area equal to or greater than 500 square feet.

5.304.6.2 Rehabilitated landscapes. Rehabilitated landscape projects with an aggregate landscape area equal to or greater than 1,200 square feet.

DIVISION 5.4 MATERIAL CONSERVATION AND RESOURCE EFFICIENCY

SECTION 5.401 GENERAL
5.401.1 SCOPE. The provisions of this chapter shall outline means of achieving material conservation and resource efficiency through protection of buildings from exterior moisture, construction waste diversion, employment of techniques to reduce pollution through recycling of materials, and building commissioning or testing and adjusting.

SECTION 5.402 DEFINITIONS
5.402.1 DEFINITIONS. The following terms are defined in Chapter 2 *(and are included here for reference)*

ADJUST. To regulate fluid flow rate and air patterns at the terminal equipment, such as to reduce fan speed or adjust a damper.

BALANCE. To proportion flows within the distribution system, including sub-mains, branches and terminals, according to design quantities.

BUILDING COMMISSIONING. A systematic quality assurance process that spans the entire design and construction process, including verifying and documenting that building systems and components are planned, designed, installed, tested, operated and maintained to meet the owner's project requirements.

ORGANIC WASTE. Food waste, green waste, landscape and pruning wste, nonhazardous wood waste, and food soiled paper waste that is mixed in with food waste.

TEST. A procedure to determine quantitative performance of a system or equipment

SECTION 5.407 WATER RESISTANCE AND MOISTURE MANAGEMENT
5.407.1 WEATHER PROTECTION. Provide a weather-resistant exterior wall and foundation envelope as required by California Building Code Section 1402.2 (Weather Protection), manufacturer's installation instructions or local ordinance, whichever is more stringent.

[Y ■ | N/A ☐ | LDSCP/ARCH] **5.407.2 MOISTURE CONTROL.** Employ moisture control measures by the following methods.

5.407.2.1 Sprinklers. Design and maintain landscape irrigation systems to prevent spray on structures.

5.407.2.2 Entries and openings. Design exterior entries and/or openings subject to foot traffic or wind-driven rain to prevent water intrusion into buildings as follows:

5.407.2.2.1 Exterior door protection. Primary exterior entries shall be covered to prevent water intrusion by using nonabsorbent floor and wall finishes within at least 2 feet around and perpendicular to such openings plus at least one of the following:

1. An installed awning at least 4 feet in depth.
2. The door is protected by a roof overhang at least 4 feet in depth.
3. The door is recessed at least 4 feet.
4. Other methods which provide equivalent protection.

5.407.2.2.2 Flashing. Install flashings integrated with a drainage plane.

SECTION 5.408 CONSTRUCTION WASTE REDUCTION, DISPOSAL AND RECYCLING
[Y ■ | N/A ☐ | CONSTRUCTION] **5.408.1 CONSTRUCTION WASTE MANAGEMENT.** Recycle and/or salvage for reuse a minimum of 65% of the non-hazardous construction and demolition waste in accordance with Section 5.408.1.1, 5.408.1.2 or 5.408.1.3; or meet a local construction and demolition waste management ordinance, whichever is more stringent.

5.408.1.1 Construction waste management plan. Where a local jurisdiction does not have a construction and demolition waste management ordinance, submit a construction waste management plan that:

1. Identifies the construction and demolition waste materials to be diverted from disposal by efficient usage, recycling, reuse on the project or salvage for future use or sale.
2. Determines if construction and demolition waste materials will be sorted on-site (source-separated) or bulk mixed (single stream).
3. Identifies diversion facilities where construction and demolition waste material collected will be taken.
4. Specifies that the amount of construction and demolition waste materials diverted shall be calculated byweight or volume, but not by both.

5.408.1.2 Waste Management Company. Utilize a waste management company that can provide verifiable documentation that the percentage of construction and demolition waste material diverted from the landfill complies with this section.

Note: The owner or contractor shall make the determination if the construction and demolition waste material will be diverted by a waste management company.

Exceptions to Sections 5.408.1.1 and 5.408.1.2:

1. Excavated soil and land-clearing debris.
2. Alternate waste reduction methods developed by working with local agencies if diversion or recycle facilities capable of compliance with this item do not exist.
3. Demolition waste meeting local ordinance or calculated in consideration of local recycling facilities and markets.

5.408.1.3 Waste stream reduction alternative. The combined weight of new construction disposal that does not exceed two pounds per square foot of building area may be deemed to meet the 65% minimum requirement as approved by the enforcing agency.

5.408.1.4 Documentation. Documentation shall be provided to the enforcing agency which demonstrates compliance with Sections 5.408.1.1, through 5.408.1.3. The waste management plan shall be updated as necessary and shall be accessible during construction for examination by the enforcing agency.

Notes:

1. Sample forms found in "A Guide to the California Green Building Standards Code (Nonresidential)" located at www.bsc.ca.gov/Home/CALGreen.aspx may be used to assist in documenting compliance with the waste management plan.
2. Mixed construction and demolition debris processors can be located at the California Department of Resources Recycling and Recovery (CalRecycle).

[Y ■ | N/A ☐ | CONSTRUCTION] **5.408.2 UNIVERSAL WASTE. [A]** Additions and alterations to a building or tenant space that meet the scoping provisions in Section 301.3 for nonresidential additions and alterations, shall require verification that Universal Waste items such as fluorescent lamps and ballast and mercury containing thermostats as well as other California prohibited Universal Waste materials are disposed of properly and are diverted from landfills. A list of prohibited Universal Waste materials shall be included in the construction documents.

Note: Refer to the Universal Waste Rule link at:
http://www.dtsc.ca.gov/LawsRegsPolicies/Regs/upload/OEAR-A_REGS_UWR_FinalText.pdf

[Y ■ | N/A ☐ | CONSTRUCTION] **5.408.3 EXCAVATED SOIL AND LAND CLEARING DEBRIS.** 100 percent of trees, stumps, rocks and associated vegetation and soils resulting primarily from land clearing shall be reused or recycled. For a phased project, such material may be stockpiled on site until the storage site is developed.

Exception: Reuse, either on or off-site, of vegetation or soil contaminated by disease or pest infestation.

Notes:

1. If contamination by disease or pest infestation is suspected, contact the County Agricultural Commissioner and follow its direction for recycling or disposal of the material.
2. For a map of know pest and/or disease quarantine zones, consult with the California Department of Food and Agriculture. (www.cdfa.ca.gov)

SECTION 5.410 BUILDING MAINTENANCE AND OPERATIONS
[Y ■ | N/A ☐ | ARCH] **5.410.1 RECYCLING BY OCCUPANTS.** Provide readily accessible areas that serve the entire building and are identified for the depositing, storage and collection of non-hazardous materials for recycling, including (at a minimum) paper, corrugated cardboard, glass, plastics, organic waste, and metals or meet a lawfully enacted local recycling ordinance, if more restrictive.

Exception: Rural jurisdictions that meet and apply for the exemption in Public Resources Code 42649.82 (a)(2)(A) et seq. shall also be exempt from the organic waste portion of this section.

5.410.1.1 Additions. All additions conducted within a 12-month period under single or multiple permits, resulting in an increase of 30% or more in floor area, shall provide recycling areas on site.

Exception: Additions within a tenant space resulting in less than a 30% increase in the tenant space floor area.

5.410.1.2 Sample ordinance. Space allocation for recycling areas shall comply with Chapter 18, Part 3, Division 30 of the *Public Resources Code*. Chapter 18 is known as the California Solid Waste Reuse and Recycling Access Act of 1991 (Act).

Note: A sample ordinance for use by local agencies may be found in Appendix A of the document at the CalRecycle's web site.

[Y ☐ | N/A ☐] **5.410.2 COMMISSIONING. [N] New buildings 10,000 square feet and over.** For new buildings 10,000 square feet and over, building commissioning shall be included in the design and construction processes of the building project to verify that the building systems and components meet the owner's or owner representative's project requirements. Commissioning shall be performed in accordance with this section by trained personnel with experience on projects of comparable size and complexity. For I-occupancies that are not regulated by OSHPD or for I-occupancies and L-occupancies that are not regulated y the California Energy Code Section 100.0 Scope, all requirements in Sections 5.410.2 through 5.410.2.6 shall apply.

Note: For energy-related systems under the scope (Section 100) of the California Energy Code, including heating, ventilation, air conditioning (HVAC) systems and controls, indoor lighting systems and controls, as well as water heating systems and controls, refer to California Energy Code Section 120.8 for commissioning requirements

Commissioning requirements shall include:

1. Owner's or Owner representative's project requirements.
2. Basis of design.
3. Commissioning measures shown in the construction documents.
4. Commissioning plan.
5. Functional performance testing.
6. Documentation and training.
7. Commissioning report.

Exceptions:

1. Unconditioned warehouses of any size.
2. Areas less than 10,000 square feet used for offices or other conditioned accessory spaces within unconditioned warehouses.
3. Tenant improvements less than 10,000 square feet as described in Section 303.1.1.
4. Open parking garages of any size, or open parking garage areas, of any size, within a structure.

Note: For the purposes of this section, unconditioned shall mean a building, area, or room which does not provide heating and or air conditioning.

Informational Notes:

1. IAS AC 476 is an accreditation criteria for organizations providing training and/or certification of commissioning personnel. AC 476 is available to the Authority Having Jurisdiction as a reference for qualifications of commissioning personnel. AC 476 des not certify individuals to conduct functional performance tests or to adjust and balance systems.

2. Functional performance testing for heating, ventilation, air conditioning systems and lighting controls must be performed in compliance with the *California Energy Code.*

5.410.2.1 Owner's or Owner Representative's Project Requirements (OPR). [N] The expectations and requirements of the building appropriate to its phase shall be documented before the design phase of the project begins. This documentation shall include the following:
1. Environmental and sustainability goals.
2. Building sustainable goals.
3. Indoor environmental quality requirements.
4. Project program, including facility functions and hours of operation, and need for after hours operation.
5. Equipment and systems expectations.
6. Building occupant and operation and maintenance (O&M) personnel expectations.

5.410.2.2 Basis of Design (BOD). [N] A written explanation of how the design of the building systems meets the OPR shall be completed at the design phase of the building project. The Basis of Design document shall cover the following systems:

1. Renewable energy systems.
2. Landscape irrigation systems.
3. Water reuse system.

5.410.2.3 Commissioning plan. [N] Prior to permit issuance a commissioning plan shall be completed to document how the project will be commissioned. The commissioning plan shall include the following:
1. General project information.
2. Commissioning goals.
3. Systems to be commissioned. Plans to test systems and components shall include:
   a. An explanation of the original design intent.
   b. Equipment and systems to be tested, including the extent of tests.
   c. Functions to be tested.
   d. Conditions under which the test shall be performed.
   e. Measurable criteria for acceptable performance.
4. Commissioning team information.
5. Commissioning process activities, schedules and responsibilities. Plans for the completion of commissioning shall be included.

5.410.2.4 Functional performance testing. [N] Functional performance tests shall demonstrate the correct installation and operation of each component, system and system-to-system interface in accordance with the approved plans and specifications. Functional performance testing reports shall contain information addressing each of the building components tested, the testing methods utilized, and include any readings and adjustments made.

5.410.2.5 Documentation and training. [N] A Systems Manual and Systems Operations Training are required, including Occupational Safety and Health Act (OSHA) requirements in *California Code of Regulations* (CCR), Title 8, Section 5142, and other related regulations.

5.410.2.5.1 Systems manual. [N] Documentation of the operational aspects of the building shall be completed within the systems manual and delivered to the building owner or representative. The systems manual shall include the following:
1. Site information, including facility description, history and current requirements.
2. Site contact information.
3. Basic operations and maintenance, including general site operating procedures, basic troubleshooting, recommended maintenance requirements, site events log.
4. Major systems.
5. Site equipment inventory and maintenance notes.
6. A copy of verifications required by the enforcing agency or this code.
7. Other resources and documentation, if applicable.

5.410.2.5.2 Systems operations training. [N] A program for training of the appropriate maintenance staff for each equipment type and/or system shall be developed and documented in the commissioning report and shall include the following:
1. System/equipment overview (what it is, what it does and with what other systems and/or equipment it interfaces).
2. Review and demonstration of servicing/preventive maintenance.
3. Review of the information in the Systems Manual.
4. Review of the record drawings on the system/equipment.

5.410.2.6 Commissioning report. [N] A report of commissioning process activities undertaken through the design and construction phases of the building project shall be completed and provided to the owner or representative.

[Y ■ | N/A ☐ | CONSTRUCTION] **5.410.4 TESTING AND ADJUSTING. New buildings less than 10,000 square feet.** Testing and adjusting of systems shall be required for new buildings less than 10,000 square feet or new systems to serve an addition or alteration subject to Section 303.1.

5.410.4.2 (Reserved)

Note: For energy-related systems under the scope (Section 100) of the California Energy Code, including heating, ventilation, air conditioning (HVAC) systems and controls, indoor lighting system and controls, as well as water heating systems and controls, refer to California Energy Code Section 120.8 for commissioning requirements and Sections 120.5, 120.6, 130.4, and 140.9(b)3 for additional testing requirements of specific systems.

5.410.4.2 Systems. Develop a written plan of procedures for testing and adjusting systems. Systems to be included for testing and adjusting shall include at a minimum, as applicable to the project:

1. Renewable energy systems.
2. Landscape irrigation systems.
3. Water reuse systems.

5.410.4.3 Procedures. Perform testing and adjusting procedures in accordance with manufacturer's specifications and applicable standards on each system.

5.410.4.3.1 HVAC balancing. In addition to testing and adjusting, before a new space-conditioning system serving a building or space is operated for normal use, the system shall be balanced in accordance with the procedures defined by the Testing Adjusting and Balancing Bureau National Standards; the National Environmental Balancing Bureau Procedural Standards; Associated Air Balance Council National Standards or as approved by the enforcing agency.

5.410.4.4 Reporting. After completion of testing, adjusting and balancing, provide a final report of testing signed by the individual responsible for performing these services.

5.410.4.5 Operation and maintenance (O & M) manual. Provide the building owner or representative with detailed operating and maintenance instructions and copies of guaranties/warranties for each system. O & M instructions shall be consistent with OSHA requirements in CCR, Title 8, Section 5142, and other related regulations.

5.410.4.5.1 Inspections and reports. Include a copy of all inspection verifications and reports required by the enforcing agency.

DIVISION 5.5 ENVIRONMENTAL QUALITY

SECTION 5.501 GENERAL
5.501.1 SCOPE. The provisions of this chapter shall outline means of reducing the quantity of air contaminants that are odorous, irritating, and/or harmful to the comfort and well-being of a building's installers, occupants and neighbors.

SECTION 5.502 DEFINITIONS
5.502.1 DEFINITIONS. The following terms are defined in Chapter 2 *(and are included here for reference)*

ARTERIAL HIGHWAY. A general term denoting a highway primarily for through traffic usually on a continuous route.

A-WEIGHTED SOUND LEVEL (dBA). The sound pressure level in decibels as measured on a sound level meter using the internationally standardized A-weighting filter or as computed from sound spectral data to which A-weighting adjustments have been made.

1 BTU/HOUR. British thermal units per hour, also referred to as Btu. The amount of heat required to raise one pound of water one degree Fahrenheit per hour, a common measure of heat transfer rate. A ton of refrigeration is 12,000 Btu, the amount of heat required to melt a ton (2,000 pounds) of ice at 32^0 Fahrenheit.

COMMUNITY NOISE EQUIVALENT LEVEL (CNEL). A metric similar to the day-night average sound level (Ldn), except that a 5 decibel adjustment is added to the equivalent continuous sound exposure level for evening hours (7pm to 10pm) in addition to the 10 dB nighttime adjustment used in the Ldn.

COMPOSITE WOOD PRODUCTS. Composite wood products include hardwood plywood, particleboard and medium density fiberboard. "Composite wood products" does not include hardboard, structural plywood, structural panels, structural composite lumber, oriented strand board, glued laminated timber, prefabricated wood I–joists or finger–jointed lumber, all as specified in California Code of Regulations (CCR), Title 17, Section 93120.1(a).

Note: See CCR, Title 17, Section 93120.1.

DAY-NIGHT AVERAGE SOUND LEVEL (Ldn). The A-weighted equivalent continuous sound exposure level for a 24-hour period with a 10 dB adjustment added to sound levels occurring during nighttime hours (10p.m. to 7 a.m.).

DECIBEL (db). A measure on a logarithmic scale of the magnitude of a particular quantity (such as sound pressure, sound power, sound intensity) with respect to a reference quantity.

ELECTRIC VEHICLE (EV). An automotive-type vehicle for on-road use, such as passenger automobiles, buses, trucks, vans, neighborhood electric vehicles, electric motorcycles, and the like, primarily powered by an electric motor that draws current from a rechargeable storage battery, fuel cell, photovoltaic array, or other source of electric current. Plug-in hybrid electric vehicles (PHEV) are considered electric vehicles. For purposes of the *California Electrical Code*, off-road, self-propoelled electric vehicles, such as industrial trucks, hoists, lifts, transports, golf carts, airline ground support equipment, tractors, boats, and the like, are not included.

ELECTRIC VEHICLE CHARGING STATION(S) (EVCSj). One or more spaces intended for charging electric vehicles.

ELECTRIC VEHICLE SUPPLY EQUIPMENT (EVSE). The conductors, including the ungrounded, grounded, and equipment grounding conductors and the electric vehicle connectors, attachment plugs, and all other fittings, devices, power outlets, or apparatus installed specifically for the purpose of transferring energy between the premises wiring and the electric vehicle.

ENERGY EQUIVALENT (NOISE) LEVEL (Leq). The level of a steady noise which would have the same energy as the fluctuating noise level integrated over the time of period of interest.

EXPRESSWAY. An arterial highway for through traffic which may have partial control of access, but which may or may not be divided or have grade separations at intersections.

FREEWAY. A divided arterial highway with full control of access and with grade separations at intersections.

GLOBAL WARMING POTENTIAL (GWP). The radiative forcing impact of one mass-based unit of a given greenhouse gas relative to an equivalent unit of carbon dioxide over a given period of time. Carbon dioxide is the reference compound with a GWP of one.

GLOBAL WARMING POTENTIAL VALUE (GWP VALUE). A 100-year GWP value published by the Intergovernmental Panel on Climate Change (IPCC) in either its Second Assessment Report (SAR) (IPCC, 1995); or its Fourth Assessment A-3 Report (AR4) (IPCC, 2007). The SAR GWP values are found in column "SAR (100-yr)" of Table 2.14.; the AR4 GWP values are found in column "100 yr" of Table 2.14.

HIGH-GWP REFRIGERANT. A compound used as a heat transfer fluid or gas that is: (a) a chlorofluorocarbon, a hdrochlorofluorocarbon, a hydrofluorocarbon, a perfluorocarbon, or any compound or blend of compounds, with a GWP value equal to or greater than 150, or (B) any ozone depleting substance as defined in Title 40 of the Code of Federal Regulations, Part 82, sec.82.3 (as amended March 10, 2009).

LONG RADIUS ELBOW. Pipe fitting installed between two lengths of pipe or tubing to allow a change of direction, with a radius 1.5 times the pipe diameter.

LOW-GWP REFRIGERANT. A compound used as a heat transfer fluid or gas that: (A) has a GWP value less than 150, and (B) is not an ozone depleting substance as defined in Title 40 of the Code of Federal Regulations, Part 82, sec.82.3 (as amended March 10, 2009).

MERV. Filter minimum efficiency reporting value, based on ASHRAE 52.2–1999.

MAXIMUM INCREMENTAL REACTIVITY (MIR). The maximum change in weight of ozone formed by adding a compound to the "Base REactive Organic Gas (ROG) Mixture" per weight of compound added, expressed to hundreths of a gram (g O^3/g ROC).

PRODUCT-WEIGHTED MIR (PWMIR). The sum of all weighted-MIR for all ingredients in a product subject to this article. The PWMIR is the total product reactivity expressed to hundredths of a gram of ozone formed per gram of product (excluding container and packaging).

PSIG. Pounds per square inch, guage.

REACTIVE ORGANIC COMPOUND (ROC). Any compound that has the potential, once emitted, to contribute to ozone formation in the troposphere.

SCHRADER ACCESS VALVES. Access fittings with a valve core installed.

SHORT RADIUS ELBOW. Pipe fitting installed between two lengths of pipe or tubing to allow a change of direction, with a radius 1.0 times the pipe diameter.

SUPERMARKET. For the purposes of Section 5.508.2, a supermarket is any retail food facility with 8,000 square feet or more conditioned area, and that utilizes either refrigerated display cases, or walk-in coolers or freezers connected to remote compressor units or condensing units.

VOC. A volatile organic compound broadly defined as a chemical compound based on carbon chains or rings with vapor pressures greater than 0.1 millimeters of mercury at room temperature. These compounds typically contain hydrogen and may contain oxygen, nitrogen and other elements. See CCR Title 17, Section 94508(a)

Note: Where specific regulations are cited from different agencies such as SCAQMD, ARB, etc., the VOC definition included in that specific regulation is the one that prevails for the specific measure in question.

SECTION 5.503 FIREPLACES
[Y ☐ | N/A ■] **5.503.1 FIREPLACES.** Install only a direct-vent sealed-combustion gas or sealed wood-burning fireplace, or a sealed woodstove or pellet stove, and refer to residential requirements in the California Energy Code, Title 24, Part 6, Subchapter 7, Section 150. Woodstoves, pellet stoves and fireplaces shall comply with applicable local ordinances.

5.503.1.1 Woodstoves. Woodstoves and pellet stoves shall comply with U.S. EPA New Source Performance Standards (NSPS) emission limits as applicable, and shall have a permanent label indicating they are certified to meet the emission limits.

SECTION 5.504 POLLUTANT CONTROL
[Y ■ | N/A ☐ | CONSTRUCTION] **5.504.1 TEMPORARY VENTILATION.** The permanent HVAC system shall only be used during construction if necessary to condition the building or areas of addition or alteration within the required temperature range for material and equipment installation. If the HVAC system is used during construction, use return air filters with a Minimum Efficiency Reporting Value (MERV) of 8, based on ASHRAE 52.2-1999, or an average efficiency of 30% based on ASHRAE 52.1-1992 Replace all filters immediately prior to occupancy, or, if the building is occupied during alteration, at the conclusion of construction.

[Y ■ | N/A ☐] **5.504.3 Covering of duct openings and protection of mechanical equipment during construction.** At the time of rough installation and during storage on the construction site until final startup of the heating, cooling and ventilation equipment, all duct and other related air distribution component openings shall be covered with tape, plastic, sheetmetal or other methods acceptable to the enforcing agency to reduce the amount of dust, water and debris which may enter the system.

DISCLAIMER: THIS DOCUMENT IS PROVIDED AND INTENDED TO BE USED AS A MEANS TO INDICATE AREAS OF COMPLIANCE WITH THE 2016 CALIFORNIA GREEN BUILDING STANDARDS (CALGREEN) CODE. DUE TO THE VARIABLES BETWEEN BUILDING DEPARTMENT JURISDICTIONS, THIS CHECKLIST IS TO BE USED ON AN INDIVIDUAL PROJECT BASIS AND MAY BE MODIFIED BY THE END USER TO MEET THOSE INDIVIDUAL NEEDS. THE END USER ASSUMES ALL RESPONSIBILITY ASSOCIATED WITH THE USE OF THIS DOCUMENT, INCLUDING VERIFICATION WITH THE FULL CODE.

SMS ARCHITECTS
100 Progress | Suite 250
Irvine, California 92618
949.757.3240 | www.sms-arch.com

CONSTANT

DANA POINT HARBOR PARTNERS

PROJECT NAME:
DANA POINT HARBOR COMMERCIAL CORE
BUILDING 12
1290 HARBOR WAY
DANA POINT, CA 92629

CLIENT
B|W|P BURNHAM|WARD PROPERTIES

LICENSED ARCHITECT
BRANDON DEDMON
No. C-37432
11.30.23
Exp. Date
STATE OF CALIFORNIA

No.	DATE	ISSUE
	9/30/2022	50% SCHEMATIC DESIGN
	10/28/2022	100% SCHEMATIC DESIGN
	02/10/2023	100% DESIGN DEVELOPMENT
	03/17/2023	50% CONSTRUCTION DOCUMENTS
A	04/21/2023	COUNTY RESUBMITTAL
B	10/09/2024	CITY PLANNING RESUBMITTAL

DRAWINGS AND WRITTEN MATERIAL APPEARING HEREIN CONSTITUTE ORIGINAL AND UNPUBLISHED WORK OF SMS ARCHITECTS AND MAY NOT BE DUPLICATED, USED OR DISCLOSED WITHOUT WRITTEN CONSENT OF THE ARCHITECT

PROJECT NO. 22039
DATE JANUARY 25, 2023
DRAWING TITLE
CALIFORNIA GREEN CODE NOTES

DRAWING NO.
A0.4.2

C:\Users\Brandi\Documents\22039_DPH_Building 12-Arch_brandi@sms-arch.com.rvt
10/8/2024 5:08:41 PM

CITY OF DANA POINT
PLANNING DIVISION
This plan has been reviewed for ZONING ONLY and meets the requirements of Title 9 of the Dana Point Municipal Code.
APPROVED KBN
DATE 10/21/24
COMMENTS BUILDING 12 (OC PERMIT PKG21-0516) PER CDP13-0018(I).

Zoning: CanningK 11/13/2024
Building&Safety: OCPWAzarvandB 12/22/2025
Permits: BNR21-0246, ELE21-0853, MEC21-0514, PLB21-0900

County of Orange - OC Public Works
OC Development Services
APPROVED
This set of plans and specifications must be kept on the job at all times. It is unlawful to make any changes or alterations to these plans without written permission from OC Public Works/ OC Development Services of Orange County. The stamping of these plan specifications SHALL NOT be held to permit or be an approval of the violation of any provisions of any County Ordinance or State law.
Hind Tshetshasee
BUILDING OFFICIAL

AIA California

2019 CALIFORNIA GREEN BUILDING STANDARDS CODE

NONRESIDENTIAL MANDATORY MEASURES, SHEET 1 (January 2020, Includes August 2019 Supplement)

Y = YES
N/A = NOT APPLICABLE
RESPON. PARTY = RESPONSIBLE PARTY (ie: ARCHITECT, ENGINEER, OWNER, CONTRACTOR, INSPECTOR ETC.)

5.504.4 FINISH MATERIAL POLLUTANT CONTROL. Finish materials shall comply with Sections 5.504.4.1 through 5.504.4.6.

5.504.4.1 Adhesives, sealants and caulks. Adhesives, sealants, and caulks used on the project shall meet the requirements of the following standards:

1. Adhesives, adhesive bonding primers, adhesive primers, sealants, sealant primers and caulks shall comply with local or regional air pollution control or air quality management district rules where applicable, or SCAQMD Rule 1168 VOC limits, as shown in Tables 5.504.4.1 and 5.504.4.2. Such products also shall comply with the Rule 1168 prohibition on the use of certain toxic compounds (chloroform, ethylene dichloride, methylene chloride, perchloroethylene and trichloroethylene), except for aerosol products as specified in subsection 2, below.

2. Aerosol adhesives, and smaller unit sizes of adhesives, and sealant or caulking compounds (in units of product, less packaging, which do not weigh more than one pound and do not consist of more than 16 fluid ounces) shall comply with statewide VOC standards and other requirements, including prohibitions on use of certain toxic compounds, of *California Code of Regulations*, Title 17, commencing with Section 94507.

TABLE 5.504.4.1 - ADHESIVE VOC LIMIT[1,2]
Less Water and Less Exempt Compounds In Grams per Liter

ARCHITECTURAL APPLICATIONS	CURRENT VOC LIMIT
INDOOR CARPET ADHESIVES	50
CARPET PAD ADHESIVES	50
OUTDOOR CARPET ADHESIVES	150
WOOD FLOORING ADHESIVES	100
RUBBER FLOOR ADHESIVES	60
SUBFLOOR ADHESIVES	50
CERAMIC TILE ADHESIVES	65
VCT & ASPHALT TILE ADHESIVES	50
DRYWALL & PANEL ADHESIVES	50
COVE BASE ADHESIVES	50
MULTIPURPOSE CONSTRUCTION ADHESIVES	70
STRUCTURAL GLAZING ADHESIVES	100
SINGLE-PLY ROOF MEMBRANE ADHESIVES	250
OTHER ADHESIVES NOT SPECIFICALLY LISTED	50
SPECIALTY APPLICATIONS	
PVC WELDING	510
CPVC WELDING	490
ABS WELDING	325
PLASTIC CEMENT WELDING	250
ADHESIVE PRIMER FOR PLASTIC	550
CONTACT ADHESIVE	80
SPECIAL PURPOSE CONTACT ADHESIVE	250
STRUCTURAL WOOD MEMBER ADHESIVE	140
TOP & TRIM ADHESIVE	250
SUBSTRATE SPECIFIC APPLICATIONS	
METAL TO METAL	30
PLASTIC FOAMS	50
POROUS MATERIAL (EXCEPT WOOD)	50
WOOD	30
FIBERGLASS	80

1. IF AN ADHESIVE IS USED TO BOND DISSIMILAR SUBSTRATES TOGETHER, THE ADHESIVE WITH THE HIGHEST VOC CONTENT SHALL BE ALLOWED.

2. FOR ADDITIONAL INFORMATION REGARDING METHODS TO MEASURE THE VOC CONTENT SPECIFIED IN THIS TABLE, SEE SOUTH COAST AIR QUALITY MANAGEMENT DISTRICT RULE 1168, www.arb.ca.gov/DRDB/SC/CURHTML/R1168.PDF

TABLE 5.504.4.2 - SEALANT VOC LIMIT
Less Water and Less Exempt Compounds In Grams per Liter

SEALANTS	CURRENT VOC LIMIT
ARCHITECTURAL	250
MARINE DECK	760
NONMEMBRANE ROOF	300
ROADWAY	250
SINGLE-PLY ROOF MEMBRANE	450
OTHER	420
SEALANT PRIMERS	
ARCHITECTURAL	
NONPOROUS	250
POROUS	775
MODIFIED BITUMINOUS	500
MARINE DECK	760
OTHER	750

NOTE: FOR ADDITIONAL INFORMATION REGARDING METHODS TO MEASURE THE VOC CONTENT SPECIFIED IN THESE TABLES, SEE SOUTH COAST AIR QUALITY MANAGEMENT DISTRICT RULE 1168.

5.504.4.3 Paints and coatings. Architectural paints and coatings shall comply with VOC limits in Table 1 of the ARB Architectural Coatings Suggested Control Measure, as shown in Table 5.504.4.3, unless more stringent local limits apply. The VOC content limit for coatings that do not meet the definitions for the specialty coatings categories listed in Table 5.504.4.3 shall be determined by classifying the coating as a Flat, Nonflat or Nonflat-High Gloss coating, based on its gloss, as defined in Subsections 4.21, 4.36 and 4.37 of the 2007 California Air Resources Board Suggested Control Measure, and the corresponding Flat, Nonflat or Nonflat-High Gloss VOC limit in Table 5.504.4.3 shall apply.

5.504.4.3.1 Aerosol Paints and coatings. Aerosol paints and coatings shall meet the PWMIR Limits for ROC in Section 94522(a)(3) and other requirements, including prohibitions on use of certain toxic compounds and ozone depleting substances, in Sections 94522(c)(2) and (d)(2) of *California Code of Regulations*, Title 17, commencing with Section 94520; and in areas under the jurisdiction of the Bay Area Air Quality Management District additionally comply with the percent VOC by weight of product limits of Regulation 8 Rule 49.

TABLE 5.504.4.3 - VOC CONTENT LIMITS FOR ARCHITECTURAL COATINGS[2,3]
GRAMS OF VOC PER LITER OF COATING, LESS WATER & LESS EXEMPT COMPOUNDS

COATING CATEGORY	CURRENT VOC LIMIT
FLAT COATINGS	50
NONFLAT COATINGS	100
NONFLAT HIGH GLOSS COATINGS	150
SPECIALTY COATINGS	
ALUMINUM ROOF COATINGS	400
BASEMENT SPECIALTY COATINGS	400
BITUMINOUS ROOF COATINGS	50
BITUMINOUS ROOF PRIMERS	350
BOND BREAKERS	350
CONCRETE CURING COMPOUNDS	350
CONCRETE/MASONRY SEALERS	100
DRIVEWAY SEALERS	50
DRY FOG COATINGS	150
FAUX FINISHING COATINGS	350
FIRE RESISTIVE COATINGS	350
FLOOR COATINGS	100
FORM-RELEASE COMPOUNDS	250
GRAPHIC ARTS COATINGS (SIGN PAINTS)	500
HIGH-TEMPERATURE COATINGS	420
INDUSTRIAL MAINTENANCE COATINGS	250
LOW SOLIDS COATINGS[1]	120
MAGNESITE CEMENT COATINGS	450
MASTIC TEXTURE COATINGS	100
METALLIC PIGMENTED COATINGS	500
MULTICOLOR COATINGS	250
PRETREATMENT WASH PRIMERS	420
PRIMERS, SEALERS, & UNDERCOATERS	100
REACTIVE PENETRATING SEALERS	350
RECYCLED COATINGS	250
ROOF COATINGS	50
RUST PREVENTATIVE COATINGS	250
SHELLACS:	
CLEAR	730
OPAQUE	550
SPECIALTY PRIMERS, SEALERS & UNDERCOATERS	100
STAINS	250
STONE CONSOLIDANTS	450
SWIMMING POOL COATINGS	340
TRAFFIC MARKING COATINGS	100
TUB & TILE REFINISH COATINGS	420
WATERPROOFING MEMBRANES	250
WOOD COATINGS	275
WOOD PRESERVATIVES	350
ZINC-RICH PRIMERS	340

1. GRAMS OF VOC PER LITER OF COATING, INCLUDING WATER & EXEMPT COMPOUNDS

2. THE SPECIFIED LIMITS REMAIN IN EFFECT UNLESS REVISED LIMITS ARE LISTED IN SUBSEQUENT COLUMNS IN THE TABLE.

3. VALUES IN THIS TABLE ARE DERIVED FROM THOSE SPECIFIED BY THE CALIFORNIA AIR RESOURCES BOARD, ARCHITECTURAL COATINGS SUGGESTED CONTROL MEASURE, FEB. 1, 2008. MORE INFORMATION IS AVAILABLE FROM THE AIR RESOURCES BOARD.

5.504.4.3.2 Verification. Verification of compliance with this section shall be provided at the request of the enforcing agency. Documentation may include, but is not limited to, the following:

1. Manufacturer's product specification
2. Field verification of on-site product containers

5.504.4.4 Carpet Systems. All carpet installed in the building interior shall meet at least one of the testing and product requirements:

1. Carpet and Rug Institute's Green Label Plus Program.
2. Compliant with the VOC-emission limits and testing requirements specified in the California Department of Public Health Standard Method for the Testing and Evaluation of Volatile Organic Chemical Emissions from Indoor Sources Using Environmental Chambers, Version 1.1, February 2010 (also known as CDPH Standard Method V1.1 or Specification 01350).
3. NSF/ANSI 140 at the Gold level or higher;
4. Scientific Certifications Systems Sustainable Choice; or
5. Compliant with the Collaborative for High Performance Schools California (2014 CA-CHPS) Criteria listed in the CHPS High Performance Product Database.

5.504.4.4.1 Carpet cushion. All carpet cushion installed in the building interior shall meet the requirements of the Carpet and Rug Institute Green Label program.

5.504.4.4.2 Carpet adhesive. All carpet adhesive shall meet the requirements of Table 5.504.4.1.

5.504.4.5 Composite wood products. Hardwood plywood, particleboard and medium density fiberboard composite wood products used on the interior or exterior of the buildings shall meet the requirements for formaldehyde as specified in ARB's Air Toxics Control Measure (ATCM) for Composite Wood (17 CCR 93120 et seq.). Those materials not exempted under the ATCM must meet the specified emission limits, as shown in Table 5.504.4.5.

5.504.4.5.3 Documentation. Verification of compliance with this section shall be provided as requested by the enforcing agency. Documentation shall include at least one of the following:

1. Product certifications and specifications.
2. Chain of custody certifications.
3. Product labeled and invoiced as meeting the Composite Wood Products regulation (see CCR, Title 17, Section 93120, et seq.).
4. Exterior grade products marked as meeting the PS-1 or PS-2 standards of the Engineered Wood Association, the Australian AS/NZS 2269 or European 636 3S standards.
5. Other methods acceptable to the enforcing agency.

TABLE 5.504.4.5 - FORMALDEHYDE LIMITS[1]
MAXIMUM FORMALDEHYDE EMISSIONS IN PARTS PER MILLION

PRODUCT	CURRENT LIMIT
HARDWOOD PLYWOOD VENEER CORE	0.05
HARDWOOD PLYWOOD COMPOSITE CORE	0.05
PARTICLE BOARD	0.09
MEDIUM DENSITY FIBERBOARD	0.11
THIN MEDIUM DENSITY FIBERBOARD[2]	0.13

1. VALUES IN THIS TABLE ARE DERIVED FROM THOSE SPECIFIED BY THE CALIFORNIA AIR RESOURCES BOARD, AIR TOXICS CONTROL MEASURE FOR COMPOSITE WOOD AS TESTED IN ACCORDANCE WITH ASTM E 1333. FOR ADDITIONAL INFORMATION, SEE CALIFORNIA CODE OF REGULATIONS, TITLE 17, SECTIONS 93120 THROUGH 93120.12.

2. THIN MEDIUM DENSITY FIBERBOARD HAS A MAXIMUM THICKNESS OF 5/16 INCHES (8 MM).

5.504.4.6 Resilient flooring systems. For 80 percent of floor area receiving resilient flooring, installed resilient flooring shall meet at least one of the following:

1. Certified under the Resilient Floor Covering Institute (RFCI) FloorScore program;
2. Compliant with the VOC-emission limits and testing requirements specified in the California Department of Public Health's 2010 Standard Method for the Testing and Evaluation Chambers, Version 1.1, February 2010;
3. Compliant with the Collaborative for High Performance Schools California (2014 CA-CHPS) Criteria and listed in the CHPS High Performance Product Database; or
4. Products certified under UL GREENGUARD Gold (formerly the Greenguard Children's & Schools Program).

5.504.4.6.1 Verification of compliance. Documentation shall be provided verifying that resilient flooring materials meet the pollutant emission limits.

5.504.5.3 Filters. In mechanically ventilated buildings, provide regularly occupied areas of the building with air filtration media for outside and return air that provides at least a Minimum Efficiency Reporting Value (MERV) of 13. MERV 13 filters shall be installed prior to occupancy, and recommendations for maintenance with filters of the same value shall be included in the operation and maintenance manual.

Exceptions: Existing mechanical equipment.

5.504.5.3.1 Labeling. Installed filters shall be clearly labeled by the manufacturer indicating the MERV rating.

5.504.7 ENVIRONMENTAL TOBACCO SMOKE (ETS) CONTROL. Where outdoor areas are provided for smoking, prohibit smoking within 25 feet of building entries, outdoor air intakes and operable windows and within the building as already prohibited by other laws or regulations; or as enforced by ordinances, regulations or policies of any city, county, city and county, California Community College, campus of the California State University, or campus of the University of California, whichever are more stringent. When ordinances, regulations or policies are not in place, post signage to inform building occupants of the prohibitions.

SECTION 5.505 INDOOR MOISTURE CONTROL

5.505.1 INDOOR MOISTURE CONTROL. Buildings shall meet or exceed the provisions of California Building Code, CCR, Title 24, Part 2, Sections 1202 (Ventilation) and Chapter 14 (Exterior Walls). For additional measures, see Section 5.407.2 of this code.

SECTION 5.506 INDOOR AIR QUALITY

5.506.1 OUTSIDE AIR DELIVERY. For mechanically or naturally ventilated spaces in buildings, meet the minimum requirements of Section 120.1 (Requirements For Ventilation) of the *California Energy Code*, or the applicable local code, whichever is more stringent, and Division 1, Chapter 4 of CCR, Title 8.

5.506.2 CARBON DIOXIDE (CO_2) MONITORING. For buildings or additions equipped with demand control ventilation, CO_2 sensors and ventilation controls shall be specified and installed in accordance with the requirements of the California Energy Code, Section 120(c)(4).

SECTION 5.507 ENVIRONMENTAL COMFORT

5.507.4 ACOUSTICAL CONTROL. Employ building assemblies and components with Sound Transmission Class (STC) values determined in accordance with ASTM E 90 and ASTM E 413, or Outdoor-Indoor Sound Transmission Class (OITC) determined in accordance with ASTM E 1332, using either the prescriptive or performance method in Section 5.507.4.1 or 5.507.4.2.

Exception: Buildings with few or no occupants or where occupants are not likely to be affected by exterior noise, as determined by the enforcement authority, such as factories, stadiums, storage, enclosed parking structures and utility buildings.

Exception: [DSA-SS] For public schools and community colleges, the requirements of this section and all subsections apply only to new construction.

5.507.4.1 Exterior noise transmission, prescriptive method. Wall and roof-ceiling assemblies exposed to the noise source making up the building or addition envelope or altered envelope shall meet a composite STC rating of at least 50 or a composite OITC rating of no less than 40, with exterior windows of a minimum STC of 40 or OITC of 30 in the following locations:

1. Within the 65 CNEL noise contour of an airport.

   Exceptions:

   1. L_{dn} or CNEL for military airports shall be determined by the facility Air Installation Compatible Land Use Zone (AICUZ) plan.
   2. L_{dn} or CNEL for other airports and heliports for which a land use plan has not been developed shall be determined by the local general plan noise element.

2. Within the 65 CNEL or L_{dn} noise contour of a freeway or expressway, railroad, industrial source or fixed-guideway source as determined by the Noise Element of the General Plan.

5.507.4.1.1. Noise exposure where noise contours are not readily available. Buildings exposed to a noise level of 65 dB L_{eq} - 1-hr during any hour of operation shall have building, addition or alteration exterior wall and roof-ceiling assemblies exposed to the noise source meeting a composite STC rating of at least 45 (or OITC 35), with exterior windows of a minimum STC of 40 (or OITC 30).

5.507.4.2 Performance Method. For buildings located as defined in Section 5.507.4.1 or 5.507.4.1.1, wall and roof-ceiling assemblies exposed to the noise source making up the building or addition envelope or altered envelope shall be constructed to provide an interior noise environment attributable to exterior sources that does not exceed an hourly equivalent noise level (Leq-1Hr) of 50 dBA in occupied areas during any hour of operation.

5.507.4.2.1 Site Features. Exterior features such as sound walls or earth berms may be utilized as appropriate to the building, addition or alteration project to mitigate sound migration to the interior.

5.507.4.2.2 Documentation of Compliance. An acoustical analysis documenting complying interior sound levels shall be prepared by personnel approved by the architect or engineer of record.

5.507.4.3 Interior sound transmission. Wall and floor-ceiling assemblies separating tenant spaces and tenant spaces and public places shall have an STC of at least 40.

Note: Examples of assemblies and their various STC ratings may be found at the California Office of Noise Control: www.toolbase.org/PDF/CaseStudies/stc_icc_ratings.pdf.

SECTION 5.508 OUTDOOR AIR QUALITY

5.508.1 Ozone depletion and greenhouse gas reductions. Installations of HVAC, refrigeration and fire suppression equipment shall comply with Sections 5.508.1.1 and 5.508.1.2.

5.508.1.1 Chlorofluorocarbons (CFCs). Install HVAC, refrigeration and fire suppression equipment that do not contain CFCs.

5.508.1.2 Halons. Install HVAC, refrigeration and fire suppression equipment that do not contain Halons.

5.508.2 Supermarket refrigerant leak reduction. New commercial refrigeration systems shall comply with the provisions of this section when installed in retail food stores 8,000 square feet or more conditioned area, and that utilize either refrigerated display cases, or walk-in coolers or freezers connected to remote compressor units or condensing units. The leak reduction measures apply to refrigeration systems containing high-global-warming potential (high-GWP) refrigerants with a GWP of 150 or greater. New refrigeration systems include both new facilities and the replacement of existing refrigeration systems in existing facilities.

Exception: Refrigeration systems containing low-global warming potential (low-GWP) refrigerant with a GWP value less than 150 are not subject to this section. Low-GWP refrigerants are nonozone-depleting refrigerants that include ammonia, carbon dioxide (CO_2), and potentially other refrigerants.

5.508.2.1 Refrigerant piping. Piping compliant with the California Mechanical Code shall be installed to be accessible for leak protection and repairs. Piping runs using threaded pipe, copper tubing with an outside diameter (OD) less than 1/4 inch, flared tubing connections and short radius elbows shall not be used in refrigerant systems except as noted below.

5.508.2.1.1 Threaded pipe. Threaded connections are permitted at the compressor rack.

5.508.2.1.2 Copper pipe. Copper tubing with an OD less than 1/4 inch may be used in systems with a refrigerant charge of 5 pounds or less.

5.508.2.1.2.1 Anchorage. One-fouth-inch OD tubing shall be securely clamped to a rigid base to keep vibration levels below 8 mils.

5.508.2.1.3 Flared tubing connections. Double-flared tubing connections may be used for pressure controls, valve pilot lines and oil.

Exception: Single-flared tubing connections may be used with a multiring seal coated with industrial sealant suitable for use with refrigerants and tightened in accordance with manufacturer's recommendations.

5.508.2.1.4 Elbows. Short radius elbows are only permitted where space limitations prohibit use of long radius elbows.

5.508.2.2 Valves. Valves Valves and fittings shall comply with the *California Mechanical Code* and as follows.

5.508.2.2.1 Pressure relief valves. For vessels containing high-GWP refrigerant, a rupture disc shall be installed between the outlet of the vessel and the inlet of the pressure relief valve.

5.508.2.2.1.1 Pressure detection. A pressure gauge, pressure transducer or other device shall be installed in the space between the rupture disc and the relief valve inlet to indicate a disc rupture or discharge of the relief valve.

5.508.2.2.2 Access valves. Only Schrader access valves with a brass or steel body are permitted for use.

5.508.2.2.2.1 Valve caps. For systems with a refrigerant charge of 5 pounds or more, valve caps shall be brass or steel and not plastic.

5.508.2.2.2.2 Seal caps. If designed for it, the cap shall have a neoprene O-ring in place.

5.508.2.2.2.2.1 Chain tethers. Chain tethers to fit ovr the stem are required for valves designed to have seal caps.

Exception: Valves with seal caps that are not removed from the valve during stem operation.

5.508.2.3 Refrigerated service cases. Refrigerated service cases holding food products containing vinegar and salt shall have evaporator coils of corrosion-resistant material, such as stainless steel; or be coated to prevent corrosion from these substances.

5.508.2.3.1 Coil coating. Consideration shall be given to the heat transfer efficiency of coil coating to maximize energy efficiency.

5.508.2.4 Refrigerant receivers. Refrigerant receivers with capacities greater than 200 pounds shall be fitted with a device tha indicates the level of refrigerant in the receiver.

5.508.2.5 Pressure testing. The system shall be pressure tested during installation prior to evacuation and charging.

5.508.2.5.1 Minimum pressure. The system shall be charged with regulated dry nitrogen and appropriate tracer gas to bring system pressure up to 300 psig minimum.

5.508.2.5.2 Leaks. Check the system for leaks, repair any leaks, and retest for pressure using the same gauge.

5.508.2.5.3 Allowable pressure change. The system shall stand, unaltered, for 24 hours with no more than a +/- one pound pressure change from 300 psig, measured with the same gauge.

5.508.2.6 Evacuation. The system shall be evacuated after pressure testing and prior to charging.

5.508.2.6.1 First vacuum. Pull a system vacuum down to at least 1000 microns (+/- 50 microns), and hold for 30 minutes.

5.508.2.6.2 Second vacuum. Pull a second system vacuum to a minimum of 500 microns and hold for 30 minutes.

5.508.2.6.3 Third vacuum. Pull a third vacuum down to a minimum of 300 microns, and hold for 24 hours with a maximum drift of 100 microns over a 24-hour period.

CHAPTER 7
INSTALLER & SPECIAL INSPECTOR QUALIFICATIONS

702 QUALIFICATIONS

702.1 INSTALLER TRAINING. HVAC system installers shall be trained and certified in the proper installation of HVAC systems including ducts and equipment by a nationally or regionally recognized training or certification program. Uncertified persons may perform HVAC installations when under the direct supervision and responsibility of a person trained and certified to install HVAC systems or contractor licensed to install HVAC systems. Examples of acceptable HVAC training and certification programs include but are not limited to the following:

1. State certified apprenticeship programs.
2. Public utility training programs.
3. Training programs sponsored by trade, labor or statewide energy consulting or verification organizations.
4. Programs sponsored by manufacturing organizations.
5. Other programs acceptable to the enforcing agency.

702.2 SPECIAL INSPECTION [HCD]. When required by the enforcing agency, the owner or the responsible entity acting as the owner's agent shall employ one or more special inspectors to provide inspection or other duties necessary to substantiate compliance with this code. Special inspectors shall demonstrate competence to the satisfaction of the enforcing agency for the particular type of inspection or task to be performed. In addition to other certifications or qualifications acceptable to the enforcing agency, the following certifications or education may be considered by the enforcing agency when evaluating the qualifications of a special inspector:

1. Certification by a national or regional green building program or standard publisher.
2. Certification by a statewide energy consulting or verification organization, such as HERS raters, building performance contractors, and home energy auditors.
3. Successful completion of a third party apprentice training program in the appropriate trade.
4. Other programs acceptable to the enforcing agency.

Notes:

1. Special inspectors shall be independent entities with no financial interest in the materials or the project they are inspecting for compliance with this code.
2. HERS raters are special inspectors certified by the California Energy Commission (CEC) to rate homes in California according to the Home Energy Rating System (HERS).

[BSC-CG] When required by the enforcing agency, the owner or the responsible entity acting as the owner's agent shall employ one or more special inspectors to provide inspection or other duties necessary to substantiate compliance with this code. Special inspectors shall demonstrate competence to the satisfaction of the enforcing agency for the particular type of inspection or task to be performed. In addition, the special inspector shall have a certification from a recognized state, national or international association, as determined by the local agency. The area of certification shall be closely related to the primary job function, as determined by the local agency.

Note: Special inspectors shall be independent entities with no financial interest in the materials or the project they are inspecting for compliance with this code.

703 VERIFICATIONS

703.1 DOCUMENTATION. Documentation used to show compliance with this code shall include but is not limited to, construction documents, plans, specifications, builder or installer certification, inspection reports, or other methods acceptable to the enforcing agency which demonstrate substantial conformance. When specific documentation or special inspection is necessary to verify compliance, that method of compliance will be specified in the appropriate section or identified applicable checklist.

DISCLAIMER: THIS DOCUMENT IS PROVIDED AND INTENDED TO BE USED AS A MEANS TO INDICATE AREAS OF COMPLIANCE WITH THE 2016 CALIFORNIA GREEN BUILDING STANDARDS (CALGREEN) CODE. DUE TO THE VARIABLES BETWEEN BUILDING DEPARTMENT JURISDICTIONS, THIS CHECKLIST IS TO BE USED ON AN INDIVIDUAL PROJECT BASIS AND MAY BE MODIFIED BY THE END USER TO MEET THOSE INDIVIDUAL NEEDS. THE END USER ASSUMES ALL RESPONSIBILITY ASSOCIATED WITH THE USE OF THIS DOCUMENT, INCLUDING VERIFICATION WITH THE FULL CODE.

C:\Users\Brandf\Documents\22039_BPH_Building 12-Arch_brandf@sms-arch.com.rvt

SMS ARCHITECTS
100 Progress | Suite 250
Irvine, California 92618
949.757.3240 | www.sms-arch.com

CONSTANT

DANA POINT HARBOR PARTNERS

PROJECT NAME
DANA POINT HARBOR COMMERCIAL CORE
BUILDING 12
1290 HARBOR WAY
DANA POINT, CA 92629

CLIENT
BWP BURNHAM|WARD PROPERTIES

LICENSED ARCHITECT
BRANDON DEDMON
No. C-37432
11.30.23
Exp. Date
STATE OF CALIFORNIA

No.	DATE	ISSUE
	9/30/2022	50% SCHEMATIC DESIGN
	10/28/2022	100% SCHEMATIC DESIGN
	02/10/2023	100% DESIGN DEVELOPMENT
	03/17/2023	50% CONSTRUCTION DOCUMENTS
A	04/21/2023	COUNTY RESUBMITTAL
B	10/09/2024	CITY PLANNING RESUBMITTAL

DRAWINGS AND WRITTEN MATERIAL APPEARING HEREIN CONSTITUTE ORIGINAL AND UNPUBLISHED WORK OF SMS ARCHITECTS AND MAY NOT BE DUPLICATED, USED OR DISCLOSED WITHOUT WRITTEN CONSENT OF THE ARCHITECT

PROJECT NO. 22039
DATE JANUARY 25, 2023
DRAWING TITLE
CALIFORNIA GREEN CODE NOTES

DRAWING NO.
A0.4.3

10/8/2024 5:08:42 PM

CITY OF DANA POINT
PLANNING DIVISION
This plan has been reviewed for ZONING ONLY and meets the requirements of Title 9 of the Dana Point Municipal Code.

APPROVED KBN

DATE 10/21/24

COMMENTS BUILDING 12 (OC PERMIT PKG21-0516) PER CDP13-0018(I).

Zoning: CanningK 11/13/2024

Building&Safety: OCPWAzarvandB 12/22/2025

Permits: BNR21-0246, ELE21-0853, MEC21-0514, PLB21-0900

County of Orange - OC Public Works
OC Development Services
APPROVED

This set of plans and specifications must be kept on the job at all times. It is unlawful to make any changes or alterations to these plans without written permission from OC Public Works, OC Development Services of Orange County. The stamping of these plan specifications SHALL NOT be held to permit or be an approval of the violation of any provisions of any County Ordinance or State law.

Hind Tahtabaee
BUILDING OFFICIAL

PLANNING AREA CALCULATIONS COMPARISON

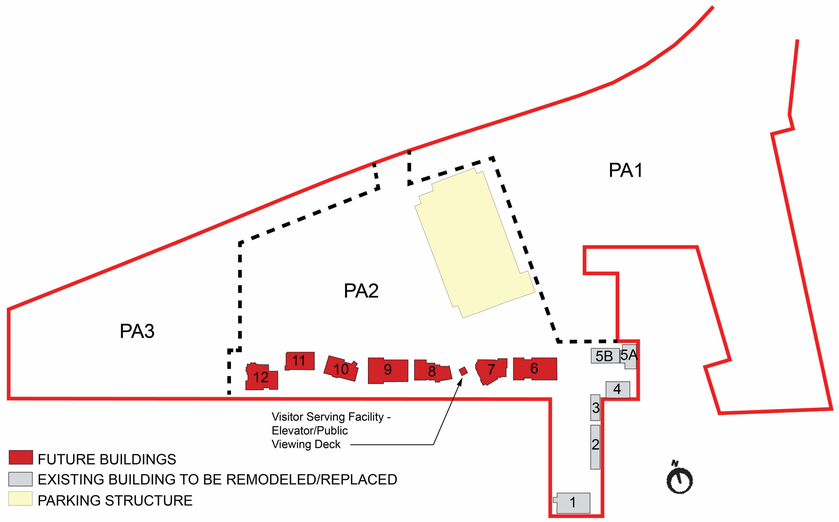



DANA POINT HARBOR PARTNERS PLANNING AREA CALCULATIONS CDP APPROVED

BUILDING NUMBER	EXISTING OR NEW	USE	HEIGHT (NOTE 1)	ALLOWABLE HEIGHTS (NOTE 2)	INDOOR RENTABLE	OUTDOOR AREA
BUILDING 1	New	Restaurant	35'-0"	35 Feet Max.	11,810	2,000
BUILDING 2	Existing	Restaurant	21'-7"	35 Feet Max.	3,394	606
BUILDING 3	Existing	Retail	20'-8"	35 Feet Max.	2,139	
BUILDING 4	Existing	Retail	30'-10"	35 Feet Max.	1,300	
		Office			2,636	
BUILDING 5A	Existing	Restaurant	35'-0"	35 Feet Max.	7,173	2,211
BUILDING 5B	Existing	Restaurant	20'-6"	35 Feet Max.	3,127	949
BUILDING 6*	New	Retail	54'-2"	60 Feet Max.	4,251	730
		Restaurant			8,461	
BUILDING 7	New	Retail	46'-4"	60 Feet Max.	6,867	
		Restaurant			3,060	720
		Office/Boater Misc.			2,909	
BUILDING 8	New	Retail	52'-8"	60 Feet Max.	5,760	
		Restaurant			7,291	740
BUILDING 9	New	Retail	50'-0"	60 Feet Max.	3,082	
		Restaurant			15,366	3,574
BUILDING 10	New	Restaurant	35'-0"	35 Feet Max.	6,268	3,321
		Reail			1,354	
BUILDING 11	New	Restaurant	35'-0"	35 Feet Max.	908	595
		Retail			5,282	
BUILDING 12	New	Restaurant	32'-0"	35 Feet Max.	10,212	4,648
TOTAL					**112,650**	**20,094**
BUILDING 11	New	Museum	35'-0"	35 Feet Max.	4,362	2,675
Elevator/Public Viewing Deck**	New	Elevator/Viewing Deck	59'-0"	60 Feet Max.	206	
PD - Boater Services	New	Boater Service	11'-0"	35 Feet Max.	1,425	
TOTAL					**118,643**	**22,769**

Dana Point Harbor Partners - Dana Point Harbor Revitalization - PA 2 Approved

Retail	30,035
Restaurant	77,070
Office	5,545
TOTAL	112,650
Visitor Serving Facilities	5,993
TOTAL	118,643

Dana Point Harbor Partners - Dana Point Harbor Revitalization - PA 2 Summary

Retail	31,017
Restaurant	75,948
Office	6,570
TOTAL	113,535
Visitor Serving Facilities	4,987
TOTAL	118,522

*The elevator that serves floors 1-2 also includes a 106 SF observation deck which is a public amenity and not included as indoor rentable square footage. It complies with CDP 13-0018(I) chapter 5.5 (c) 3 & 4 by providing a pedestrian link to the elevator from the parking structure and includes unobstructed views of the ocean and marinas. In addition, the elevator/observation deck does not create additional parking demand.

** Maximum allowed development area in planning area 2 is 119,000 SF per table 17-A in the local coastal program for Dana Point Harbor Revitalization Plan dated October 6, 2011.

DANA POINT HARBOR PARTNERS PLANNING AREA CALCULATIONS

BUILDING NUMBER	EXISTING OR NEW	USE	HEIGHT (NOTE 1)	ALLOWABLE HEIGHTS (NOTE 2)	INDOOR RENTABLE	OUTDOOR AREA
BUILDING 1	New	Restaurant	35'-0"	35 Feet Max.	11,809	2,000
BUILDING 2	Existing	Restaurant	21'-7"	35 Feet Max.	3,399	657
BUILDING 3	Existing	Retail	20'-8"	35 Feet Max.	2,153	
BUILDING 4	Existing	Retail	30'-10"	35 Feet Max.	1,352	
		Office			2,593	
BUILDING 5A	Existing	Restaurant	35'-0"	35 Feet Max.	7,206	2,195
BUILDING 5B	Existing	Restaurant	20'-6"	35 Feet Max.	3,142	966
BUILDING 6*	New	Retail	54'-2"	60 Feet Max.	7,254	
		Restaurant			4,976	748
BUILDING 7	New	Retail	46'-4"	60 Feet Max.	5,845	
		Restaurant			4,043	570
		Office/Boater Misc.			2,938	
BUILDING 8	New	Retail	52'-8"	60 Feet Max.	2,708	
		Restaurant			10,388	662
BUILDING 9	New	Retail	50'-0"	60 Feet Max.	3,970	
		Restaurant			14,595	2,413
BUILDING 10	New	Restaurant	35'-0"	35 Feet Max.	6,225	4,299
		Reail			1,344	
BUILDING 11	New	Retail	35'-0"	35 Feet Max.	6,391	613
		Office			1,039	
BUILDING 12	New	Restaurant	32'-0"	35 Feet Max.	10,165	5,094
TOTAL					**113,535**	**20,217**
BUILDING 11	New	Museum	35'-0"	35 Feet Max.	3,356	2,668
Elevator/Public Viewing Deck**	New	Elevator/Viewing Deck	59'-0"	60 Feet Max.	206	
PD - Boater Services	New	Boater Service	11'-0"	35 Feet Max.	1,425	
TOTAL					**118,522**	**22,885**

*Assumes Building 6 2nd level as single tenant.

**The elevator that serves floors 1-2 also includes a 106 SF observation deck which is a public amenity and not included as indoor rentable square footage. It complies with CDP 13-0018(I) chapter 5.5 (c) 3 & 4 by providing a pedestrian link to the elevator from the parking structure and includes unobstructed views of the ocean and marinas. In addition, the elevator/observation deck does not create additional parking demand.

SMS ARCHITECTS
100 Progress | Suite 250
Irvine, California 92618
949.757.3240 | www.sms-arch.com

CONSTANT

DANA POINT HARBOR PARTNERS

PROJECT NAME
DANA POINT HARBOR COMMERCIAL CORE
BUILDING 12
1290 HARBOR WAY
DANA POINT, CA 92629

CLIENT
BURNHAM | WARD PROPERTIES
B|W|P

LICENSED ARCHITECT
BRANDON DEDMON
No. C-37432
11.30.23
Exp. Date
STATE OF CALIFORNIA

No.	DATE	ISSUE
	9/30/2022	50% SCHEMATIC DESIGN
	10/28/2022	100% SCHEMATIC DESIGN
	02/10/2023	100% DESIGN DEVELOPMENT
	03/17/2023	50% CONSTRUCTION DOCUMENTS
A	04/21/2023	COUNTY RESUBMITTAL
B	10/09/2024	CITY PLANNING RESUBMITTAL

DRAWINGS AND WRITTEN MATERIAL APPEARING HEREIN CONSTITUTE ORIGINAL AND UNPUBLISHED WORK OF SMS ARCHITECTS AND MAY NOT BE DUPLICATED, USED OR DISCLOSED WITHOUT WRITTEN CONSENT OF THE ARCHITECT

PROJECT NO. 22039

DATE JANUARY 25, 2023

DRAWING TITLE
CDP COMPLIANCE

DRAWING NO.
A0.5.1

C:\Users\Brandt\Documents\22039_BPH_Building 12-Arch_brandt@sms-arch.com.rvt

10/8/2024 5:08:44 PM

CITY OF DANA POINT
PLANNING DIVISION

This plan has been reviewed for ZONING ONLY and meets the requirements of Title 9 of the Dana Point Municipal Code.

APPROVED KBN

DATE 10/21/24

COMMENTS BUILDING 12 (OC PERMIT PKG21-0516) PER CDP13-0018(I).

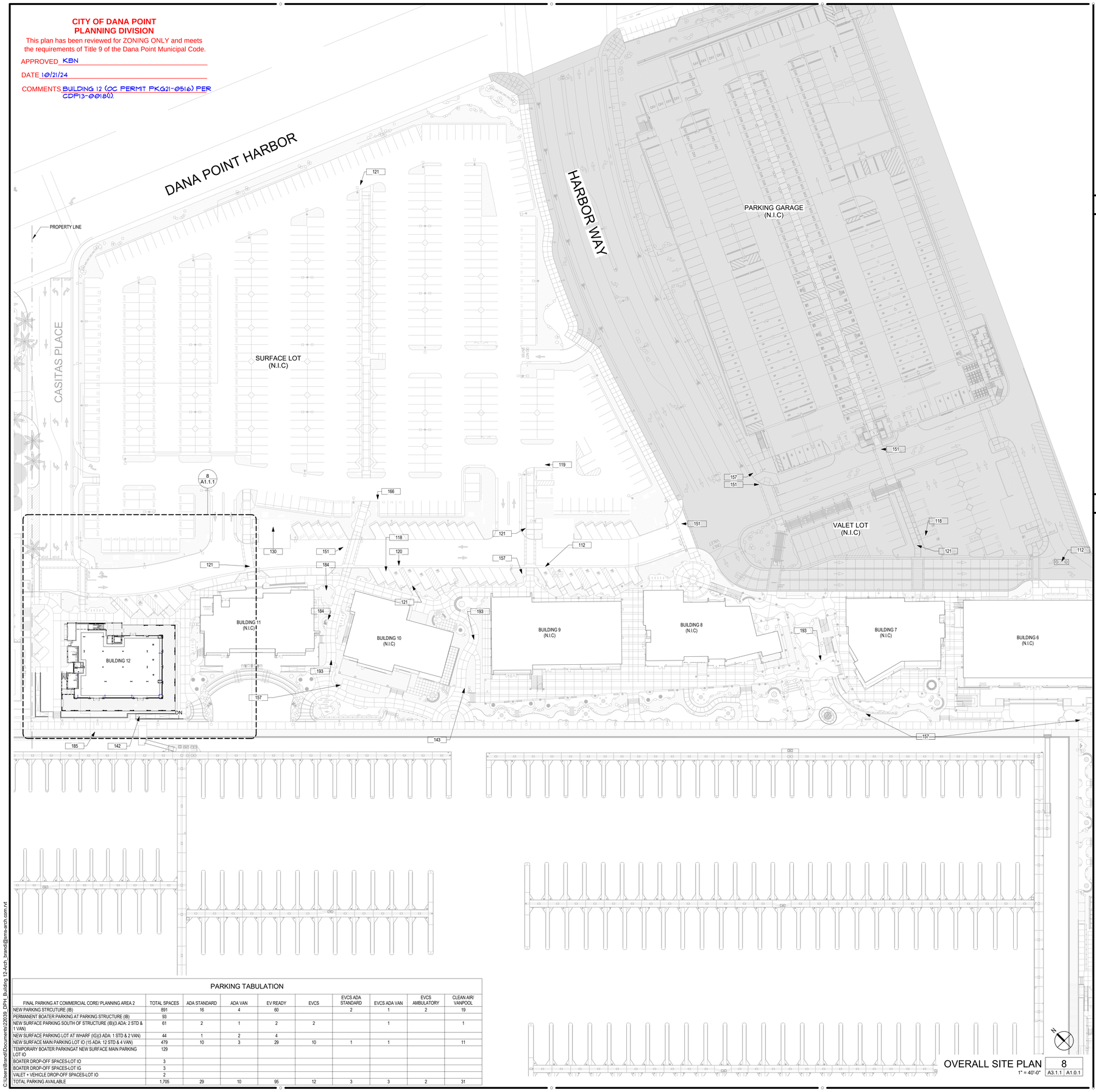

PARKING TABULATION

FINAL PARKING AT COMMERCIAL CORE/ PLANNING AREA 2	TOTAL SPACES	ADA STANDARD	ADA VAN	EV READY	EVCS	EVCS ADA STANDARD	EVCS ADA VAN	EVCS AMBULATORY	CLEAN AIR/ VANPOOL
NEW PARKING STRCUTURE (IB)	891	16	4	60		2	1	2	19
PERMANENT BOATER PARKING AT PARKING STRUCTURE (IB)	93								
NEW SURFACE PARKING SOUTH OF STRUCTURE (IB)(3 ADA: 2 STD & 1 VAN)	61	2	1	2	2		1		1
NEW SURFACE PARKING LOT AT WHARF (IG)(3 ADA: 1 STD & 2 VAN)	44	1	2	4					
NEW SURFACE MAIN PARKING LOT IO (15 ADA: 12 STD & 4 VAN)	479	10	3	29	10	1	1		11
TEMPORARY BOATER PARKINGAT NEW SURFACE MAIN PARKING LOT IO	129								
BOATER DROP-OFF SPACES-LOT IO	3								
BOATER DROP-OFF SPACES-LOT IG	3								
VALET + VEHICLE DROP-OFF SPACES-LOT IO	2								
TOTAL PARKING AVAILABLE	1,705	29	10	95	12	3	3	2	31

C:\Users\BrandD\Documents\22039_DPH_Building 12-Arch_brandd@sms-arch.com.rvt

Zoning: CanningK 11/13/2024

Building&Safety: OCPWAzarvandB 12/22/2025

Permits: BNR21-0246, ELE21-0853, MEC21-0514, PLB21-0900

County of Orange - OC Public Works
OC Development Services
APPROVED

This set of plans and specifications must be kept on the job at all times. It is unlawful to make any changes or alterations to these plans without written permission from OC Public Works, OC Development Services of Orange County. The stamping of these plan specifications SHALL NOT be held to permit or be an approval of the violation of any provisions of any County Ordinance or State law.

Hani Tehrbashan
BUILDING OFFICIAL

SITE PLAN GENERAL NOTES

01 NO REVISIONS SHALL BE MADE TO THESE PLANS WITHOUT THE APPROVAL OF THE ENGINEER ON RECORD.
02 ANY CONTRACTOR PERFORMING WORK AS INDICATED HEREON FOR THIS PROJECT SHALL FAMILIARIZE HIMSELF WITH THE SITE AND SHALL BE SOLELY RESPONSIBLE FOR ANY AND ALL DAMAGE TO THE EXISTING UTILITIES RESULTING DIRECTLY OR INDIRECTLY FROM HIS/HER OPERATIONS, WHETHER OR NOT SHOWN ON THESE PLANS.
03 THE CONTRACTOR SHALL DISPOSE OF ALL SURPLUS EARTH EXCAVATION OUTSIDE OF THE PROJECT AREA UNLESS APPROVED OTHERWISE BY THE ENGINEER OF RECORD. ALL ASPHALT, CONCRETE AND/OR PORTLAND CEMENT CONCRETE REMOVALS ARE TO BE DISPOSED OF OFF-SITE.
04 THE CONTRACTOR SHALL REVIEW AND VERIFY ALL CONDITIONS AND DIMENSIONS AT THE JOB SITE BEFORE COMMENCING ANY PORTION OF THE WORK; COMPARE ACTUAL CONDITIONS WITH DRAWINGS TO ASCERTAIN CONDITIONS UNDER WHICH WORK IS TO BE PERFORMED; CHECK AND CONFIRM LOCATION OF EXISTING STRUCTURES, EQUIPMENT, AND UTILITIES WHICH MAY AFFECT WORK. COMMENCEMENT OF WORK SHALL CONSTITUTE FULL ACCEPTANCE OF EXISTING SITE CONDITIONS. THE CONTRACTOR SHALL REPORT ALL DISCREPANCIES TO THE ENGINEER OF RECORD PRIOR TO COMMENCEMENT OF WORK.
05 THE CONTRACTOR SHALL ENACT ALL MEASURES TO PROTECT AND SAFEGUARD WORKERS AND THE GENERAL PUBLIC FROM INJURY DURING THE ENTIRE TIME OF CONSTRUCTION, MAINTAIN THE JOB SITE IN AN ORDERLY, CLEAN MANNER THROUGHOUT THE COURSE OF WORK AND NOT BLOCK LEGAL EXITS AND ENTRANCES. LEAVE WORK AREAS CLEAN, FREE OF DEBRIS AT END OF EACH DAY AND COMPLY WITH ALL APPLICABLE CODES.
06 ALL CONCRETE AND ASPHALT CONCRETE PAVEMENT TO BE REMOVED SHALL BE REMOVED UTILIZING A SAW CUT (MIN CUT DEPTH 1-1/2"), AND OR OTHER METHODS APPROVED BY ENGINEER OF RECORD.
07 THE CONTRACTOR SHALL ADJUST ALL UTILITY VALVE BOXES, MANHOLES, ETC. TO GRADE UPON COMPLETION OF PAVING. ASPHALTIC CONCRETE PAVEMENT SHALL ONLY BE USED TO PATCH AROUND RAISED UTILITIES IN ASPHALT STREETS.
08 THE CONTRACTOR SHALL REPLACE IN KIND, TO THE SATISFACTION OF THE OWNER, ANY PAVING, CURB AND GUTTER OR OTHER IMPROVEMENTS CUT, REMOVED, OR DAMAGED IN CONJUNCTION WITH THIS PROJECT.
09 CONTRACTOR AGREES THAT HE SHALL ASSUME SOLE AND COMPLETE RESPONSIBILITY FOR JOB SITE CONDITIONS DURING THE COURSE OF CONSTRUCTION OF THIS PROJECT, INCLUDING SAFETY OF ALL PERSONS AND PROPERTY. THIS REQUIREMENT SHALL APPLY CONTINUOUSLY AND NOT BE LIMITED TO NORMAL WORKING HOURS; AND THAT THE CONTRACTOR SHALL DEFEND, INDEMNIFY AND HOLD THE OWNER, THE ENGINEER OF RECORD AND THEIR REPRESENTATIVE, HARMLESS FROM ANY AND ALL LIABILITY, REAL OR ALLEGED, IN CONNECTION WITH THE PERFORMANCE OF WORK ON THIS PROJECT, EXCEPTING FOR LIABILITY ARISING FROM THE SOLE NEGLIGENCE OF THE OWNER OR THE ENGINEER OF RECORD.
10 CONTRACTOR SHALL PROVIDE FOR DUST CONTROL, TRAFFIC CONTROL AND RELATED CONSTRUCTION BEST MANAGEMENT PLAN AT ALL TIMES TO THE SATISFACTION OF THE OWNER AND THE CITY.
11 BARRICADES WITH FLASHING LIGHTS ARE TO BE MAINTAINED ON ALL OBSTRUCTUIONS WITHIN THE EXISTING STREET AT ALL TIMES. CONSTRUCTION WARNING SIGNS AND FLAGMEN ARE TO BE PRESENT AT THE JOB SITE.
12 THE CONTRACTOR SHALL NOTIFY UNDERGROUND SERVICE ALERT AT (1-800) 422-4133 TWO (2) DAYS PRIOR TO BEGINNING WORK. ALL UNDERGROUND UTILITIES AS SHOWN HEREON ON THE PLANS ARE BASED UPON REVIEW AVAILABLE RECORDS. IT IS THE SOLE RESPONSIBILITY OF THE CONTRACTOR TO "POT-HOLE" THE UTILITIES AS SHOWN HEREON IN ORDER TO PRECISELY LOCATE SAID UTILITES RELATIVE TO LINE AND GRADE PRIOR TO COMMENCEMENT OF WORK. ANY VARIATION OF THE UNDERGROUND UITILITY LOCATION IS TO BE BROUGHT TO THE ATTENTION OF THE ENGINEER OF RECORD PRIOR TO COMMENCEMENT OF CONSTRUCTION. COMMENCEMENT OF WORK SHALL CONSTITUTE FULL ACCEPTANCE AND RESPONSIBILITY OF ANY DAMAGE THAT MAY OCCUR TO ANY UNDERGROUND UTILITIES EITHER SHOWN OR NOT SHOWN ON THESE PLANS.
13 THE SANITARY SEWER, STORM DRAIN SYSTEM, WATER MAINS, GAS MAINS, AND ALL OTHER UNDERGROUND UTILITES SHALL BE PLACED UNDERGROUND PRIOR TO PAVING CONSTRUCTION.

SITE PLAN KEYNOTES

112 GREASE INTERCEPTOR. REFER TO CIVIL DRAWINGS FOR LOCATIONS AND PLUMBING DRAWINGS FOR SIZE AND SPECIFICATIONS.
118 ACCESSIBLE VAN PARKING SPACE 12' X 18' MARKED WITH INTERNATIONAL SYMBOL OF ACCESSIBILITY. ACCESSIBILITY SYMBOL TO BE PAINTED WITH CONTRACTOR GRADE ACRYLIC ON CONCRETE OR ASPHALT OR WOOD DECK SURFACE USING 70% CONTRAST COLOR OF BLUE WITH A SIZE OF 36" X 36". PARKING SPACE TO HAVE IDENTIFICATION SIGN MINIMUM 60"" ABOVE FINISH FLOOR - REFER TO LANDSCAPE DRAWINGS."
119 ACCESSIBLE CAR PARKING SPACE 9' X 18' MARKED WITH INTERNATIONAL SYMBOL OF ACCESSIBILITY. ACCESSIBILITY SYMBOL TO BE PAINTED WITH CONTRACTOR GRADE ACRYLIC ON CONCRETE OR ASPHALT OR WOOD DECK SURFACE USING 70% CONTRAST COLOR OF BLUE WITH A SIZE OF 36" X 36". PARKING SPACE TO HAVE IDENTIFICATION SIGN MINIMUM 60" ABOVE FINISH FLOOR - REFER TO LANDSCAPE DRAWINGS.
120 ACCESS AISLE TO BE THE LENGTH OF ADJACENT PARKING SPACES, BE A MINIMUM OF 60" WIDE, AND SERVE A MAXIMUM OF (2) TWO SPACES. ACCESS AISLE TO BE PAINTED WITH A CONTRACTOR GRADE ACRYLIC ON CONCRETE OR ASPHALT OR WOOD DECK SURFACE USING 70% CONTRAST COLOR OF BLUE BORDER AND HATCHED LINES 36" O.C. MAX. PAINT TO BE CONTRACTOR GRADE ACRYLIC, ALKYD, OR CHLORINATED STRIPING PAINT. ACCESS AISLE TO BE MARKED WITH "NO PARKING", WHITE CONTRASTING LETTERING TO BACKGROUND AND A FONT SIZE OF 12 - REFER TO LANDSCAPE DRAWINGS.
121 PERPENDICULAR CURB RAMP WITH 70% CONTRAST COLOR OF YELLOW TRUNCATED DOMES PER CIVIL DRAWINGS, SEE DETAIL 3/A1.1.2 - REFER TO LANDSCAPE DRAWINGS.
130 TRASH ENCLOSURE UNDER SEPARATE PERMIT
142 SLIP RESISTANT SURFACE CONCRETE RAMP. REFER TO LANDSCAPE PLANS
143 CAST IN PLACE STAIRS WITH HANDRAIL. HANDRAIL 36" MAX HEIGHT. MINIMUM 1-1/2" DEEP SETTING HOLES TO SUPPORT MOUNTING ANCHORS. INSTALL PER MANUFACTURER'S RECOMMENDATIONS. REFER TO LANDSCAPE PLANS
151 48" MIN WIDTH ACCESSIBLE ROUTE . ANY ABRUPT LEVEL CHANGES WILL BE LESS THAN OR EQUAL TO 1/2". LEVEL CHANGE GREATER THAN 1/2" SHALL BE BEVELED AND COMPLY WITH RAMP REQUIREMENTS. LEVEL CHANGES LESS THAN OR EQUAL TO 1/4" MAY BE VERTICAL.
157 ACCESSIBLE ROUTE SIGN TO BE LOCATED AT EACH ACCESSIBLE ROUTE TO BUILDING ENTRANCE, AT EVERY MAJOR JUNCTION OR WHEREVER AHJ HAS DIRECTED TO COMPLY; SEE DETAIL 12/A1.1.2
166 FUTURE EV PARKING STALL
184 DRINKING FOUNTAIN PER LANDSCAPE PLANS; SEE DETAIL 13/A1.1.2
185 WOOD PLANK PAVING PER LANDSCAPE DRAWINGS
193 SLOPE WALK REFER TO LANDSCAPE DRAWINGS

SMS ARCHITECTS
100 Progress | Suite 250
Irvine, California 92618
949.757.3240 | www.sms-arch.com

CONSTANT

DANA POINT HARBOR PARTNERS

PROJECT NAME
DANA POINT HARBOR COMMERCIAL CORE
BUILDING 12
1290 HARBOR WAY
DANA POINT, CA 92629

CLIENT
BWP PROPERTIES
BURNHAM|WARD

LICENSED ARCHITECT
BRANDON DEDMON
No. C-37432
11.30.23
Exp. Date
STATE OF CALIFORNIA

No.	DATE	ISSUE
	9/30/2022	50% SCHEMATIC DESIGN
	10/28/2022	100% SCHEMATIC DESIGN
	02/10/2023	100% DESIGN DEVELOPMENT
	03/17/2023	50% CONSTRUCTION DOCUMENTS
A	04/21/2023	COUNTY RESUBMITTAL
B	10/09/2024	CITY PLANNING RESUBMITTAL

DRAWINGS AND WRITTEN MATERIAL APPEARING HEREIN CONSTITUTE ORIGINAL AND UNPUBLISHED WORK OF SMS ARCHITECTS AND MAY NOT BE DUPLICATED, USED OR DISCLOSED WITHOUT WRITTEN CONSENT OF THE ARCHITECT

PROJECT NO. 22039

DATE JANUARY 25, 2023

DRAWING TITLE
OVERALL SITE PLAN

DRAWING NO.
A1.0.1

10/8/2024 5:08:55 PM

CITY OF DANA POINT
PLANNING DIVISION

This plan has been reviewed for ZONING ONLY and meets the requirements of Title 9 of the Dana Point Municipal Code.

APPROVED KBN

DATE 10/21/24

COMMENTS BUILDING 12 (OC PERMIT PKG21-0516) PER CDP13-0018(I).

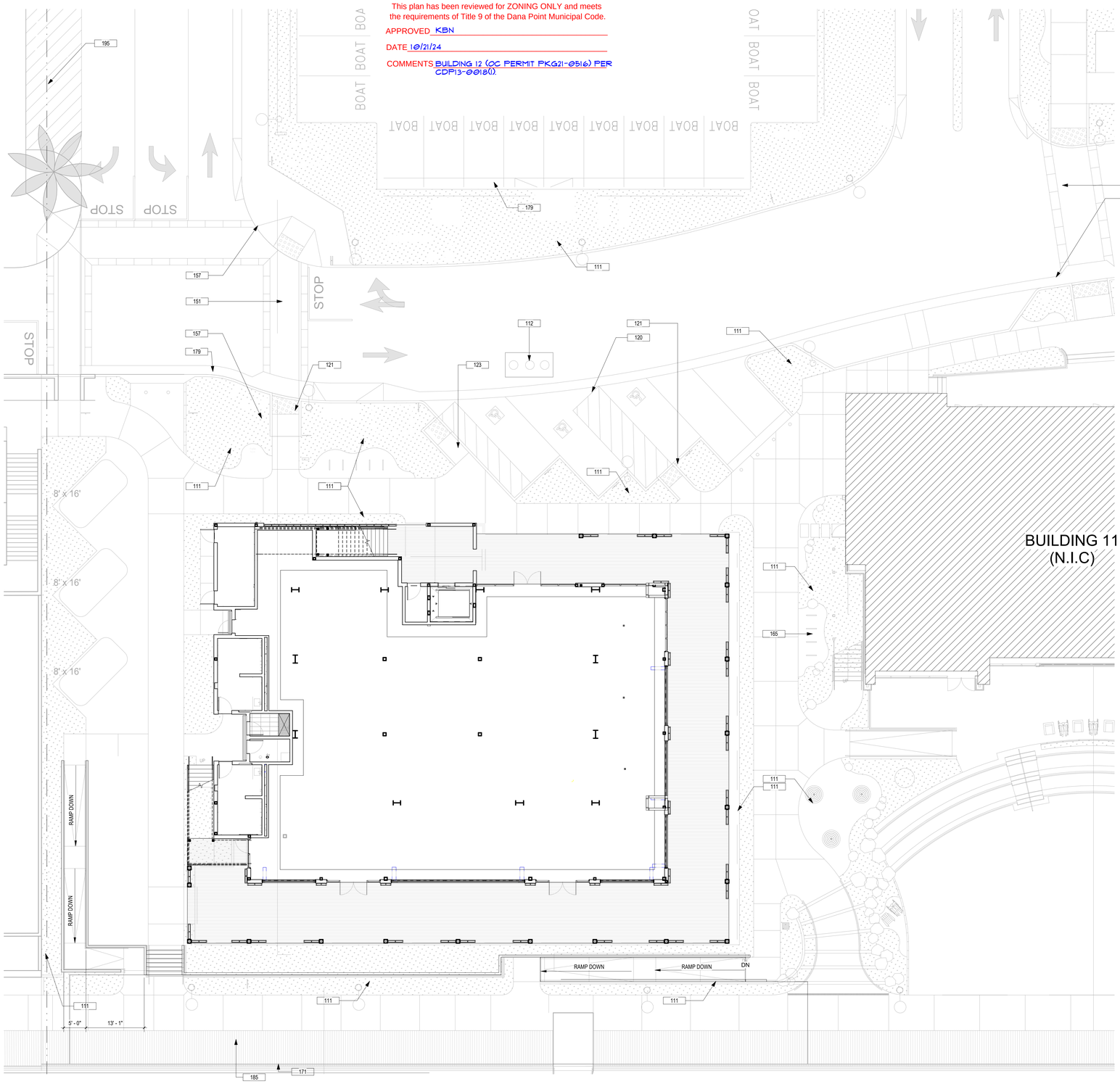

ENLARGED SITE PLAN
1" = 10'-0"

8 | A1.0.1 | A1.1.1

Zoning: CanningK 11/13/2024

Building&Safety: OCPWAzarvandB 12/22/2025

Permits: BNR21-0246, ELE21-0853, MEC21-0514, PLB21-0900

County of Orange - OC Public Works
OC Development Services
APPROVED

This set of plans and specifications must be kept on the job at all times. It is unlawful to make any changes or alterations to these plans without written permission from OC Public Works, OC Development Services of Orange County. The stamping of these plan specifications SHALL NOT be held to permit or be an approval of the violation of any provisions of any County Ordinance or State law.

Hani Tahsbsaee
BUILDING OFFICIAL

SITE PLAN GENERAL NOTES

01 NO REVISIONS SHALL BE MADE TO THESE PLANS WITHOUT THE APPROVAL OF THE ENGINEER ON RECORD.

02 ANY CONTRACTOR PERFORMING WORK AS INDICATED HEREON FOR THIS PROJECT SHALL FAMILIARIZE HIMSELF WITH THE SITE AND SHALL BE SOLELY RESPONSIBLE FOR ANY AND ALL DAMAGE TO THE EXISTING UTILITIES RESULTING DIRECTLY OR INDIRECTLY FROM HIS/HER OPERATIONS, WHETHER OR NOT SHOWN ON THESE PLANS.

03 THE CONTRACTOR SHALL DISPOSE OF ALL SURPLUS EARTH EXCAVATION OUTSIDE OF THE PROJECT AREA UNLESS APPROVED OTHERWISE BY THE ENGINEER OF RECORD. ALL ASPHALT, CONCRETE AND/OR PORTLAND CEMENT CONCRETE REMOVALS ARE TO BE DISPOSED OF OFF-SITE.

04 THE CONTRACTOR SHALL REVIEW AND VERIFY ALL CONDITIONS AND DIMENSIONS AT THE JOB SITE BEFORE COMMENCING ANY PORTION OF THE WORK; COMPARE ACTUAL CONDITIONS WITH DRAWINGS TO ASCERTAIN CONDITIONS UNDER WHICH WORK IS TO BE PERFORMED; CHECK AND CONFIRM LOCATION OF EXISTING STRUCTURES, EQUIPMENT, AND UTILITIES WHICH MAY AFFECT WORK. COMMENCEMENT OF WORK SHALL CONSTITUTE FULL ACCEPTANCE OF EXISTING SITE CONDITIONS. THE CONTRACTOR SHALL REPORT ALL DISCREPANCIES TO THE ENGINEER OF RECORD PRIOR TO COMMENCEMENT OF WORK.

05 THE CONTRACTOR SHALL ENACT ALL MEASURES TO PROTECT AND SAFEGUARD WORKERS AND THE GENERAL PUBLIC FROM INJURY DURING THE ENTIRE TIME OF CONSTRUCTION, MAINTAIN THE JOB SITE IN AN ORDERLY, CLEAN MANNER THROUGHOUT THE COURSE OF WORK AND NOT BLOCK LEGAL EXITS AND ENTRANCES. LEAVE WORK AREAS CLEAN, FREE OF DEBRIS AT END OF EACH DAY AND COMPLY WITH ALL APPLICABLE CODES.

06 ALL CONCRETE AND ASPHALT CONCRETE PAVEMENT TO BE REMOVED SHALL BE REMOVED UTILIZING A SAW CUT (MIN CUT DEPTH 1-1/2"), AND OR OTHER METHODS APPROVED BY ENGINEER OF RECORD.

07 THE CONTRACTOR SHALL ADJUST ALL UTILITY VALVE BOXES, MANHOLES, ETC. TO GRADE UPON COMPLETION OF PAVING. ASPHALTIC CONCRETE PAVEMENT SHALL ONLY BE USED TO PATCH AROUND RAISED UTILITIES IN ASPHALT STREETS.

08 THE CONTRACTOR SHALL REPLACE IN KIND, TO THE SATISFACTION OF THE OWNER, ANY PAVING, CURB AND GUTTER OR OTHER IMPROVEMENTS CUT, REMOVED, OR DAMAGED IN CONJUNCTION WITH THIS PROJECT.

09 CONTRACTOR AGREES THAT HE SHALL ASSUME SOLE AND COMPLETE RESPONSIBILITY FOR JOB SITE CONDITIONS DURING THE COURSE OF CONSTRUCTION OF THIS PROJECT, INCLUDING SAFETY OF ALL PERSONS AND PROPERTY. THIS REQUIREMENT SHALL APPLY CONTINUOUSLY AND NOT BE LIMITED TO NORMAL WORKING HOURS; AND THAT THE CONTRACTOR SHALL DEFEND, INDEMNIFY AND HOLD THE OWNER, THE ENGINEER OF RECORD AND THEIR REPRESENTATIVE, HARMLESS FROM ANY AND ALL LIABILITY, REAL OR ALLEGED, IN CONNECTION WITH THE PERFORMANCE OF WORK ON THIS PROJECT, EXCEPTING FOR LIABILITY ARISING FROM THE SOLE NEGLIGENCE OF THE OWNER OR THE ENGINEER OF RECORD.

10 CONTRACTOR SHALL PROVIDE FOR DUST CONTROL, TRAFFIC CONTROL AND RELATED CONSTRUCTION BEST MANAGEMENT PLAN AT ALL TIMES TO THE SATISFACTION OF THE OWNER AND THE CITY.

11 BARRICADES WITH FLASHING LIGHTS ARE TO BE MAINTAINED ON ALL OBSTRUCTUIONS WITHIN THE EXISTING STREET AT ALL TIMES. CONSTRUCTION WARNING SIGNS AND FLAGMEN ARE TO BE PRESENT AT THE JOB SITE.

12 THE CONTRACTOR SHALL NOTIFY UNDERGROUND SERVICE ALERT AT (1-800) 422-4133 TWO (2) DAYS PRIOR TO BEGINNING WORK. ALL UNDERGROUND UTILITIES AS SHOWN HEREON ON THE PLANS ARE BASED UPON REVIEW AVAILABLE RECORDS. IT IS THE SOLE RESPONSIBILITY OF THE CONTRACTOR TO "POT-HOLE" THE UTILITIES AS SHOWN HEREON IN ORDER TO PRECISELY LOCATE SAID UTILITES RELATIVE TO LINE AND GRADE PRIOR TO COMMENCEMENT OF WORK. ANY VARIATION OF THE UNDERGROUND UITILITY LOCATION IS TO BE BROUGHT TO THE ATTENTION OF THE ENGINEER OF RECORD PRIOR TO COMMENCEMENT OF CONSTRUCTION. COMMENCEMENT OF WORK SHALL CONSTITUTE FULL ACCEPTANCE AND RESPONSIBILITY OF ANY DAMAGE THAT MAY OCCUR TO ANY UNDERGROUND UTILITIES EITHER SHOWN OR NOT SHOWN ON THESE PLANS.

13 THE SANITARY SEWER, STORM DRAIN SYSTEM, WATER MAINS, GAS MAINS, AND ALL OTHER UNDERGROUND UTILITES SHALL BE PLACED UNDERGROUND PRIOR TO PAVING CONSTRUCTION.

SITE PLAN KEYNOTES

111 PLANTING PER LANDSCAPE PLANTING SCHEDULE. REFER TO LANDSCAPE DRAWINGS

112 GREASE INTERCEPTOR. REFER TO CIVIL DRAWINGS FOR LOCATIONS AND PLUMBING DRAWINGS FOR SIZE AND SPECIFICATIONS.

120 ACCESS AISLE TO BE THE LENGTH OF ADJACENT PARKING SPACES, BE A MINIMUM OF 60" WIDE, AND SERVE A MAXIMUM OF (2) TWO SPACES. ACCESS AISLE TO BE PAINTED WITH A CONTRACTOR GRADE ACRYLIC ON CONCRETE OR ASPHALT OR WOOD DECK SURFACE USING 70% CONTRAST COLOR OF BLUE BORDER AND HATCHED LINES 36" O.C. MAX. PAINT TO BE CONTRACTOR GRADE ACRYLIC, ALKYD, OR CHLORINATED STRIPING PAINT. ACCESS AISLE TO BE MARKED WITH "NO PARKING", WHITE CONTRASTING LETTERING TO BACKGROUND AND A FONT SIZE OF 12 - REFER TO LANDSCAPE DRAWINGS.

121 PERPENDICULAR CURB RAMP WITH 70% CONTRAST COLOR OF YELLOW TRUNCATED DOMES PER CIVIL DRAWINGS, SEE DETAIL 3/A1.1.2 - REFER TO LANDSCAPE DRAWINGS.

123 PARALLEL CURB RAMP WITH 70% CONTRAST COLOR OF YELLOW TRUNCATED TRUNCATED DOMES PER CIVIL DRAWINGS, SEE DETAIL 4/A1.1.2

151 48" MIN WIDTH ACCESSIBLE ROUTE. ,ANY ABRUPT LEVEL CHANGES WILL BE LESS THAN OR EQUAL TO 1/2". LEVEL CHANGE GREATER THAN 1/2" SHALL BE BEVELED AND COMPLY WITH RAMP REQUIREMENTS. LEVEL CHANGES LESS THAN OR EQUAL TO 1/4" MAY BE VERTICAL.

157 ACCESSIBLE ROUTE SIGN TO BE LOCATED AT EACH ACCESSIBLE ROUTE TO BUILDING ENTRANCE, AT EVERY MAJOR JUNCTION OR WHEREVER AHJ HAS DIRECTED TO COMPLY; SEE DETAIL 12/A1.1.2

165 BIKE RACKS / STORAGE PER LANDSCAPE DRAWINGS

171 (E) SEA WALL AND RAILING

179 LIGHT POLE LOCATION REFER TO LIGHTING AND CIVIL DRAWINGS FOR FURTHER INFORMATION

185 WOOD PLANK PAVING PER LANDSCAPE DRAWINGS

195 PROPERTY LINE

LEGEND

NEW PARTITION

ACCESSIBLE PATH OF TRAVEL

SMS ARCHITECTS
100 Progress | Suite 250
Irvine, California 92618
949.757.3240 | www.sms-arch.com

CONSTANT

DANA POINT HARBOR PARTNERS

PROJECT NAME
DANA POINT HARBOR COMMERCIAL CORE
BUILDING 12
1290 HARBOR WAY
DANA POINT, CA 92629

CLIENT
BURNHAM | WARD PROPERTIES
BWP

LICENSED ARCHITECT
BRANDON DEDMON
No. C-37432
11.30.23
Exp. Date
STATE OF CALIFORNIA

No.	DATE	ISSUE
	9/30/2022	50% SCHEMATIC DESIGN
	10/28/2022	100% SCHEMATIC DESIGN
	02/10/2023	100% DESIGN DEVELOPMENT
	03/17/2023	50% CONSTRUCTION DOCUMENTS
A	04/21/2023	COUNTY RESUBMITTAL
B	10/09/2024	CITY PLANNING RESUBMITTAL

DRAWINGS AND WRITTEN MATERIAL APPEARING HEREIN CONSTITUTE ORIGINAL AND UNPUBLISHED WORK OF SMS ARCHITECTS AND MAY NOT BE DUPLICATED, USED OR DISCLOSED WITHOUT WRITTEN CONSENT OF THE ARCHITECT

PROJECT NO. 22039

DATE JANUARY 25, 2023

DRAWING TITLE
ENLARGED SITE PLAN

DRAWING NO.
A1.1.1

C:\Users\Brandd\Documents\22039_DPH_Building 12-Arch_brandd@sms-arch.com.rvt

10/8/2024 5:09:01 PM

CITY OF DANA POINT
PLANNING DIVISION

This plan has been reviewed for ZONING ONLY and meets the requirements of Title 9 of the Dana Point Municipal Code.

APPROVED KBN

DATE 10/21/24

COMMENTS BUILDING 12 (OC PERMIT PKG21-0516) PER CDP13-0018(I).

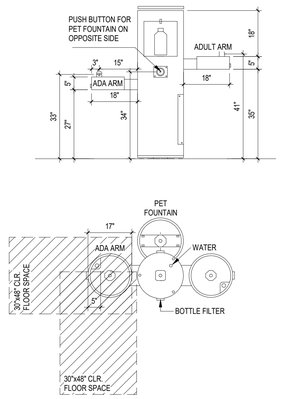

DRINKING FOUNTAIN 13 | A1.1.2
1/2" = 1'-0"

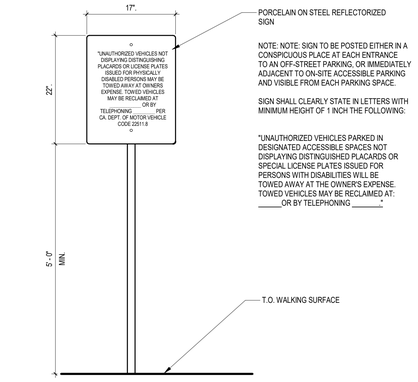

UNAUTHORIZED VEHICLE SIGN 9 | A1.1.2
3/4" = 1'-0"

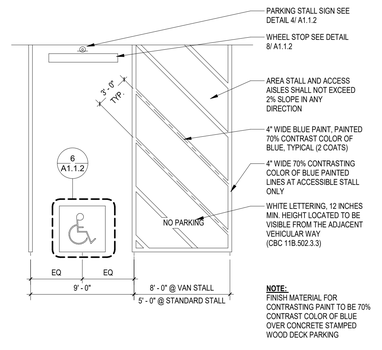

ACCESSIBILITY PARKING SPACE 5 | A1.1.2
3/16" = 1'-0"

Zoning: CanningK 11/13/2024

Building&Safety: OCPWAzarvandB 12/22/2025

Permits: BNR21-0246, ELE21-0853, MEC21-0514, PLB21-0900

County of Orange - OC Public Works
OC Development Services
APPROVED

This set of plans and specifications must be kept on the job at all times. It is unlawful to make any changes or alterations to these plans without written permission from OC Public Works, OC Development Services of Orange County. The stamping of these plan specifications SHALL NOT be held to permit or be an approval of the violation of any provisions of any County Ordinance or State law.

Hind Tahtabaee
BUILDING OFFICIAL

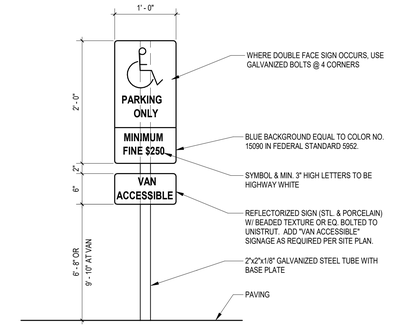

PARKING SPACE INDENTIFICATION SIGN 10 | A1.1.2
1" = 1'-0"

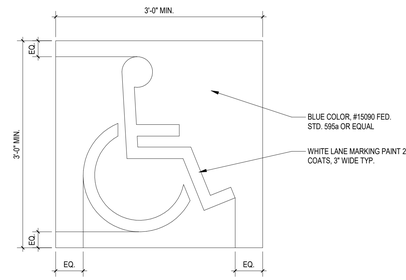

INTERNATIONAL SYMBOL OF ACCESSIBILITY 6 | A1.1.2 | A1.1.2
3/4" = 1'-0"

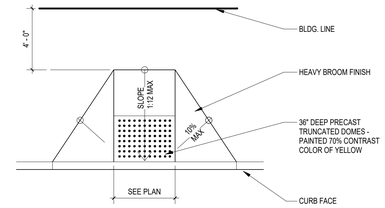

FLARED CURB RAMP 2 | A1.1.2
1/4" = 1'-0"

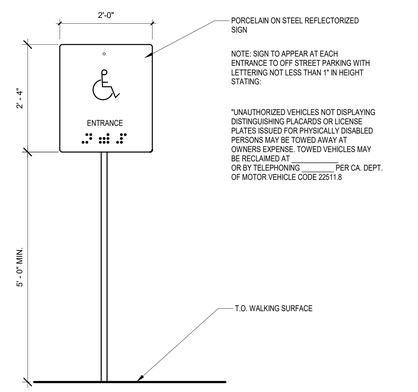

ACCESSIBLE ENTRY SIGN 11 | A1.1.2
3/4" = 1'-0"

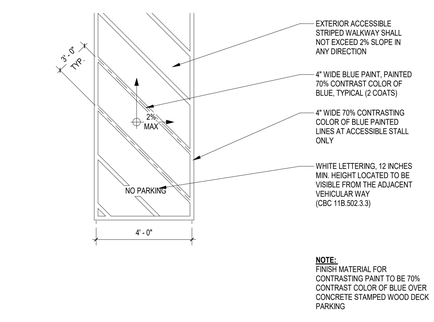

EXTERIOR ACCESSIBLE STRIPED WALKWAY 7 | A1.1.2
3/16" = 1'-0"

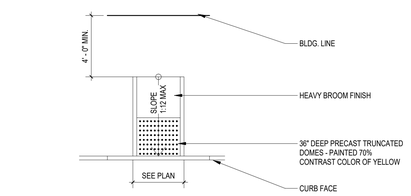

PERPENDICULAR CURB RAMP 3 | A1.1.2
1/4" = 1'-0"

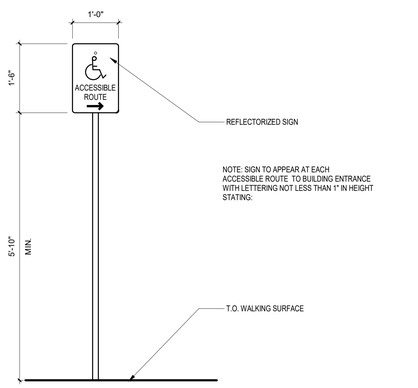

ACCESSIBLE ROUTE SIGN 12 | A1.1.2
3/4" = 1'-0"

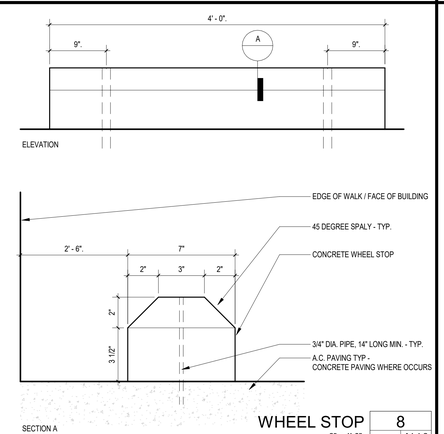

WHEEL STOP 8 | A1.1.2
3" = 1'-0"

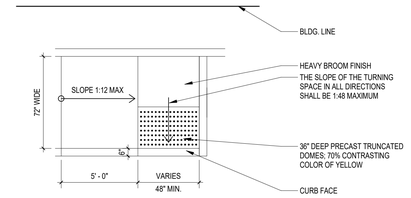

PARALLEL CURB RAMP 4 | A1.1.2
1/4" = 1'-0"

SMS ARCHITECTS
100 Progress | Suite 250
Irvine, California 92618
949.757.3240 | www.sms-arch.com

CONSTANT

DANA POINT HARBOR PARTNERS

PROJECT NAME
DANA POINT HARBOR COMMERCIAL CORE
BUILDING 12
1290 HARBOR WAY
DANA POINT, CA 92629

CLIENT
BWP BURNHAM | WARD PROPERTIES

No.	DATE	ISSUE
	9/30/2022	50% SCHEMATIC DESIGN
	10/28/2022	100% SCHEMATIC DESIGN
	02/10/2023	100% DESIGN DEVELOPMENT
	03/17/2023	50% CONSTRUCTION DOCUMENTS
A	04/21/2023	COUNTY RESUBMITTAL
B	10/09/2024	CITY PLANNING RESUBMITTAL

DRAWINGS AND WRITTEN MATERIAL APPEARING HEREIN CONSTITUTE ORIGINAL AND UNPUBLISHED WORK OF SMS ARCHITECTS AND MAY NOT BE DUPLICATED, USED OR DISCLOSED WITHOUT WRITTEN CONSENT OF THE ARCHITECT

PROJECT NO 22039

DATE JANUARY 25, 2023

DRAWING TITLE
SITE DETAILS

DRAWING NO.
A1.1.2

C:\Users\Barrett\Documents\22039_DPH_Building 12-Arch_brandt@sms-arch.com.rvt

10/8/2024 5:09:04 PM

CITY OF DANA POINT
PLANNING DIVISION

This plan has been reviewed for ZONING ONLY and meets the requirements of Title 9 of the Dana Point Municipal Code.

APPROVED KBN

DATE 10/21/24

COMMENTS BUILDING 12 (OC PERMIT PKG21-0516) PER CDP13-0018(I).

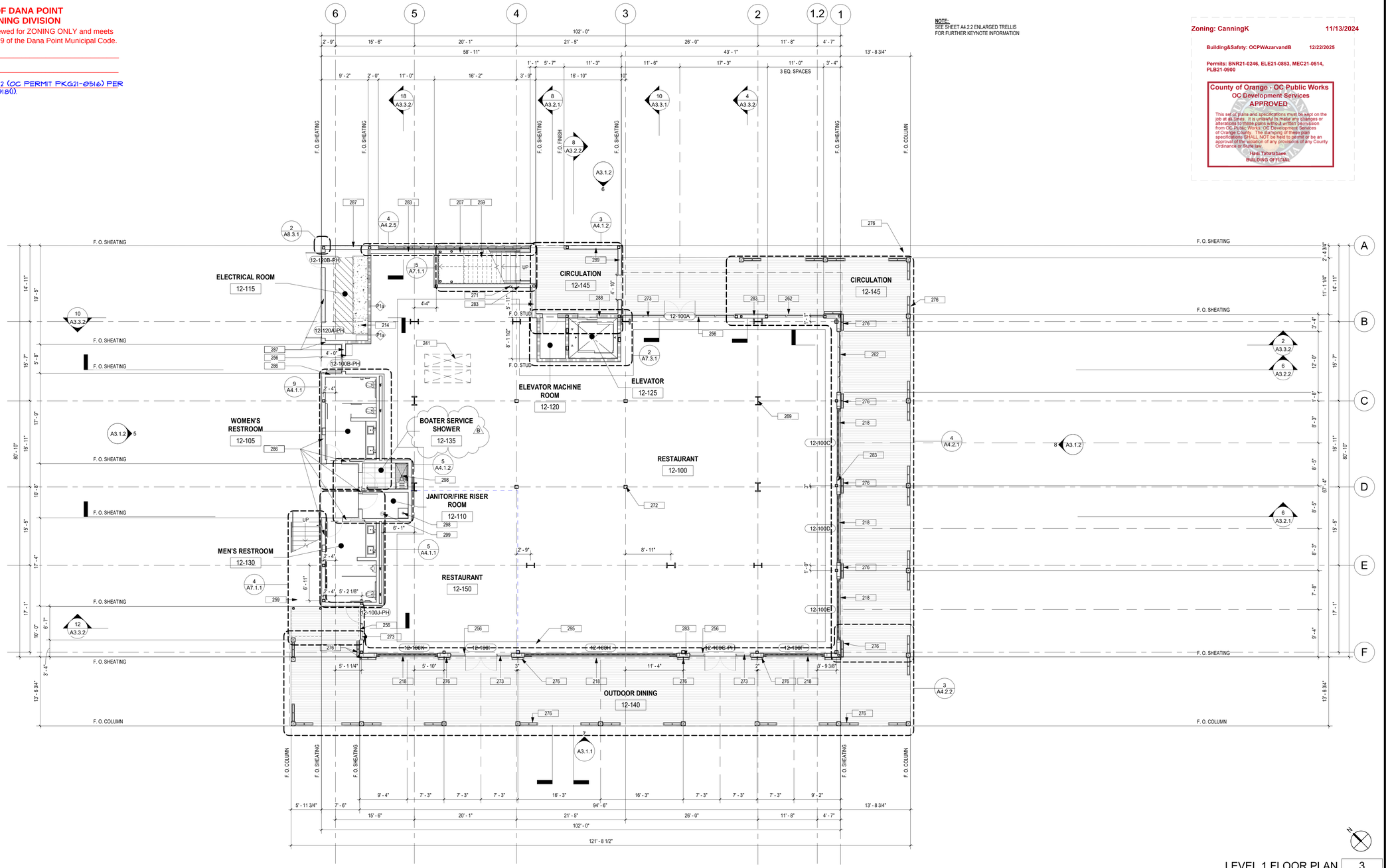

NOTE:
SEE SHEET A4.2.2 ENLARGED TRELLIS FOR FURTHER KEYNOTE INFORMATION

Zoning: CanningK 11/13/2024

Building&Safety: OCPWAzarvandB 12/22/2025

Permits: BNR21-0246, ELE21-0853, MEC21-0514, PLB21-0900

County of Orange - OC Public Works
OC Development Services
APPROVED

This set of plans and specifications must be kept on the job at all times. It is unlawful to make any changes or alterations to these plans without written permission from OC Public Works, OC Development Services of Orange County. The stamping of these plan specifications SHALL NOT be held to permit or be an approval of the violation of any provisions of any County Ordinance or State law.

Hani Tahtabawi
BUILDING OFFICIAL

LEVEL 1 FLOOR PLAN 3
1/8" = 1'-0" A3.1.1 A2.0.1

FLOOR PLAN LEGEND

Room name

101	ROOM REFERENCE	SEE SHEET A10.1.1 FOR ROOM FINISH SCHEDULE
(101)	DOOR REFERENCE	SEE SHEET A10.1.1 FOR DOOR SCHEDULE
1 / A101	VIEW REFERENCE	
◇1	PARTITION TYPE	SEE SHEET A9.1.1 FOR PARTITION SCHEDULE
	NEW PARTITION	
	NEW 1-HR FIRE RATED WALL	

FLOOR PLAN KEYNOTES

207 5" HORIZONTAL SHIPLAP SIDING (1/8" GAP) - RUNNING BOND O/WEATHER BARRIER O/PLYWOOD SHEATHING O/METAL STUDS
214 4" HOUSEKEEPING SLAB. EXTEND 2' PAST EDGE OF EQUIPMENT
218 WOOD FRAME BI-FOLDING DOOR SYSTEM TO MATCH DURATHERM WITH LOW-E INSULATED GLAZING. REFERENCE SHEET A10.1.1 FOR DOOR SCHEDULE SIZING. PROVIDE TEMPERED GLASS WHEN BOTTOM EDGE OF GLAZING IS BELOW 18", HAS 9 SQUARE FEET OR GREATER AREA, IS WITHIN 60" ABOVE A WALKING PATH VERTICALLY, AND IS WITHIN 36" OF WALKING PATH HORIZONTALLY - TYP.
241 DASHED LINE INDICATES SHAFT ABOVE FOR FUTURE TENANT USE
256 PROVIDE TACTILE EXIT SIGN TO EXIT. SEE DETAIL 6/A9.9.1
259 PRECAST CONCRETE STAIR TREADS AND RISER INSTALLED ON STEEL STRINGERS. PRECAST TREADS TO PROVIDE CAST IN THREADED INSERT FOR BOLTING OR AN EMBEDDED BOTTOM WELD PLATE FOR WELDING. SEE A7.1.1 FOR TYPICAL PLAN.
262 WOOD STOREFRONT ASSEMBLY SYSTEM TO MATCH DURATHERM OR EQ. VERTICAL MULLIONS @ 36" O.C. TYP. WITH LOW-E INSULATED GLAZING. PROVIDE TEMPERED GLASS WHEN BOTTOM EDGE OF GLAZING IS BELOW 18", HAS 9 SQUARE FEET OR GREATER AREA, IS WITHIN 60" ABOVE A WALKING PATH VERTICALLY, AND IS WITHIN 36" OF WALKING PATH HORIZONTALLY - TYP.
269 W FLANGE COLUMN PER STRUCTURAL DRAWINGS. SPRAY-APPLIED FIREPROOFING ON ALL PRIMARY STRUCTURAL MEMBERS - TYP.
271 STORM DRAIN PIPE LOCATED WITHIN WALL PER PLUMBING DRAWINGS.
272 HSS COLUMN REFER TO STRUCTURAL DRAWINGS FOR FURTHER INFORMATION -TYP.
273 WOOD STOREFRONT DOOR ASSEMBLY TO MATCH DURATHERM OR EQ. WITH LOW-E INSULATED GLAZING. REFERENCE SHEET A10.1.1 FOR DOOR SCHEDULE SIZING. PROVIDE TEMPERED GLASS WHEN BOTTOM EDGE OF GLAZING IS BELOW 18", HAS 9 SQUARE FEET OR GREATER AREA, IS WITHIN 60" ABOVE A WALKING PATH VERTICALLY, AND IS WITHIN 36" OF WALKING PATH HORIZONTALLY - TYP.
276 OPEN DECORATIVE HORIZONTAL SLAT WOOD SCREEN SYSTEM - TYP.
283 5" HORIZONTAL SHIPLAP SIDING (1/8" GAP) - RUNNING BOND O/WEATHER BARRIER O/PLYWOOD SHEATHING BONDED TO CONTINUOUS R-10 RIGID INSULATION O/METAL STUDS W/R-19 BATT INSULATION
286 8" HORIZONTAL WOOD T&G (1/4" FINE LINE) SIDING - RUNNING BOND O/ WEATHER BARRIER O/ PLYWOOD SHEATHING BONDED TO CONTINUOUS R-10 RIGID INSULATION O/ METAL STUDS W/ R-19 BATT INSULATION O/ CEMENT TILE BACKER O/ TILE
287 8" HORIZONTAL WOOD T&G (1/4" FINE LINE) SIDING - RUNNING BOND O/ WEATHER BARRIER O/ PLYWOOD SHEATHING BONDED TO CONTINUOUS R-10 RIGID INSULATION O/ METAL STUDS W/ R-19 BATT INSULATION
288 5" HORIZONTAL SHIPLAP SIDING (1/8" GAP) - RUNNING BOND O/ WEATHER BARRIER O/ PLYWOOD SHEATHING BONDED TO CONTINUOUS R-10 RIGID INSULATION O/ METAL STUDS W/R-19 BATT INSULATION O/ 1" CORE BOARD
289 8" HORIZONTAL WOOD T&G (1/4" FINE LINE) SIDING - RUNNING BOND O/ WEATHER BARRIER O/ PLYWOOD SHEATHING O/ METAL STUDS O/ PLYWOOD SHEATING O/ WEATHER BARRIER O/ 5" HORIZONTAL SHIPLAP (1/8" GAP) - RUNNING BOND
295 CONCRETE SLAB. REFER TO SLAB PLAN SHEET A2.0.1a FOR FURTHER INFORMATION
298 DRAINS REFER TO PLUMBING DRAWINGS FOR FURTHER INFORMATION
299 FIRE RISER REFER TO FIRE PROTECTION DRAWINGS FOR FURTHER INFORMATION

FLOOR PLAN GENERAL NOTES

01 REFER TO STRUCTURAL PLANS FOR FURTHER INFORMATION
02 REFER TO ELECTRICAL PLANS FOR FURTHER INFORMATION
03 REFER TO MECHANICAL PLANS FOR FURTHER INFORMATION
04 REFER TO PLUMBING PLANS FOR FURTHER INFORMATION
06 REFER TO FINISH PLAN AND SCHEDULE FOR INTERIOR WALL, CEILING AND FLOOR FINISH INFORMATION
07 DIMENSIONS ARE TO FACE OF FRAMING UNLESS SPECIFICALLY NOTED OTHERWISE
08 PROVIDE ADEQUATE BLOCKING IN WALLS FOR CABINETS AND OTHER WALL MOUNTED ACCESSORIES, INCLUDING BUT NOT LIMITED TO, HANDRAILS, SHELVING, AND BATHROOM FIXTURES
09 PROVIDE FIRE BLOCKING FOR WALL CAVITIES THAT EXCEED CBC HEIGHT LIMITATION
10 ALL CORRIDORS SHALL MAINTAIN A MINIMUM 44" CLEAR WIDTH THROUGHOUT THE TENANT SPACE AND ALL BUILDING EXITS, WHEN SERVING 50 OR MORE PERSONS
11 THE MAXIMUM OCCUPANCY LOAD SHALL BE POSTED IN EACH ASSEMBLY, DINING, AND/OR WAITING AREAS AS STATED ON PLANS.
12 PROVIDE FIRE EXTINGUISHERS (2-A-10-B.C.) THROUGHOUT. MINIMUM ONE (1) PER FLOOR, PER BUILDING WITH A MAXIMUM TRAVEL OF 75 FEET FROM ANY POINT TO A FIRE EXTINGUISHER
13 CONTRACTOR TO VERIFY ALL FIELD CONDITIONS PRIOR TO COMMENCEMENT OF WORK. ANY DISCREPANCIES IN THE FIELD AND DRAWINGS SHALL BE BROUGHT TO THE ATTENTION OF THE ARCHITECT OR OWNER PRIOR TO START OF WORK. ALL DIMENSIONS FROM EXISTING ELEMENTS ON THE DRAWINGS ARE APPROXIMATE AND SHALL BE VERIFIED IN THE FIELD
14 ALL DOOR OPENINGS ADJACENT TO A WALL SHALL RECEIVE A 4" OFFSET FROM THE ADJACENT WALL, UNLESS NOTED OTHERWISE
15 CONTRACTOR TO PROVIDE SMOOTH TRANSITION BETWEEN NEW AND EXISTING CONSTRUCTION. WHERE NEW CONSTRUCTION OCCURS, EXISTING SYSTEMS SHALL BE PROTECTED IN PLACE, EXTENDED AND FINISHED TO CREATE A COMPLETE SYSTEM AND SMOOTH TRANSITION TO NEW CONSTRUCTION
16 ALL NEW ROOF ASSEMBLIES TO BE CLASS "A"
17 REFER TO WALL TYPE SCHEDULES FOR FURTHER INFORMATION, SEE SHEET A9.1.1
18 PENETRATIONS OF FIRE-RESISTIVE WALLS, FLOOR-CEILING AND ROOF-CEILING SHALL BE PROTECTED AS REQUIRED IN CBC SECTION 714
19 STRUCTURAL ELEMENTS EXPOSED WITHIN WALLS, ARE REQUIRED TO HAVE THE SAME FIRE RESISTIVITY AS THE WALL AND FLOOR ASSEMBLIES
21 SIGNAGE REQUIREMENTS SHALL SATISFY SECTION. CBC 11B-216 AND CBC 11B-703.
22 IN BUILDINGS REQUIRED TO HAVE STANDPIPES, NOT LESS THAN ONE STANDPIPE SHALL BE PROVIDED FOR USE DURING CONSTRUCTION. STANDPIPES SHALL BE REVIEWED AND APPROVED PRIOR TO INSTALLATION
23 ALL FURNITURE AND EQUIPMENT IS BY OWNER AND IS SHOWN FOR COORDINATION PURPOSES ONLY.
24 PROVIDE ROOM IDENTIFICATION SIGN ON WALL ADJACENT TO ALL DOORS. REFER TO DETAIL 6/A9.9.1
25 FUTURE TENANT SPACES ARE DESIGNED FOR SHELL ONLY, NOT OCCUPANCY.
26 ALL EXTERIOR WOOD FINISHES SHALL BE LESS THAN TO BE 1" NOMINAL THICKNESS TO COMPLY WITH CBC 1404.5
27 FIRE-RETARDANT-TREATED WOOD MUST BE USED WHENEVER WOOD IS DETAILED, INCLUDING FRAMING AND PLYWOOD SHEATHING, TO COMPLY WITH CBC 603.1
28 ALL ELEMENTS OF THE BUILDING SHALL COMPLY WITH SECTION 602.2 AND 603 OF THE 2019 CBC FOR ALLOWABLE CONSTRUCTION MATERIALS.
29 ALL LIGHTING IS TO BE DESIGNED AND LOCATED SO THAT LIGHT RAYS ARE AIMED DOWNWARD ONTO THE SITE THAT IS ATTACHED TO THE WATER-FACING ELEVATION OF THE BUILDING PER SECTION 5.5.P OF THE DANA POINT HARBOR DISTRICT REGULATION. B

SMS ARCHITECTS
100 Progress | Suite 250
Irvine, California 92618
949.757.3240 | www.sms-arch.com

CONSTANT

DANA POINT HARBOR PARTNERS

PROJECT NAME
DANA POINT HARBOR COMMERCIAL CORE
BUILDING 12
1290 HARBOR WAY
DANA POINT, CA 92629

CLIENT
BWP PROPERTIES
BURNHAM|WARD

No.	DATE	ISSUE
	9/30/2022	50% SCHEMATIC DESIGN
	10/28/2022	100% SCHEMATIC DESIGN
	02/10/2023	100% DESIGN DEVELOPMENT
	03/17/2023	50% CONSTRUCTION DOCUMENTS
A	04/21/2023	COUNTY RESUBMITTAL
B	10/09/2024	CITY PLANNING RESUBMITTAL

DRAWINGS AND WRITTEN MATERIAL APPEARING HEREIN CONSTITUTE ORIGINAL AND UNPUBLISHED WORK OF SMS ARCHITECTS AND MAY NOT BE DUPLICATED, USED OR DISCLOSED WITHOUT WRITTEN CONSENT OF THE ARCHITECT

PROJECT NO. 22039
DATE JANUARY 25, 2023
DRAWING TITLE
LEVEL 1 FLOOR PLAN
DRAWING NO.
A2.0.1

C:\Users\Brandi\Documents\22039_DPH_Building 12-Arch_brandi@sms-arch.com.rvt

10/8/2024 5:09:10 PM

CITY OF DANA POINT
PLANNING DIVISION

This plan has been reviewed for ZONING ONLY and meets the requirements of Title 9 of the Dana Point Municipal Code.

APPROVED KBN

DATE 10/21/24

COMMENTS BUILDING 12 (OC PERMIT PKG21-0516) PER CDP13-0018(I).

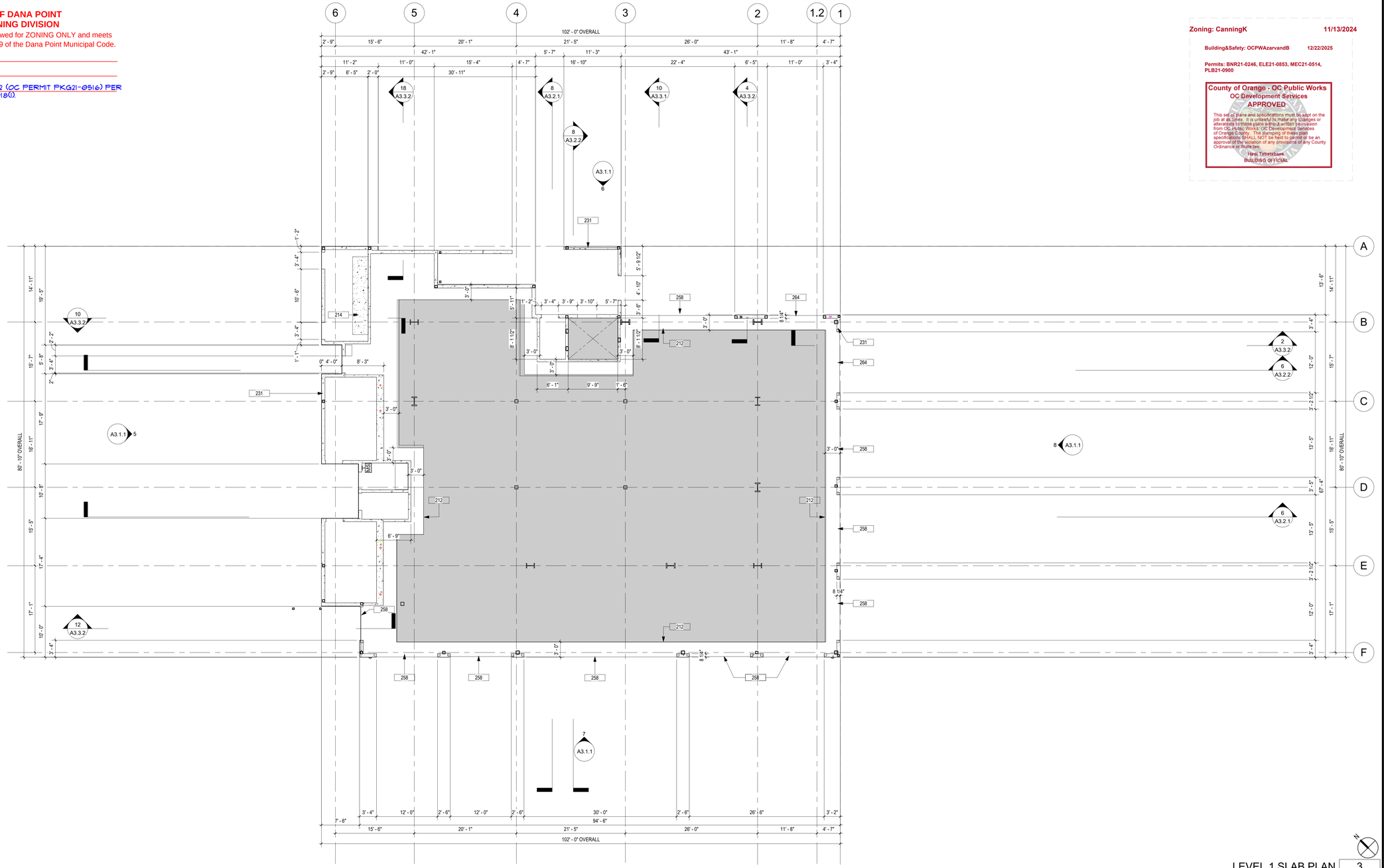

LEVEL 1 SLAB PLAN
1/8" = 1'-0"

3
A3.1.1 A2.0.1a

SLAB PLAN LEGEND

CONCRETE

FUTURE CONCRETE SLAB PER TENANT

SLAB PLAN KEYNOTES

212 CONCRETE SLAB ON GRADE O/ SAND O/ VAPOR BARRIER
214 4" HOUSEKEEPING SLAB. EXTEND 2" PAST EDGE OF EQUIPMENT
231 6" CONCRETE CURB AT BASE OF ALL EXTERIOR WALLS
258 REFER TO FLOOR PLAN FOR DOOR LOCATION
264 REFER TO FLOOR PLAN FOR WINDOW WALL LOCATION
299 FIRE RISER REFER TO FIRE PROTECTION DRAWINGS FOR FURTHER INFORMATION

SLAB PLAN GENERAL NOTES

01 REFER TO STRUCTURAL PLANS FOR FURTHER INFORMATION
02 REFER TO ELECTRICAL PLANS FOR FURTHER INFORMATION
03 REFER TO MECHANICAL PLANS FOR FURTHER INFORMATION
04 REFER TO PLUMBING PLANS FOR FURTHER INFORMATION
06 REFER TO FINISH PLAN AND SCHEDULE FOR INTERIOR WALL, CEILING AND FLOOR FINISH INFORMATION
07 DIMENSIONS ARE TO FACE OF FRAMING UNLESS SPECIFICALLY NOTED OTHERWISE
08 PROVIDE ADEQUATE BLOCKING IN WALLS FOR CABINETS AND OTHER WALL MOUNTED ACCESSORIES, INCLUDING BUT NOT LIMITED TO, HANDRAILS, SHELVING, AND BATHROOM FIXTURES
09 PROVIDE FIRE BLOCKING FOR WALL CAVITIES THAT EXCEED CBC HEIGHT LIMITATION
10 ALL CORRIDORS SHALL MAINTAIN A MINIMUM 44" CLEAR WIDTH THROUGHOUT THE TENANT SPACE AND ALL BUILDING EXITS, WHEN SERVING 50 OR MORE PERSONS
11 THE MAXIMUM OCCUPANCY LOAD SHALL BE POSTED IN EACH ASSEMBLY, DINING, AND/OR WAITING AREAS AS STATED ON PLANS.
12 PROVIDE FIRE EXTINGUISHERS (2-A-10-B-C.) THROUGHOUT. MINIMUM ONE (1) PER FLOOR, PER BUILDING WITH A MAXIMUM TRAVEL OF 75 FEET FROM ANY POINT TO A FIRE EXTINGUISHER
13 CONTRACTOR TO VERIFY ALL FIELD CONDITIONS PRIOR TO COMMENCEMENT OF WORK. ANY DISCREPANCIES IN THE FIELD AND DRAWINGS SHALL BE BROUGHT TO THE ATTENTION OF THE ARCHITECT OR OWNER PRIOR TO START OF WORK. ALL DIMENSIONS FROM EXISTING ELEMENTS ON THE DRAWINGS ARE APPROXIMATE AND SHALL BE VERIFIED IN THE FIELD
14 ALL DOOR OPENINGS ADJACENT TO A WALL SHALL RECEIVE A 4" OFFSET FROM THE ADJACENT WALL, UNLESS NOTED OTHERWISE
15 CONTRACTOR TO PROVIDE SMOOTH TRANSITION BETWEEN NEW AND EXISTING CONSTRUCTION. WHERE NEW CONSTRUCTION OCCURS, EXISTING SYSTEMS SHALL BE PROTECTED IN PLACE, EXTENDED AND FINISHED TO CREATE A COMPLETE SYSTEM AND SMOOTH TRANSITION TO NEW CONSTRUCTION
16 ALL NEW ROOF ASSEMBLIES TO BE CLASS "A"
17 REFER TO WALL TYPE SCHEDULES FOR FURTHER INFORMATION, SEE SHEET A9.1.1
18 PENETRATIONS OF FIRE-RESISTIVE WALLS, FLOOR-CEILING AND ROOF-CEILING SHALL BE PROTECTED AS REQUIRED IN CBC SECTION 714
19 STRUCTURAL ELEMENTS EXPOSED WITHIN WALLS, ARE REQUIRED TO HAVE THE SAME FIRE RESISTIVITY AS THE WALL AND FLOOR ASSEMBLIES
21 SIGNAGE REQUIREMENTS SHALL SATISFY SECTION. CBC 11B-216 AND CBC 11B-703.
22 IN BUILDINGS REQUIRED TO HAVE STANDPIPES, NOT LESS THAN ONE STANDPIPE SHALL BE PROVIDED FOR USE DURING CONSTRUCTION. STANDPIPES SHALL BE REVIEWED AND APPROVED PRIOR TO INSTALLATION
23 ALL FURNITURE AND EQUIPMENT IS BY OWNER AND IS SHOWN FOR COORDINATION PURPOSES ONLY.
24 PROVIDE ROOM IDENTIFICATION SIGN ON WALL ADJACENT TO ALL DOORS. REFER TO DETAIL 6/A9.9.1
25 FUTURE TENANT SPACES ARE DESIGNED FOR SHELL ONLY, NOT OCCUPANCY.
26 ALL EXTERIOR WOOD FINISHES SHALL BE LESS THAN TO BE 1" NOMINAL THICKNESS TO COMPLY WITH CBC 1404.5
27 FIRE-RETARDANT-TREATED WOOD MUST BE USED WHENEVER WOOD IS DETAILED, INCLUDING FRAMING AND PLYWOOD SHEATHING, TO COMPLY WITH CBC 603.1
28 ALL ELEMENTS OF THE BUILDING SHALL COMPLY WITH SECTION 602.2 AND 603 OF THE 2019 CBC FOR ALLOWABLE CONSTRUCTION MATERIALS.
29 ALL LIGHTING IS TO BE DESIGNED AND LOCATED SO THAT LIGHT RAYS ARE AIMED DOWNWARD ONTO THE SITE THAT IS ATTACHED TO THE WATER-FACING ELEVATION OF THE BUILDING PER SECTION 5.5 P OF THE DANA POINT HARBOR DISTRICT REGULATION.

Zoning: CanningK 11/13/2024

Building&Safety: OCPWAzarvandB 12/22/2025

Permits: BNR21-0246, ELE21-0853, MEC21-0514, PLB21-0900

County of Orange - OC Public Works
OC Development Services
APPROVED

This set of plans and specifications must be kept on the job at all times. It is unlawful to make any changes or alterations to these plans without written permission from OC Public Works, OC Development Services of Orange County. The stamping of these plan specifications SHALL NOT be held to permit or be an approval of the violation of any provisions of any County Ordinance or State law.

Hani Tahsbsaee
BUILDING OFFICIAL

SMS ARCHITECTS
100 Progress | Suite 250
Irvine, California 92618
949.757.3240 | www.sms-arch.com

CONSTANT

DANA POINT HARBOR PARTNERS

PROJECT NAME
DANA POINT HARBOR COMMERCIAL CORE
BUILDING 12
1290 HARBOR WAY
DANA POINT, CA 92629

CLIENT
BURNHAM | WARD PROPERTIES
B|W|P

No.	DATE	ISSUE
	9/30/2022	50% SCHEMATIC DESIGN
	10/28/2022	100% SCHEMATIC DESIGN
	03/17/2023	50% CONSTRUCTION DOCUMENTS
A	04/21/2023	COUNTY RESUBMITTAL
B	10/09/2024	CITY PLANNING RESUBMITTAL

DRAWINGS AND WRITTEN MATERIAL APPEARING HEREIN CONSTITUTE ORIGINAL AND UNPUBLISHED WORK OF SMS ARCHITECTS AND MAY NOT BE DUPLICATED, USED OR DISCLOSED WITHOUT WRITTEN CONSENT OF THE ARCHITECT

PROJECT NO. 22039

DATE JANUARY 25, 2023

DRAWING TITLE
LEVEL 1 SLAB PLAN

DRAWING NO.
A2.0.1a

C:\Users\Brandi\Documents\22039_BPH_Building 12-Arch_brandi@sms-arch.com.rvt

10/8/2024 5:09:13 PM

CITY OF DANA POINT
PLANNING DIVISION

This plan has been reviewed for ZONING ONLY and meets the requirements of Title 9 of the Dana Point Municipal Code.

APPROVED KBN

DATE 10/21/24

COMMENTS BUILDING 12 (OC PERMIT PKG21-0516) PER CDP13-0018(I).

Zoning: CanningK 11/13/2024

Building&Safety: OCPWAzarvandB 12/22/2025

Permits: BNR21-0246, ELE21-0853, MEC21-0514, PLB21-0900

County of Orange - OC Public Works
OC Development Services
APPROVED

This set of plans and specifications must be kept on the job at all times. It is unlawful to make any changes or alterations to these plans without written permission from OC Public Works, OC Development Services of Orange County. The stamping of these plan specifications SHALL NOT be held to permit or be an approval of the violation of any provisions of any County Ordinance or State law.

Hani Tahsbsaee
BUILDING OFFICIAL

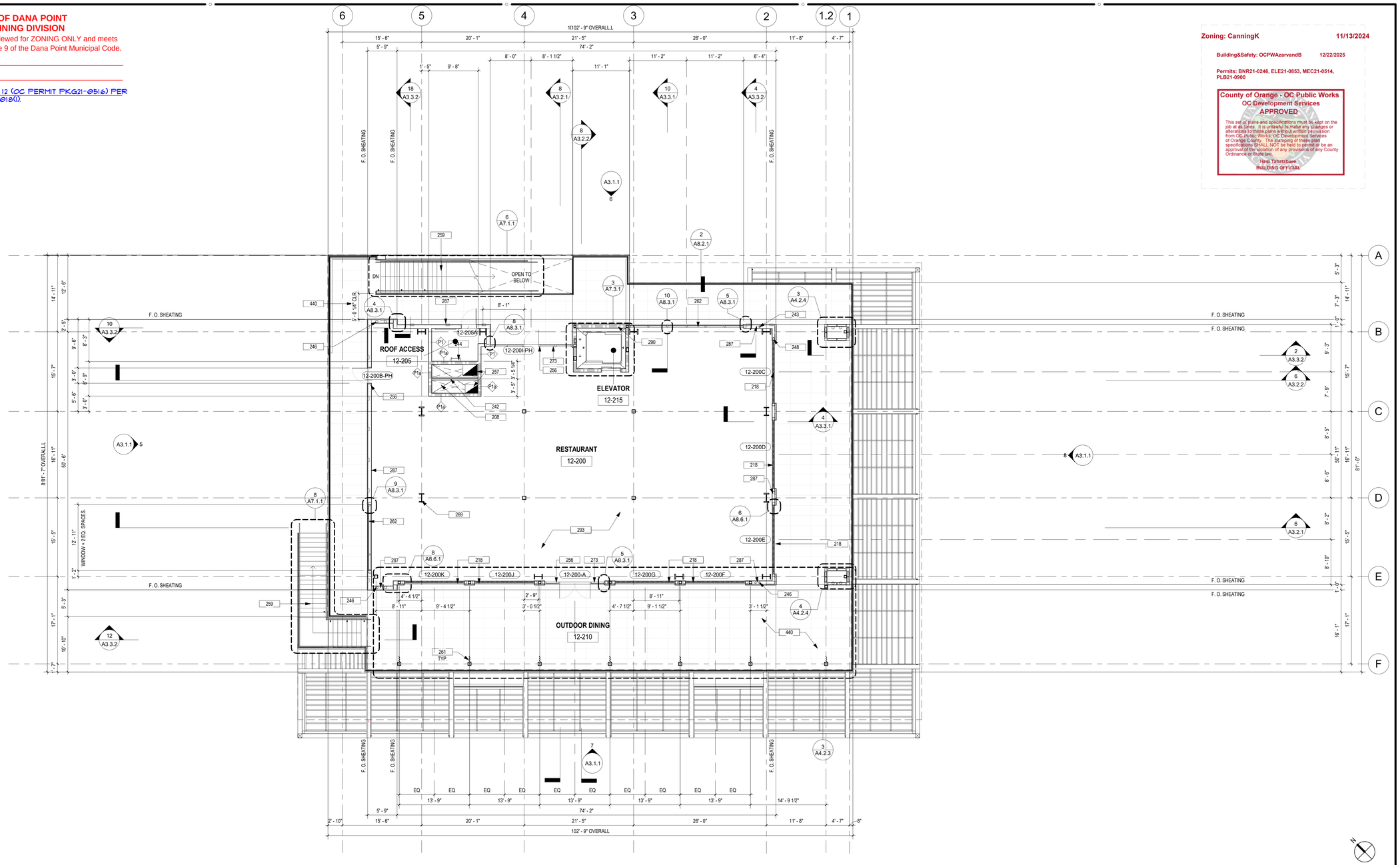

LEVEL 2 FLOOR PLAN 3
1/8" = 1'-0" A3.1.1 A2.0.2

FLOOR PLAN LEGEND

Room name

101	ROOM REFERENCE	SEE SHEET A10.1.1 FOR ROOM FINISH SCHEDULE
(101)	DOOR REFERENCE	SEE SHEET A10.1.1 FOR DOOR SCHEDULE
1 / A101	VIEW REFERENCE	
1	PARTITION TYPE	SEE SHEET A9.1.1 FOR PARTITION SCHEDULE
	NEW PARTITION	

FLOOR PLAN KEYNOTES

208 SHAFT FOR FUTURE 1ST FLOOR TENANT. ALL SHELL DUCTWORK IS TO BE ROUTED TO MAINTAIN CLEAR SPACE FOR FUTURE TENANT
218 WOOD FRAME BI-FOLDING DOOR SYSTEM TO MATCH DURATHERM WITH LOW-E INSULATED GLAZING. REFERENCE SHEET A10.1.1 FOR DOOR SCHEDULE SIZING. PROVIDE TEMPERED GLASS WHEN BOTTOM EDGE OF GLAZING IS BELOW 18", HAS 9 SQUARE FEET OR GREATER AREA, IS WITHIN 60" ABOVE A WALKING PATH VERTICALLY, AND IS WITHIN 36" OF WALKING PATH HORIZONTALLY - TYP.
242 STEEL BEAM PER STRUCTURAL DRAWINGS
243 OVERFLOW. DAYLIGHT 12" A.F.F. SEE DETAIL 6/ A8.4.1
244 WALL MOUNTED ROOF LADDER UP TO ROOF HATCH ABOVE SEE -/A-.-
246 ROOF DRAIN AND OVERFLOW. DAYLIGHT 12" A.F.F. SEE DETAIL 6/ A8.4.1
248 ROOF DRAIN ROUTED WITHIN WALL FRAMING
256 PROVIDE TACTILE EXIT SIGN TO EXIT. SEE DETAIL 6/A9.9.1
257 SHELL DUCTS REFER TO MECHANICAL DRAWINGS FOR FURTHER INFORMATION
259 PRECAST CONCRETE STAIR TREADS AND RISER INSTALLED ON STEEL STRINGERS. PRECAST TREADS TO PROVIDE CAST IN THREADED INSERT FOR BOLTING OR AN EMBEDDED BOTTOM WELD PLATE FOR WELDING. SEE A7.1.1 FOR TYPICAL PLAN
261 FABRIC SUN SHADE ON SLIDERS MOUNTED TO TRELLIS - TYP.
262 WOOD STOREFRONT ASSEMBLY SYSTEM TO MATCH DURATHERM OR EQ. VERTICAL MULLIONS @ 36" O.C. TYP. WITH LOW-E INSULATED GLAZING. PROVIDE TEMPERED GLASS WHEN BOTTOM EDGE OF GLAZING IS BELOW 18", HAS 9 SQUARE FEET OR GREATER AREA, IS WITHIN 60" ABOVE A WALKING PATH VERTICALLY, AND IS WITHIN 36" OF WALKING PATH HORIZONTALLY - TYP.
269 W FLANGE COLUMN PER STRUCTURAL DRAWINGS. SPRAY-APPLIED FIREPROOFING ON ALL PRIMARY STRUCTURAL MEMBERS - TYP.
273 WOOD STOREFRONT DOOR ASSEMBLY TO MATCH DURATHERM OR EQ. WITH LOW-E INSULATED GLAZING. REFERENCE SHEET A10.1.1 FOR DOOR SCHEDULE SIZING. PROVIDE TEMPERED GLASS WHEN BOTTOM EDGE OF GLAZING IS BELOW 18", HAS 9 SQUARE FEET OR GREATER AREA, IS WITHIN 60" ABOVE A WALKING PATH VERTICALLY, AND IS WITHIN 36" OF WALKING PATH HORIZONTALLY - TYP.
287 8" HORIZONTAL WOOD T&G (1/4" FINE LINE) SIDING - RUNNING BOND O/ WEATHER BARRIER O/ PLYWOOD SHEATHING BONDED TO CONTINUOUS R-10 RIGID INSULATION O/ METAL STUDS W/ R-19 BATT INSULATION
290 8" HORIZONTAL WOOD T&G (1/4" FINE LINE) SIDING - RUNNING BOND O/ WEATHER BARRIER O/ PLYWOOD SHEATHING BONDED TO CONTINUOUS R-10 RIGID INSULATION O/ METAL STUDS W/ R-19 BATT INSULATION O/ 1" CORE BOARD
293 FLOOR FINISH BY TENANT
440 CERAMIC TILE O/ ADJUSTABLE PEDESTAL O/ PVC MEMBRANE W/ EVFM O/ DENSDECK O/ TAPERED INSULATION SLOPED TO DRAIN O/ CONCRETE METAL DECK.

FLOOR PLAN GENERAL NOTES

01 REFER TO STRUCTURAL PLANS FOR FURTHER INFORMATION
02 REFER TO ELECTRICAL PLANS FOR FURTHER INFORMATION
03 REFER TO MECHANICAL PLANS FOR FURTHER INFORMATION
04 REFER TO PLUMBING PLANS FOR FURTHER INFORMATION
06 REFER TO FINISH PLAN AND SCHEDULE FOR INTERIOR WALL, CEILING AND FLOOR FINISH INFORMATION
07 DIMENSIONS ARE TO FACE OF FRAMING UNLESS SPECIFICALLY NOTED OTHERWISE
08 PROVIDE ADEQUATE BLOCKING IN WALLS FOR CABINETS AND OTHER WALL MOUNTED ACCESSORIES, INCLUDING BUT NOT LIMITED TO, HANDRAILS, SHELVING, AND BATHROOM FIXTURES
09 PROVIDE FIRE BLOCKING FOR WALL CAVITIES THAT EXCEED CBC HEIGHT LIMITATION
10 ALL CORRIDORS SHALL MAINTAIN A MINIMUM 44" CLEAR WIDTH THROUGHOUT THE TENANT SPACE AND ALL BUILDING EXITS, WHEN SERVING 50 OR MORE PERSONS
11 THE MAXIMUM OCCUPANCY LOAD SHALL BE POSTED IN EACH ASSEMBLY, DINING, AND/OR WAITING AREAS AS STATED ON PLANS.
12 PROVIDE FIRE EXTINGUISHERS (2-A-10-B.C.) THROUGHOUT. MINIMUM ONE (1) PER FLOOR, PER BUILDING WITH A MAXIMUM TRAVEL OF 75 FEET FROM ANY POINT TO A FIRE EXTINGUISHER
13 CONTRACTOR TO VERIFY ALL FIELD CONDITIONS PRIOR TO COMMENCEMENT OF WORK. ANY DISCREPANCIES IN THE FIELD AND DRAWINGS SHALL BE BROUGHT TO THE ATTENTION OF THE ARCHITECT OR OWNER PRIOR TO START OF WORK. ALL DIMENSIONS FROM EXISTING ELEMENTS ON THE DRAWINGS ARE APPROXIMATE AND SHALL BE VERIFIED IN THE FIELD
14 ALL DOOR OPENINGS ADJACENT TO A WALL SHALL RECEIVE A 4" OFFSET FROM THE ADJACENT WALL, UNLESS NOTED OTHERWISE
15 CONTRACTOR TO PROVIDE SMOOTH TRANSITION BETWEEN NEW AND EXISTING CONSTRUCTION. WHERE NEW CONSTRUCTION OCCURS, EXISTING SYSTEMS SHALL BE PROTECTED IN PLACE, EXTENDED AND FINISHED TO CREATE A COMPLETE SYSTEM AND SMOOTH TRANSITION TO NEW CONSTRUCTION
16 ALL NEW ROOF ASSEMBLIES TO BE CLASS "A"
17 REFER TO WALL TYPE SCHEDULES FOR FURTHER INFORMATION, SEE SHEET A9.1.1
18 PENETRATIONS OF FIRE-RESISTIVE WALLS, FLOOR-CEILING AND ROOF-CEILING SHALL BE PROTECTED AS REQUIRED IN CBC SECTION 714
19 STRUCTURAL ELEMENTS EXPOSED WITHIN WALLS, ARE REQUIRED TO HAVE THE SAME FIRE RESISTIVITY AS THE WALL AND FLOOR ASSEMBLIES
21 SIGNAGE REQUIREMENTS SHALL SATISFY SECTION. CBC 11B-216 AND CBC 11B-703.
22 IN BUILDINGS REQUIRED TO HAVE STANDPIPES, NOT LESS THAN ONE STANDPIPE SHALL BE PROVIDED FOR USE DURING CONSTRUCTION. STANDPIPES SHALL BE REVIEWED AND APPROVED PRIOR TO INSTALLATION
23 ALL FURNITURE AND EQUIPMENT IS BY OWNER AND IS SHOWN FOR COORDINATION PURPOSES ONLY.
24 PROVIDE ROOM IDENTIFICATION SIGN ON WALL ADJACENT TO ALL DOORS. REFER TO DETAIL 6/A9.9.1
25 FUTURE TENANT SPACES ARE DESIGNED FOR SHELL ONLY, NOT OCCUPANCY.
26 ALL EXTERIOR WOOD FINISHES SHALL BE LESS THAN TO BE 1" NOMINAL THICKNESS TO COMPLY WITH CBC 1404.5
27 FIRE-RETARDANT-TREATED WOOD MUST BE USED WHENEVER WOOD IS DETAILED, INCLUDING FRAMING AND PLYWOOD SHEATHING, TO COMPLY WITH CBC 603.1
28 ALL ELEMENTS OF THE BUILDING SHALL COMPLY WITH SECTION 602.2 AND 603 OF THE 2019 CBC FOR ALLOWABLE CONSTRUCTION MATERIALS.
29 ALL LIGHTING IS TO BE DESIGNED AND LOCATED SO THAT LIGHT RAYS ARE AIMED DOWNWARD ONTO THE SITE THAT IS ATTACHED TO THE WATER-FACING ELEVATION OF THE BUILDING PER SECTION 5.5.P OF THE DANA POINT HARBOR DISTRICT REGULATION.

DRAWINGS AND WRITTEN MATERIAL APPEARING HEREIN CONSTITUTE ORIGINAL AND UNPUBLISHED WORK OF SMS ARCHITECTS AND MAY NOT BE DUPLICATED, USED OR DISCLOSED WITHOUT WRITTEN CONSENT OF THE ARCHITECT

SMS ARCHITECTS
100 Progress | Suite 250
Irvine, California 92618
949.757.3240 | www.sms-arch.com

CONSTANT

DANA POINT HARBOR PARTNERS

PROJECT NAME
DANA POINT HARBOR COMMERCIAL CORE
BUILDING 12
1290 HARBOR WAY
DANA POINT, CA 92629

CLIENT
BWP PROPERTIES
BURNHAM|WARD

No.	DATE	ISSUE
	9/30/2022	50% SCHEMATIC DESIGN
	10/28/2022	100% SCHEMATIC DESIGN
	02/10/2023	100% DESIGN DEVELOPMENT
	03/17/2023	50% CONSTRUCTION DOCUMENTS
A	04/21/2023	COUNTY RESUBMITTAL
B	10/09/2024	CITY PLANNING RESUBMITTAL

PROJECT NO 22039
DATE JANUARY 25, 2023
DRAWING TITLE
LEVEL 2 FLOOR PLAN
DRAWING NO.
A2.0.2

C:\Users\Brandi\Documents\22039_DPH_Building 12-Arch_brandi@sms-arch.com.rvt

10/8/2024 5:09:18 PM

CITY OF DANA POINT
PLANNING DIVISION

This plan has been reviewed for ZONING ONLY and meets the requirements of Title 9 of the Dana Point Municipal Code.

APPROVED KBN

DATE 10/21/24

COMMENTS BUILDING 12 (OC PERMIT PKG21-0516) PER CDP13-0018(I).

Zoning: CanningK **11/13/2024**

Building&Safety: OCPWAzarvandB **12/22/2025**

Permits: BNR21-0246, ELE21-0853, MEC21-0514, PLB21-0900

County of Orange - OC Public Works
OC Development Services
APPROVED

This set of plans and specifications must be kept on the job at all times. It is unlawful to make any changes or alterations to these plans without written permission from OC Public Works, OC Development Services of Orange County. The stamping of these plan specifications SHALL NOT be held to permit or be an approval of the violation of any provisions of any County Ordinance or State law.

Hani Tahsbsaee
BUILDING OFFICIAL

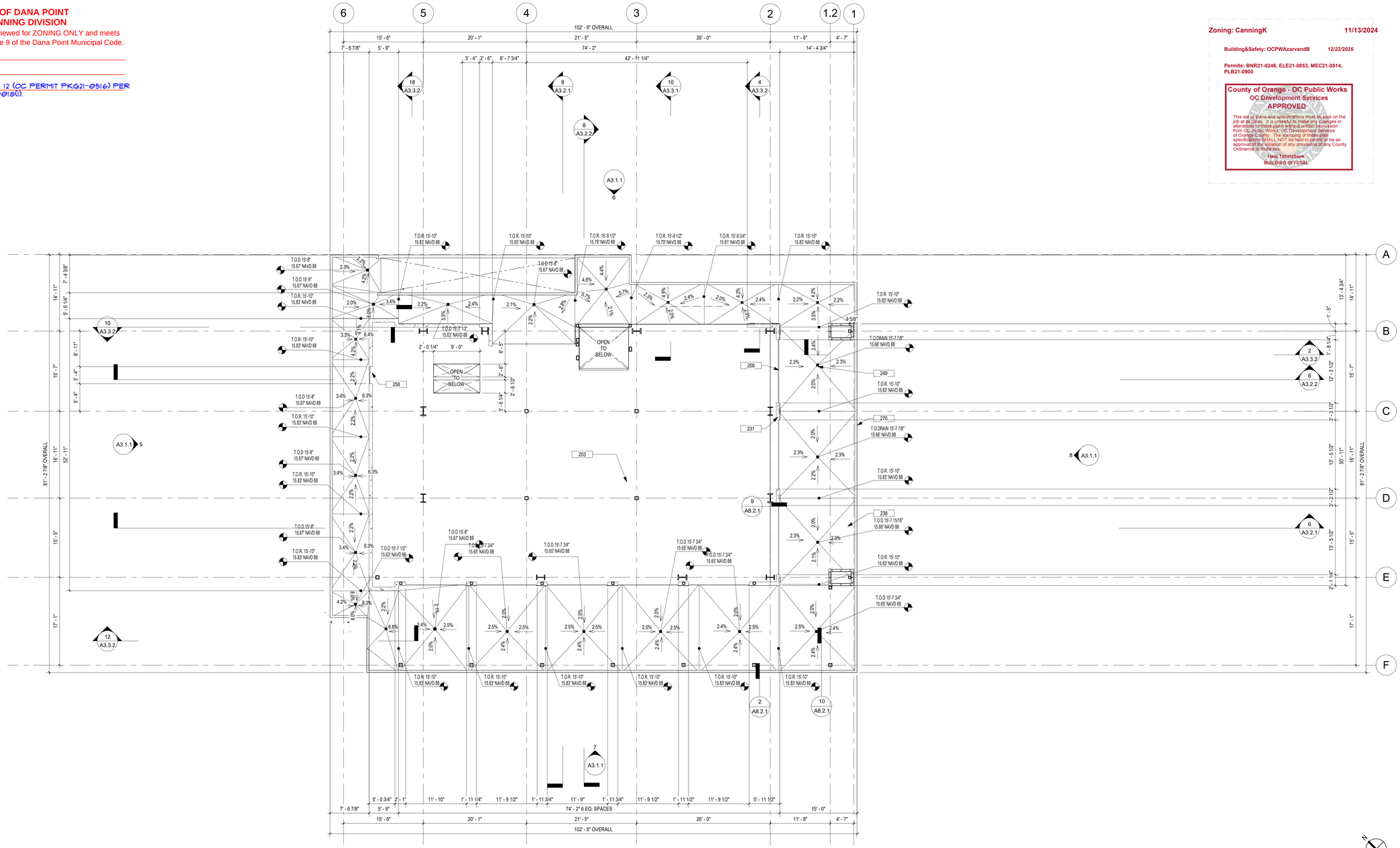

N

LEVEL 2 SLAB PLAN 3
1/8" = 1'-0" A3.1.1 A2.0.2a

SLAB PLAN KEYNOTES

203 CONCRETE O/ METAL DECK PER STRUCTURAL DRAWINGS
231 6" CONCRETE CURB AT BASE OF ALL EXTERIOR WALLS
238 WATERPROOF MEMBRANE O/ DENDSECK O/ TAPERED INSULATION O/ CONCRETE METAL DECK
249 FLOOR DRAIN TYP. REFER TO PLUMBING DRAWINGS
258 REFER TO FLOOR PLAN FOR DOOR LOCATION
270 CONCRETE CURB AT SEPARATE PERIMETER OF DECK

FLOOR PLAN GENERAL NOTES

01 REFER TO STRUCTURAL PLANS FOR FURTHER INFORMATION
02 REFER TO ELECTRICAL PLANS FOR FURTHER INFORMATION
03 REFER TO MECHANICAL PLANS FOR FURTHER INFORMATION
04 REFER TO PLUMBING PLANS FOR FURTHER INFORMATION
06 REFER TO FINISH PLAN AND SCHEDULE FOR INTERIOR WALL, CEILING AND FLOOR FINISH INFORMATION
07 DIMENSIONS ARE TO FACE OF FRAMING UNLESS SPECIFICALLY NOTED OTHERWISE
08 PROVIDE ADEQUATE BLOCKING IN WALLS FOR CABINETS AND OTHER WALL MOUNTED ACCESSORIES, INCLUDING BUT NOT LIMITED TO, HANDRAILS, SHELVING, AND BATHROOM FIXTURES
09 PROVIDE FIRE BLOCKING FOR WALL CAVITIES THAT EXCEED CBC HEIGHT LIMITATION
10 ALL CORRIDORS SHALL MAINTAIN A MINIMUM 44" CLEAR WIDTH THROUGHOUT THE TENANT SPACE AND ALL BUILDING EXITS, WHEN SERVING 50 OR MORE PERSONS
11 THE MAXIMUM OCCUPANCY LOAD SHALL BE POSTED IN EACH ASSEMBLY, DINING, AND/OR WAITING AREAS AS STATED ON PLANS.
12 PROVIDE FIRE EXTINGUISHERS (2-A-10-B.C.) THROUGHOUT. MINIMUM ONE (1) PER FLOOR, PER BUILDING WITH A MAXIMUM TRAVEL OF 75 FEET FROM ANY POINT TO A FIRE EXTINGUISHER
13 CONTRACTOR TO VERIFY ALL FIELD CONDITIONS PRIOR TO COMMENCEMENT OF WORK. ANY DISCREPANCIES IN THE FIELD AND DRAWINGS SHALL BE BROUGHT TO THE ATTENTION OF THE ARCHITECT OR OWNER PRIOR TO START OF WORK. ALL DIMENSIONS FROM EXISTING ELEMENTS ON THE DRAWINGS ARE APPROXIMATE AND SHALL BE VERIFIED IN THE FIELD
14 ALL DOOR OPENINGS ADJACENT TO A WALL SHALL RECEIVE A 4" OFFSET FROM THE ADJACENT WALL, UNLESS NOTED OTHERWISE
15 CONTRACTOR TO PROVIDE SMOOTH TRANSITION BETWEEN NEW AND EXISTING CONSTRUCTION. WHERE NEW CONSTRUCTION OCCURS, EXISTING SYSTEMS SHALL BE PROTECTED IN PLACE, EXTENDED AND FINISHED TO CREATE A COMPLETE SYSTEM AND SMOOTH TRANSITION TO NEW CONSTRUCTION
16 ALL NEW ROOF ASSEMBLIES TO BE CLASS "A"
17 REFER TO WALL TYPE SCHEDULES FOR FURTHER INFORMATION, SEE SHEET A9.1.1
18 PENETRATIONS OF FIRE-RESISTIVE WALLS, FLOOR-CEILING AND ROOF-CEILING SHALL BE PROTECTED AS REQUIRED IN CBC SECTION 714
19 STRUCTURAL ELEMENTS EXPOSED WITHIN WALLS, ARE REQUIRED TO HAVE THE SAME FIRE RESISTIVITY AS THE WALL AND FLOOR ASSEMBLIES
21 SIGNAGE REQUIREMENTS SHALL SATISFY SECTION. CBC 11B-216 AND CBC 11B-703.
22 IN BUILDINGS REQUIRED TO HAVE STANDPIPES, NOT LESS THAN ONE STANDPIPE SHALL BE PROVIDED FOR USE DURING CONSTRUCTION. STANDPIPES SHALL BE REVIEWED AND APPROVED PRIOR TO INSTALLATION
23 ALL FURNITURE AND EQUIPMENT IS BY OWNER AND IS SHOWN FOR COORDINATION PURPOSES ONLY.
24 PROVIDE ROOM IDENTIFICATION SIGN ON WALL ADJACENT TO ALL DOORS. REFER TO DETAIL 6/A9.9.1
25 FUTURE TENANT SPACES ARE DESIGNED FOR SHELL ONLY, NOT OCCUPANCY.
26 ALL EXTERIOR WOOD FINISHES SHALL BE LESS THAN TO BE 1" NOMINAL THICKNESS TO COMPLY WITH CBC 1404.5
27 FIRE-RETARDANT-TREATED WOOD MUST BE USED WHENEVER WOOD IS DETAILED, INCLUDING FRAMING AND PLYWOOD SHEATHING, TO COMPLY WITH CBC 603.1
28 ALL ELEMENTS OF THE BUILDING SHALL COMPLY WITH SECTION 602.2 AND 603 OF THE 2019 CBC FOR ALLOWABLE CONSTRUCTION MATERIALS.
29 ALL LIGHTING IS TO BE DESIGNED AND LOCATED SO THAT LIGHT RAYS ARE AIMED DOWNWARD ONTO THE SITE THAT IS ATTACHED TO THE WATER-FACING ELEVATION OF THE BUILDING PER SECTION 5.5.P OF THE DANA POINT HARBOR DISTRICT REGULATION.

SMS ARCHITECTS
100 Progress | Suite 250
Irvine, California 92618
949.757.3240 | www.sms-arch.com

CONSTANT

DANA POINT HARBOR PARTNERS

PROJECT NAME
DANA POINT HARBOR COMMERCIAL CORE
BUILDING 12
1290 HARBOR WAY
DANA POINT, CA 92629

CLIENT
BWP BURNHAM|WARD PROPERTIES

No.	DATE	ISSUE
	9/30/2022	50% SCHEMATIC DESIGN
	10/28/2022	100% SCHEMATIC DESIGN
	02/10/2023	100% DESIGN DEVELOPMENT
	03/17/2023	50% CONSTRUCTION DOCUMENTS
A	04/21/2023	COUNTY RESUBMITTAL
B	10/09/2024	CITY PLANNING RESUBMITTAL

DRAWINGS AND WRITTEN MATERIAL APPEARING HEREIN CONSTITUTE ORIGINAL AND UNPUBLISHED WORK OF SMS ARCHITECTS AND MAY NOT BE DUPLICATED, USED OR DISCLOSED WITHOUT WRITTEN CONSENT OF THE ARCHITECT

PROJECT NO 22039

DATE JANUARY 25, 2023

DRAWING TITLE
LEVEL 2 SLAB PLAN

DRAWING NO
A2.0.2a

C:\Users\Brandi\Documents\22039_DPH_Building 12-Arch_brandi@sms-arch.com.rvt

10/8/2024 5:09:21 PM

CITY OF DANA POINT
PLANNING DIVISION

This plan has been reviewed for ZONING ONLY and meets the requirements of Title 9 of the Dana Point Municipal Code.

APPROVED KBN

DATE 10/21/24

COMMENTS BUILDING 12 (OC PERMIT PKG21-9516) PER CDP13-0018(I).

Zoning: CanningK **11/13/2024**

Building&Safety: OCPWAzarvandB **12/22/2025**

Permits: BNR21-0246, ELE21-0853, MEC21-0514, PLB21-0900

County of Orange - OC Public Works
OC Development Services
APPROVED

This set of plans and specifications must be kept on the job at all times. It is unlawful to make any changes or alterations to these plans without written permission from OC Public Works, OC Development Services of Orange County. The stamping of these plan specifications SHALL NOT be held to permit or be an approval of the violation of any provisions of any County Ordinance or State law.

Hani Tahsbsaee
BUILDING OFFICIAL

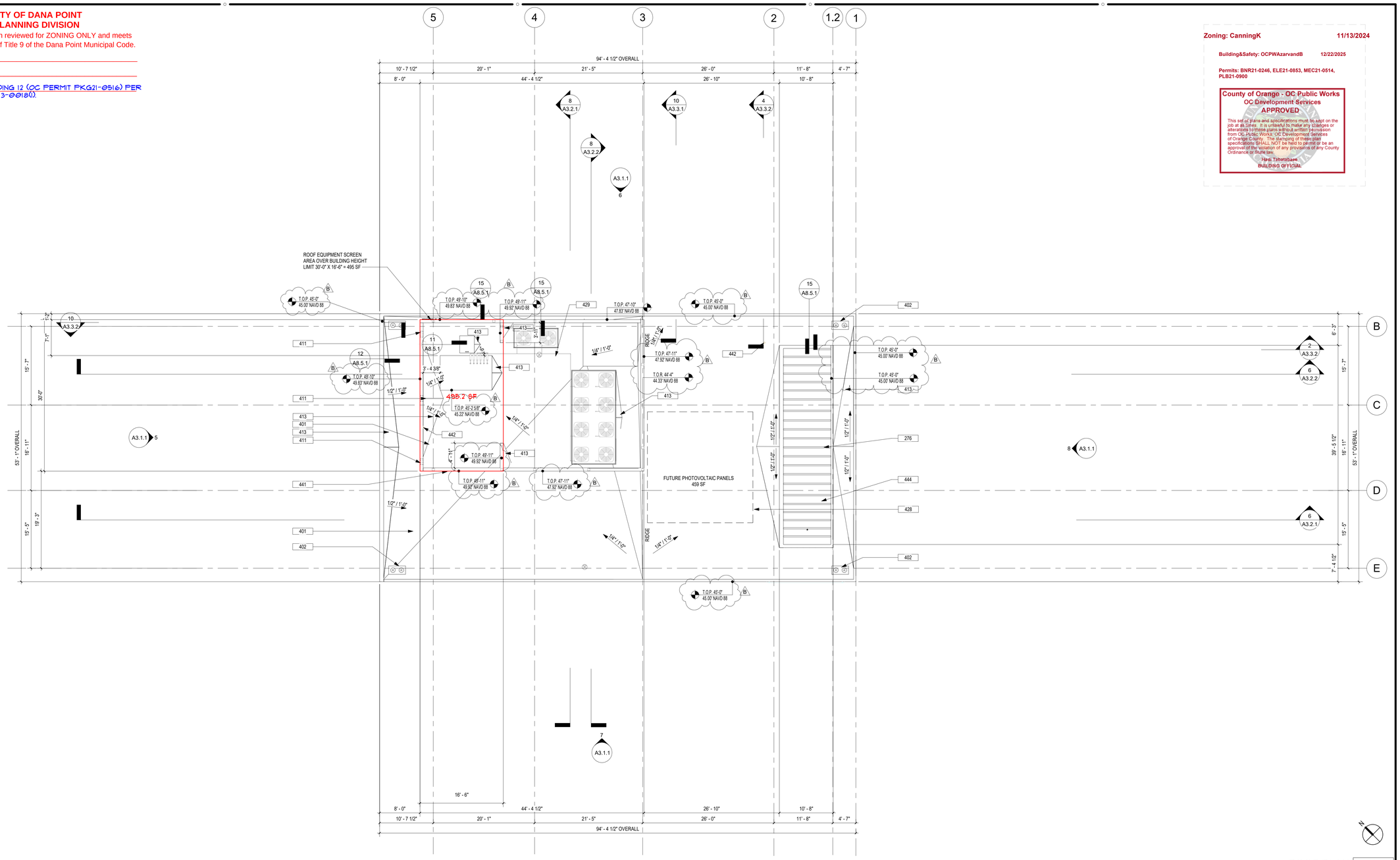

ROOF PLAN 3
1/8" = 1'-0" A3.2.1 A2.0.3

ROOF AREA CALCULATION

TOTAL ROOF AREA: **5,009.34 SF**
AREA OF PROPOSED PROJECTION ABOVE THE HEIGHT LIMIT: **495 SF**

CALCULATION
5,009.34 SF X 10% = **500.93 SF** ALLOWED OVER HEIGHT LIMIT

PROVIDED AREA OVER HEIGHT LIMIT
495 SF < 500.93 SF

B

ROOF PLAN KEYNOTES

276 OPEN DECORATIVE HORIZONTAL SLAT WOOD SCREEN SYSTEM - TYP.
401 SINGLE PLY PVC ROOF MEMBRANE O/ 1/4 DENSDECK O/ TAPERED RIGID INSULATION O/ PLYWOOD SHEATHING O/ METAL DECK. SLOPE TOWARD DRAINS @ 1/4": 1'-0" MIN
402 COMBINATION ROOF DRAIN WITH OVERFLOW. FLASH AND WATERPROOF TO MANUFACTURER'S INSTALL RECOMMENDATIONS. OVERFLOW TO BE PROVIDED WITH OVERFLOW FLANGE SEE DETAIL 10/A8.5.1
411 WALL SCUPPER FOR ROOF OVERFLOW / SCUPPER THRU ROOF SCREEN TO PROVIDED POSITIVE DRAINAGE TO ROOF DRAIN SEE DETAIL 15/A8.5.1
413 ROOF CRICKET TO PROVIDE POSITIVE DRAINAGE AROUND ROOF PARAPET, MECH EQUIPMENT, AND ROOF HATCH, 1/4":1'-0" MIN. SLOPE
428 DASHED LINE INDICATES FUTURE PHOTOVOLTAIC
429 MECHANICAL UNIT, SEE MECHANICAL DRAWINGS, TYP.
441 ROOF PARAPET SEE DETAIL 14/A8.5.1
442 ROOF VENT REFER TO PLUMBING DRAWINGS - TYP.
444 OPEN TO BELOW

ROOF PLAN GENERAL NOTES

01 REFER TO STRUCTURAL PLANS FOR ROOF FRAMING INFORMATION INCLUDING MEMBER SIZES AND CONNECTION HARDWARE
02 REFER TO ELECTRICAL PLANS FOR POWER DISTRIBUTION TO ROOF MOUNTED EQUIPMENT
03 REFER TO MECHANICAL PLANS FOR ROOF MOUNTED EQUIPMENT LOCATIONS AND TYPE
04 REFER TO PLUMBING DRAWINGS FOR FURTHER INFORMATION ON VENT PENETRATIONS
05 CONTRACTOR TO VERIFY ALL FIELD CONDITIONS PRIOR TO COMMENCEMENT OF WORK. ANY DISCREPANCIES IN THE FIELD AND/OR DRAWINGS SHALL BE BROUGHT TO THE ATTENTION OF THE ARCHITECT / OWNER PRIOR TO COMMENCEMENT OF WORK.
06 ALL NEW ROOF APPLICATIONS TO BE CLASS "A" INSTALLATION
07 INSTALLATION OF ROOFING MATERIAL TO BE IN ACCORDANCE WITH MANUFACTURER'S RECOMMENDATIONS
08 FIRE-RATARDANT-TREATED WOOD MUST BE USED WHEREVER WOOD IS DETAILED, INCLUDING FRAMING AND PLYWOOD SHEATHING, TO COMPLY WITH CBC 603.1
09 ALL EXTERIOR WOOD FINISHES SHALL NOT BE LESS THAN TO BE 1" NOMINAL THICKNESS TO COMPLY WITH CBC 1404.5
10 MECHANICAL EQUIPMENT: ALL ROOF-MOUNTED MECHANICAL EQUIPMENT AND COMMUNICATION DEVICES THAT ARE VISIBLE FROM THE HARBOR OR OTHER DESIGNATED PUBLIC VIEWS WILL BE HIDDEN BEHIND BUILDING PARAPETS OR SCREENING MATERIALS FROM BOTH GROUND LEVEL AND ELEVATED AREAS TO THE EXTENT FEASIBLE. GROUND-LEVEL MECHANICAL EQUIPMENT, STORAGE TANKS AND OTHER SIMILAR FACILITIES SHALL BE SCREENED FROM VIEW WITH DENSE LANDSCAPING AND/OR SOLID WALLS OF MATERIALS AND FINISHES COMPATIBLE WITH THE ADJACENT STRUCTURES. IF EQUIPMENT IS DETERMINED TO BE VISIBLE, ROOF SCREENS MAY BE REQUIRED TO SCREEN THE EQUIPMENT PER SECTION 5.5 (M) OF THE DANA POINT HARBOR DISTRICT REGULATION.

B

SMS ARCHITECTS
100 Progress | Suite 250
Irvine, California 92618
949.757.3240 | www.sms-arch.com

CONSTANT

DANA POINT HARBOR PARTNERS

PROJECT NAME
DANA POINT HARBOR COMMERCIAL CORE
BUILDING 12
1290 HARBOR WAY
DANA POINT, CA 92629

CLIENT
BURNHAM | WARD PROPERTIES
BWP

No.	DATE	ISSUE
	9/30/2022	50% SCHEMATIC DESIGN
	10/28/2022	100% SCHEMATIC DESIGN
	02/10/2023	100% DESIGN DEVELOPMENT
	03/17/2023	50% CONSTRUCTION DOCUMENTS
A	04/21/2023	COUNTY RESUBMITTAL
B	10/09/2024	CITY PLANNING RESUBMITTAL

DRAWINGS AND WRITTEN MATERIAL APPEARING HEREIN CONSTITUTE ORIGINAL AND UNPUBLISHED WORK OF SMS ARCHITECTS AND MAY NOT BE DUPLICATED, USED OR DISCLOSED WITHOUT WRITTEN CONSENT OF THE ARCHITECT

PROJECT NO. 22039
DATE JANUARY 25, 2023
DRAWING TITLE ROOF PLAN
DRAWING NO. **A2.0.3**

C:\Users\Brandi\Documents\22039_DPH_Building 12-Arch_brandi@sms-arch.com.rvt

10/16/2024 9:53:36 AM

CITY OF DANA POINT
PLANNING DIVISION

This plan has been reviewed for ZONING ONLY and meets the requirements of Title 9 of the Dana Point Municipal Code.

APPROVED KBN

DATE 10/21/24

COMMENTS BUILDING 12 (OC PERMIT PKG21-0516) PER CDP13-0018(I).

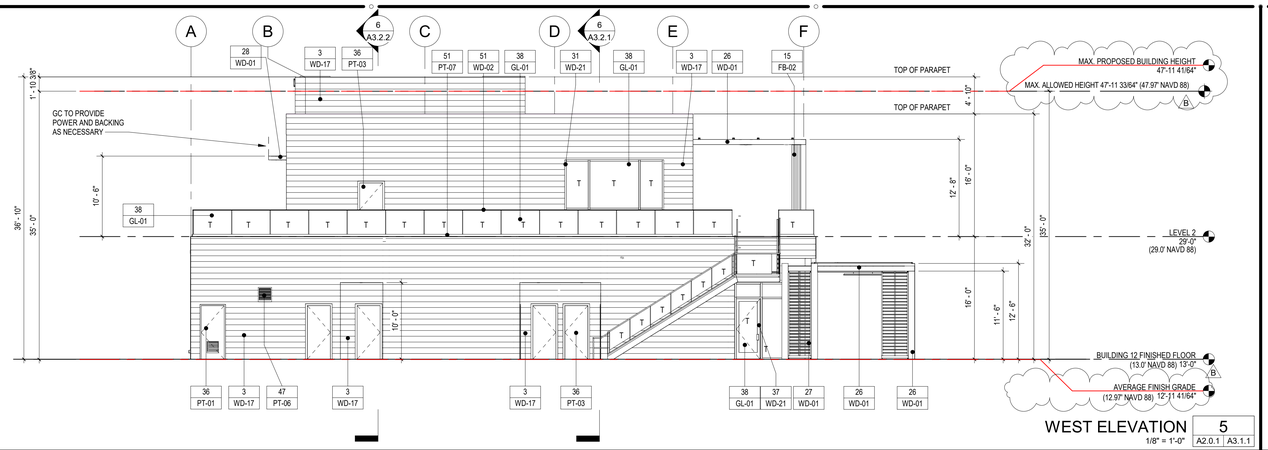

WEST ELEVATION 5
1/8" = 1'-0" A2.0.1 A3.1.1

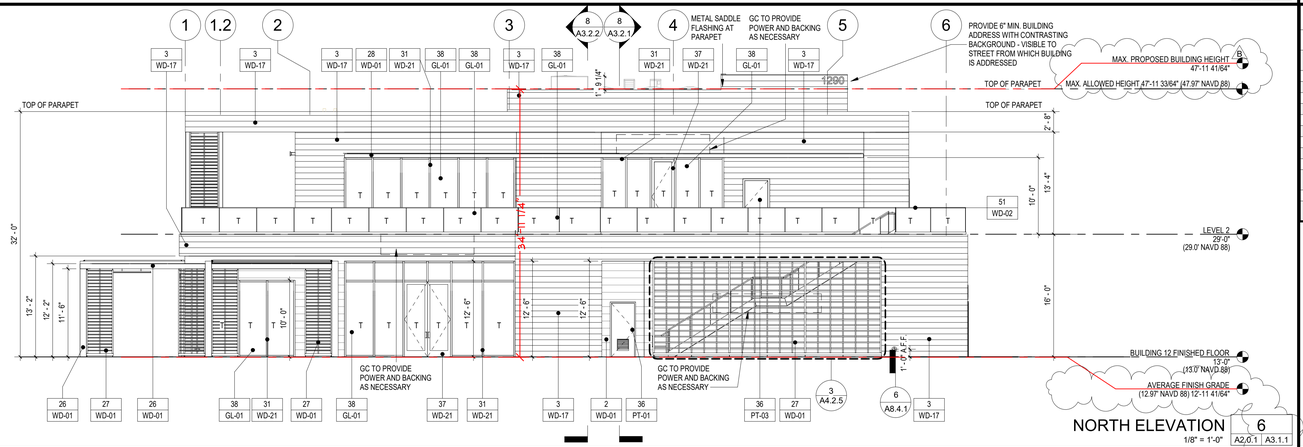

NORTH ELEVATION 6
1/8" = 1'-0" A2.0.1 A3.1.1

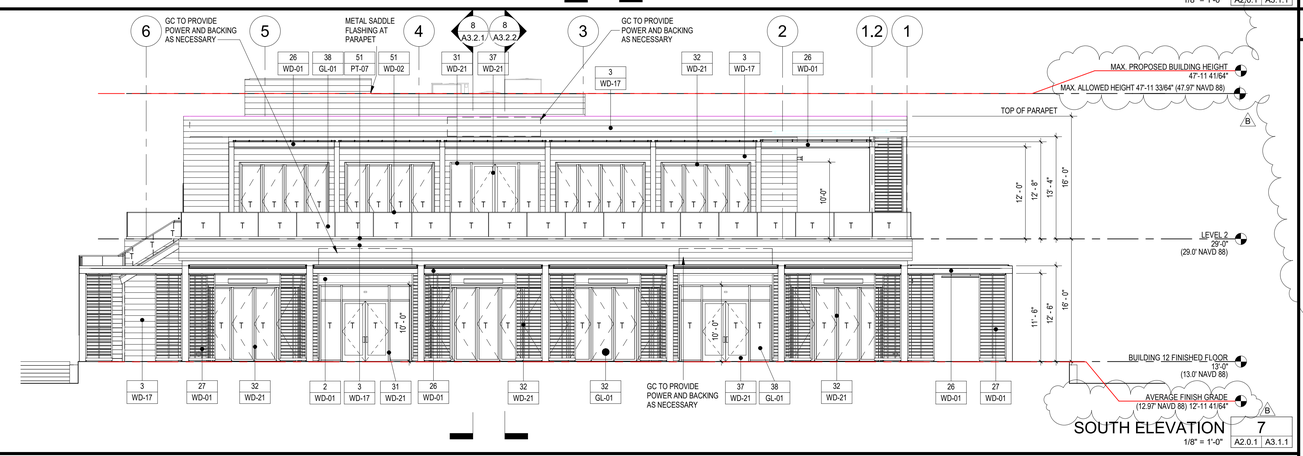

SOUTH ELEVATION 7
1/8" = 1'-0" A2.0.1 A3.1.1

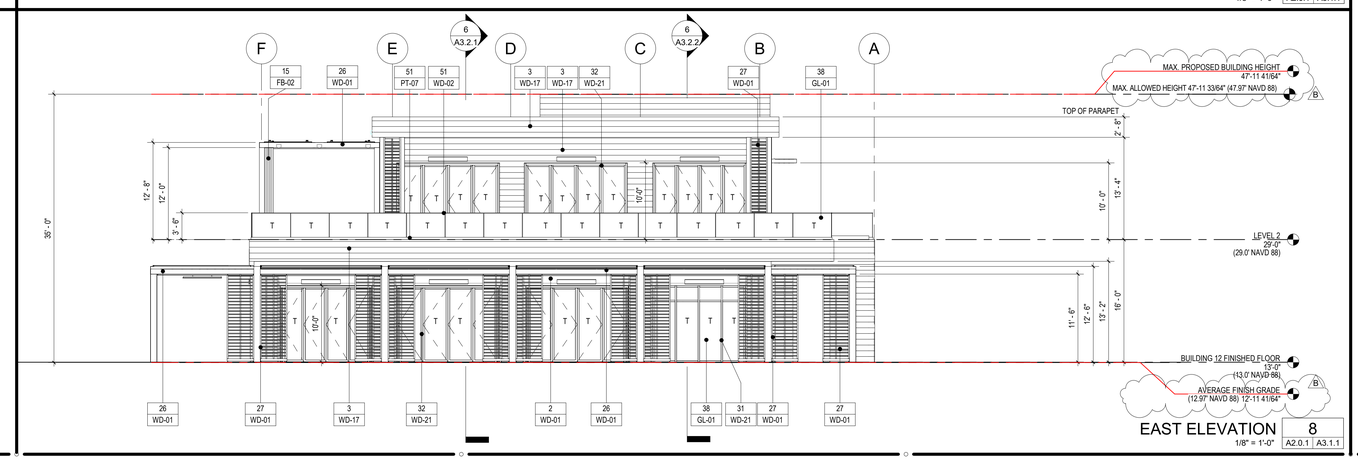

EAST ELEVATION 8
1/8" = 1'-0" A2.0.1 A3.1.1

MATERIALS

2	5" HORIZONTAL SHIPLAP SIDING WITH 1/8" GAP - RUNNING BOND
3	8" HORIZONTAL WOOD T&G (1/4" FINE LINE) SIDING - RUNNING BOND
15	FABRIC CURTAIN
26	WOOD TRELLIS
27	DURATHERM WOOD SCREENS
28	WOOD CANOPY
31	DURATHERM WOOD WINDOW SYSTEM
32	
36	DOOR PANEL AND FRAME
37	DURATHERM WOOD DOOR
38	LOW-E CLEAR GLAZING
43	PRECAST CONCRETE STAIR RISER/TREAD WITH INTEGRADED CONTRASTING STRIPE
47	EXHAUST AIR LOUVER CENTERED ABOVE DOOR
51	GLASS RAILING WITH ALUMINUM BASE RAIL WITH SQUARE ALUMINUM CAP

FINISHES

FB-02	SUNBRELLA - SALT 1
GL-01	
PT-01	SW9168 ELEPHANT EAR
PT-03	SW7069 IRON ORE
PT-07	PPG PAINT - CL3176N RACOON
WD-01	TERRAMAI - CUSTOM FINISH TO MATCH SAMPLE
WD-02	STAIN TO MATCH - VIEWRAIL OAK STAIN BLEACH
WD-17	WESTERN RED CEDAR -DELTA BLACK
WD-21	SAPELE MAHOGANY

ELEVATION GENERAL NOTES

01 ALL LIGHTING IS TO BE DESIGNED AND LOCATED SO THAT LIGHT RAYS ARE AIMED DOWNWARD ONTO THE SITE THAT IS ATTACHED TO THE WATER-FACING ELEVATION OF THE BUILDING PER SECTION 5.5 P OF THE DANA POINT HARBOR DISTRICT REGULATION.

02 MECHANICAL EQUIPMENT: ALL ROOF-MOUNTED MECHANICAL EQUIPMENT AND COMMUNICATION DEVICES THAT ARE VISIBLE FROM THE HARBOR OR OTHER DESIGNATED PUBLIC VIEWS WILL BE HIDDEN BEHIND BUILDING PARAPETS OR SCREENING MATERIALS FROM BOTH GROUND LEVEL AND ELEVATED AREAS TO THE EXTENT FEASIBLE. GROUND-LEVEL MECHANICAL EQUIPMENT, STORAGE TANKS AND OTHER SIMILAR FACILITIES SHALL BE SCREENED FROM VIEW WITH DENSE LANDSCAPING AND/OR SOLID WALLS OF MATERIALS AND FINISHES COMPATIBLE WITH THE ADJACENT STRUCTURES. IF EQUIPMENT IS DETERMINED TO BE VISIBLE, ROOF SCREENS MAY BE REQUIRED TO SCREEN THE EQUIPMENT PER SECTION 5.5 (M) OF THE DANA POINT HARBOR DISTRICT REGULATION.

03 THE DANA POINT HARBOR PARTNER'S SURVEY MAPPING FOR DANA POINT HARBOR IS BASED ON THE NORTH AMERICAN VERTICAL DATUM 1988 (NAVD-88) OCS BENCH MARK SRR-2-92, WHICH REFLECTS A VERTICAL ELEVATION DATUM DIFFERENCE OF 2.30 FEET HIGHER THAN THE NAVD-29 DATUM FOR THE SAME BENCH MARK. IT APPEARS THAT THE NAVD-29 DATUM WAS USED IN THE PREPARATION OF THE PREVIOUS DANA POINT HARBOR REVITALIZATION PLANS THAT WERE INCLUDED IN THE CITY OF DANA POINT APPROVED COASTAL DEVELOPMENT PERMIT APPLICATION DOCUMENTS BASED ON A COMPARISON OF SIMILAR SPOT ELEVATIONS.

04 BASED ON THE MORE RECENT READINGS TAKEN BY NOAA TIDAL DATA FOR THE LA JOLLA STATION 9410230, THE NVD-88 MEAN SEA LEVEL (MSL) ELEVATION FOR DANA POINT HARBOR IS 2.54 FEET, VERSUS A NAVD-29 MSL OF 0.43 FEET. BASED ON REVIEW OF THE BUILDING ELEVATION EXHIBITS AND THE CONCEPTUAL GRADING PLANS PREVIOUSLY CREATED FOR THE DANA POINT HARBOR REVITALIZATION PROJECT, IT APPEARS THE MSL ELEVATION OF 0.00 WAS THE MSL ELEVATION REFLECTED IN THE DANA POINT HARBOR REVITALIZATION BUILDING ELEVATION PLANS THAT WERE INCLUDED IN THE CITY OF DANA POINT APPROVED COASTAL DEVELOPMENT PERMIT APPLICATION DOCUMENTS.

Zoning: CanningK 11/13/2024

Building&Safety: OCPWAzarvandB 12/22/2025

Permits: BNR21-0246, ELE21-0853, MEC21-0514, PLB21-0900

County of Orange - OC Public Works
OC Development Services
APPROVED

This set of plans and specifications must be kept on the job at all times. It is unlawful to make any changes or alterations to these plans without written permission from OC Public Works, OC Development Services of Orange County. The stamping of these plan specifications SHALL NOT be held to permit or be an approval of the violation of any provisions of any County Ordinance or State law.

Hind Tahtabaee
BUILDING OFFICIAL

SMS ARCHITECTS
100 Progress | Suite 250
Irvine, California 92618
949.757.3240 | www.sms-arch.com

CONSTANT

DANA POINT HARBOR PARTNERS

PROJECT NAME
DANA POINT HARBOR COMMERCIAL CORE
BUILDING 12
1290 HARBOR WAY
DANA POINT, CA 92629

CLIENT
BURNHAM | WARD PROPERTIES
BWP

LICENSED ARCHITECT
BRANDON DEDMON
No. C-37432
11.30.23
Exp. Date
STATE OF CALIFORNIA

No.	DATE	ISSUE
	9/30/2022	50% SCHEMATIC DESIGN
	10/28/2022	100% SCHEMATIC DESIGN
	02/10/2023	100% DESIGN DEVELOPMENT
	03/17/2023	50% CONSTRUCTION DOCUMENTS
A	04/21/2023	COUNTY RESUBMITTAL
B	10/09/2024	CITY PLANNING RESUBMITTAL

DRAWINGS AND WRITTEN MATERIAL APPEARING HEREIN CONSTITUTE ORIGINAL AND UNPUBLISHED WORK OF SMS ARCHITECTS AND MAY NOT BE DUPLICATED, USED OR DISCLOSED WITHOUT WRITTEN CONSENT OF THE ARCHITECT

PROJECT NO. 22039

DATE JANUARY 25, 2023

DRAWING TITLE
EXTERIOR ELEVATIONS

DRAWING NO.
A3.1.1

C:\Users\Brandi\Documents\22039_DPH_Building 12-Arch_brandi@sms-arch.com.rvt

10/16/2024 9:53:51 AM

CITY OF DANA POINT
PLANNING DIVISION

This plan has been reviewed for ZONING ONLY and meets the requirements of Title 9 of the Dana Point Municipal Code.

APPROVED KBN

DATE 10/21/24

COMMENTS BUILDING 12 (OC PERMIT PKG21-0516) PER CDP13-0018(I).

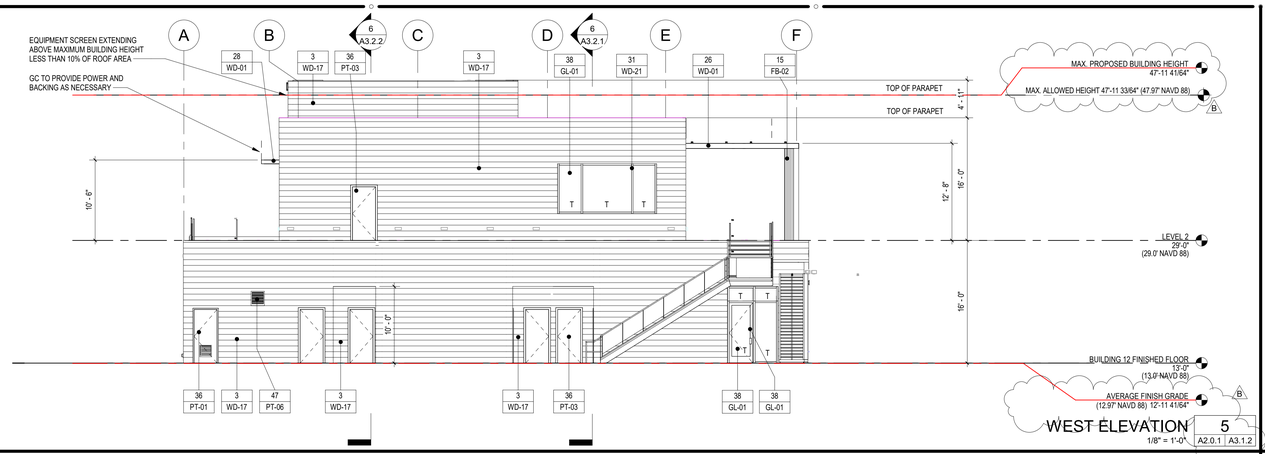

WEST ELEVATION 5
1/8" = 1'-0" A2.0.1 A3.1.2

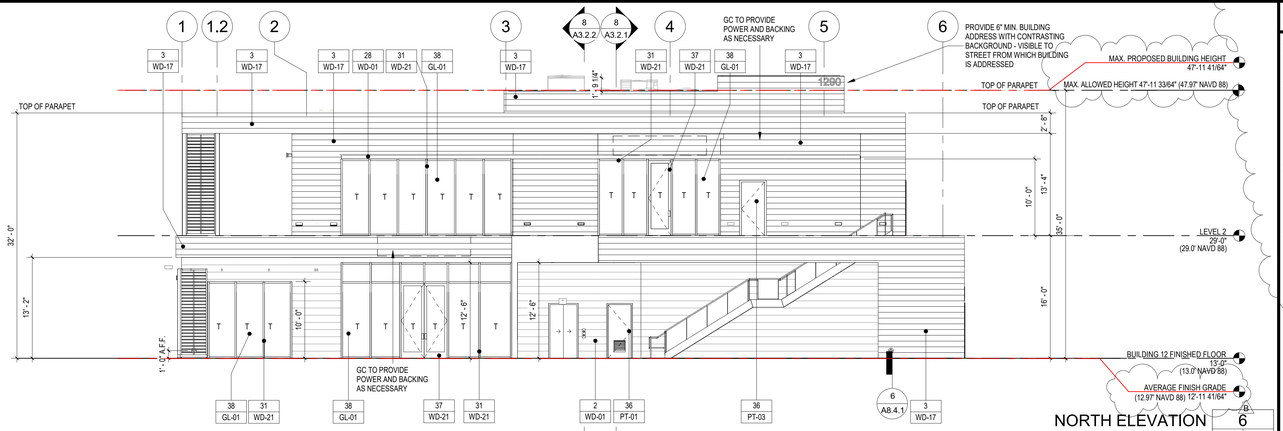

NORTH ELEVATION 6
1/8" = 1'-0" A2.0.1 A3.1.2

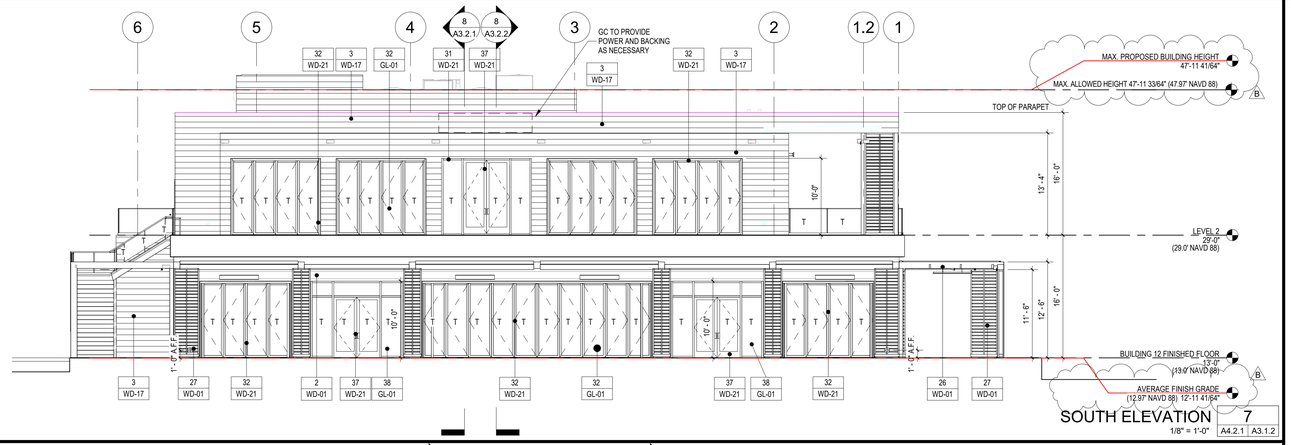

SOUTH ELEVATION 7
1/8" = 1'-0" A4.2.1 A3.1.2

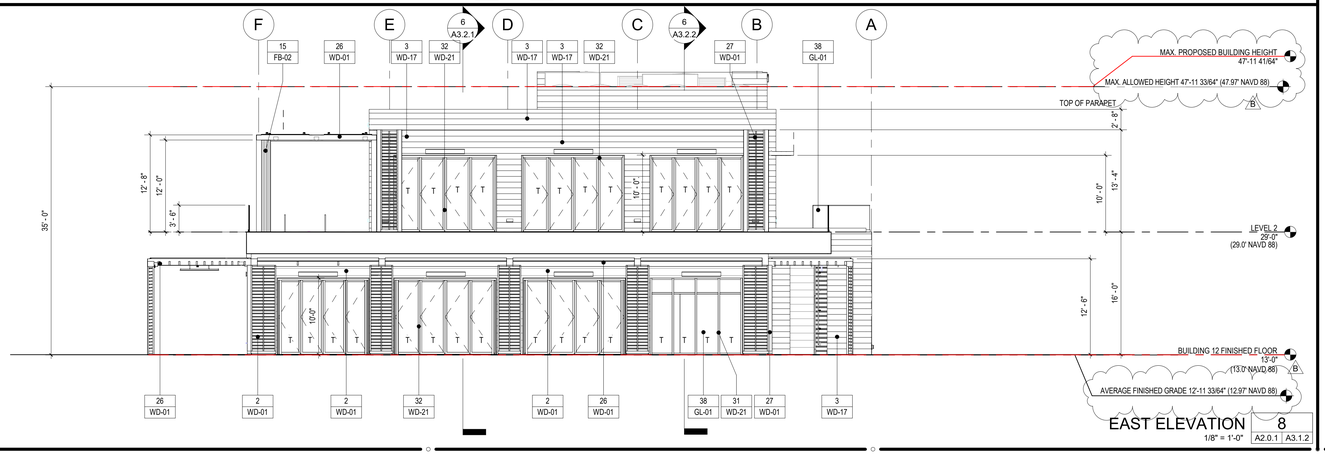

EAST ELEVATION 8
1/8" = 1'-0" A2.0.1 A3.1.2

ELEVATION GENERAL NOTES

01 ALL LIGHTING IS TO BE DESIGNED AND LOCATED SO THAT LIGHT RAYS ARE AIMED DOWNWARD ONTO THE SITE THAT IS ATTACHED TO THE WATER-FACING ELEVATION OF THE BUILDING PER SECTION 5.5 P OF THE DANA POINT HARBOR DISTRICT REGULATION.

02 MECHANICAL EQUIPMENT: ALL ROOF-MOUNTED MECHANICAL EQUIPMENT AND COMMUNICATION DEVICES THAT ARE VISIBLE FROM THE HARBOR OR OTHER DESIGNATED PUBLIC VIEWS WILL BE HIDDEN BEHIND BUILDING PARAPETS OR SCREENING MATERIALS FROM BOTH GROUND LEVEL AND ELEVATED AREAS TO THE EXTENT FEASIBLE. GROUND-LEVEL MECHANICAL EQUIPMENT, STORAGE TANKS AND OTHER SIMILAR FACILITIES SHALL BE SCREENED FROM VIEW WITH DENSE LANDSCAPING AND/OR SOLID WALLS OF MATERIALS AND FINISHES COMPATIBLE WITH THE ADJACENT STRUCTURES. IF EQUIPMENT IS DETERMINED TO BE VISIBLE, ROOF SCREENS MAY BE REQUIRED TO SCREEN THE EQUIPMENT PER SECTION 5.5 (M) OF THE DANA POINT HARBOR DISTRICT REGULATION.

03 THE DANA POINT HARBOR PARTNER'S SURVEY MAPPING FOR DANA POINT HARBOR IS BASED ON THE NORTH AMERICAN VERTICAL DATUM 1988 (NAVD-88) OCS BENCH MARK 3RR-2-82, WHICH REFLECTS A VERTICAL ELEVATION DATUM DIFFERENCE OF 2.30 FEET HIGHER THAN THE NAVD-29 DATUM FOR THE SAME BENCH MARK. IT APPEARS THAT THE NAVD-29 DATUM WAS USED IN THE PREPARATION OF THE PREVIOUS DANA POINT HARBOR REVITALIZATION PLANS THAT WERE INCLUDED IN THE CITY OF DANA POINT APPROVED COASTAL DEVELOPMENT PERMIT APPLICATION DOCUMENTS BASED ON A COMPARISON OF SIMILAR SPOT ELEVATIONS.

04 BASED ON THE MORE RECENT READINGS TAKEN BY NOAA TIDAL DATA FOR THE LA JOLLA STATION 9410230, THE NVD-88 MEAN SEA LEVEL (MSL) ELEVATION FOR DANA POINT HARBOR IS 2.54 FEET, VERSUS A NAVD-29 MSL OF 0.43 FEET. BASED ON REVIEW OF THE BUILDING ELEVATION EXHIBITS AND THE CONCEPTUAL GRADING PLANS PREVIOUSLY CREATED FOR THE DANA POINT HARBOR REVITALIZATION PROJECT, IT APPEARS THE MSL ELEVATION OF 0.00 WAS THE MSL ELEVATION REFLECTED IN THE DANA POINT HARBOR REVITALIZATION BUILDING ELEVATION PLANS THAT WERE INCLUDED IN THE CITY OF DANA POINT APPROVED COASTAL DEVELOPMENT PERMIT APPLICATION DOCUMENTS.

Zoning: CanningK **11/13/2024**

Building&Safety: OCPWAzarvandB **12/22/2025**

Permits: BNR21-0246, ELE21-0853, MEC21-0514, PLB21-0900

County of Orange - OC Public Works
OC Development Services
APPROVED

This set of plans and specifications must be kept on the job at all times. It is unlawful to make any changes or alterations to these plans without written permission from OC Public Works, OC Development Services of Orange County. The stamping of these plan specifications SHALL NOT be held to permit or be an approval of the violation of any provisions of any County Ordinance or State law.

Hind Tshetshasee
BUILDING OFFICIAL

SMS ARCHITECTS
100 Progress | Suite 250
Irvine, California 92618
949.757.3240 | www.sms-arch.com

CONSTANT

DANA POINT HARBOR PARTNERS

PROJECT NAME
DANA POINT HARBOR COMMERCIAL CORE
BUILDING 12
1290 HARBOR WAY
DANA POINT, CA 92629

CLIENT
BWP PROPERTIES
BURNHAM|WARD

LICENSED ARCHITECT
BRANDON DEDMON
No. C-37432
11.30.23
Exp. Date
STATE OF CALIFORNIA

No.	DATE	ISSUE
B	10/09/2024	CITY PLANNING RESUBMITTAL

DRAWINGS AND WRITTEN MATERIAL APPEARING HEREIN CONSTITUTE ORIGINAL AND UNPUBLISHED WORK OF SMS ARCHITECTS AND MAY NOT BE DUPLICATED, USED OR DISCLOSED WITHOUT WRITTEN CONSENT OF THE ARCHITECT

PROJECT NO 22039

DATE JANUARY 25, 2023

DRAWING TITLE
EXTERIOR ELEVATIONS

DRAWING NO.
A3.1.2

C:\Users\Brandi\Documents\22039_DPH_Building 12-Arch_brandi@sms-arch.com.rvt

10/16/2024 9:53:56 AM

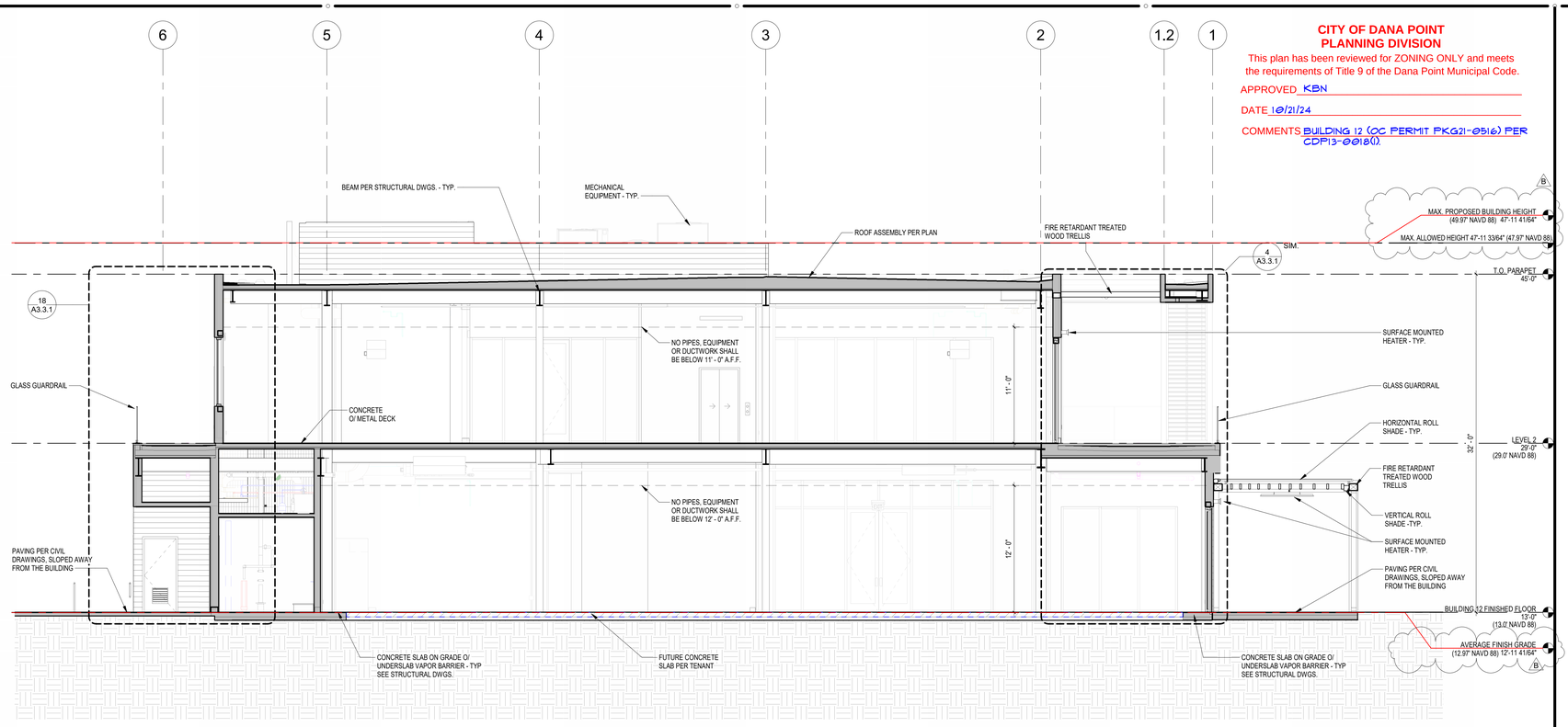

BUILDING SECTION 6
3/16" = 1'-0" A2.0.1 A3.2.1

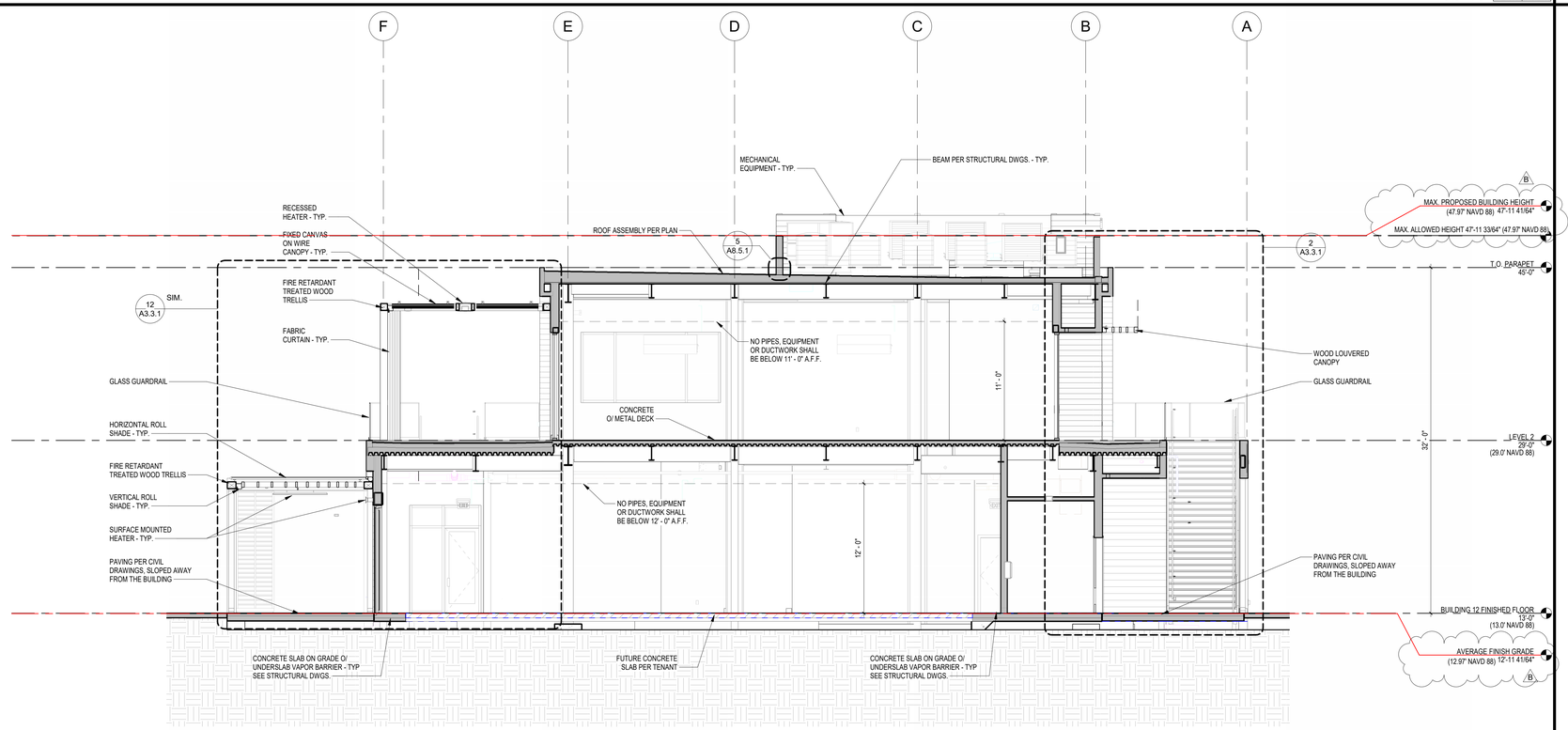

BUILDING SECTION 8
3/16" = 1'-0" A2.0.1 A3.2.1

C:\Users\Brandt\Documents\22039_DPH_Building 12-Arch_brandt@sms-arch.com.rvt

CITY OF DANA POINT
PLANNING DIVISION
This plan has been reviewed for ZONING ONLY and meets the requirements of Title 9 of the Dana Point Municipal Code.
APPROVED KBN
DATE 10/21/24
COMMENTS BUILDING 12 (OC PERMIT PKG21-0516) PER CDP13-0018(I).

Zoning: CanningK **11/13/2024**

Building&Safety: OCPWAzarvandB **12/22/2025**

Permits: BNR21-0246, ELE21-0853, MEC21-0514, PLB21-0900

County of Orange - OC Public Works
OC Development Services
APPROVED
This set of plans and specifications must be kept on the job at all times. It is unlawful to make any changes or alterations to these plans without written permission from OC Public Works, OC Development Services of Orange County. The stamping of these plan specifications SHALL NOT be held to permit or be an approval of the violation of any provisions of any County Ordinance or State law.
Hind Tahtabaee
BUILDING OFFICIAL

SMS ARCHITECTS
100 Progress | Suite 250
Irvine, California 92618
949.757.3240 | www.sms-arch.com

CONSTANT

DANA POINT HARBOR PARTNERS

PROJECT NAME
DANA POINT HARBOR COMMERCIAL CORE
BUILDING 12
1290 HARBOR WAY
DANA POINT, CA 92629

CLIENT
BURNHAM | WARD PROPERTIES
BWP

LICENSED ARCHITECT
BRANDON DEDMON
No. C-37432
11.30.23
Exp. Date
STATE OF CALIFORNIA

No.	DATE	ISSUE
	9/30/2022	50% SCHEMATIC DESIGN
	10/28/2022	100% SCHEMATIC DESIGN
	02/10/2023	100% DESIGN DEVELOPMENT
	03/17/2023	50% CONSTRUCTION DOCUMENTS
A	04/21/2023	COUNTY RESUBMITTAL
B	10/09/2024	CITY PLANNING RESUBMITTAL

DRAWINGS AND WRITTEN MATERIAL APPEARING HEREIN CONSTITUTE ORIGINAL AND UNPUBLISHED WORK OF SMS ARCHITECTS AND MAY NOT BE DUPLICATED, USED OR DISCLOSED WITHOUT WRITTEN CONSENT OF THE ARCHITECT

PROJECT NO. 22039
DATE JANUARY 25, 2023
DRAWING TITLE
BUILDING SECTIONS

DRAWING NO.
A3.2.1

10/16/2024 9:54:07 AM

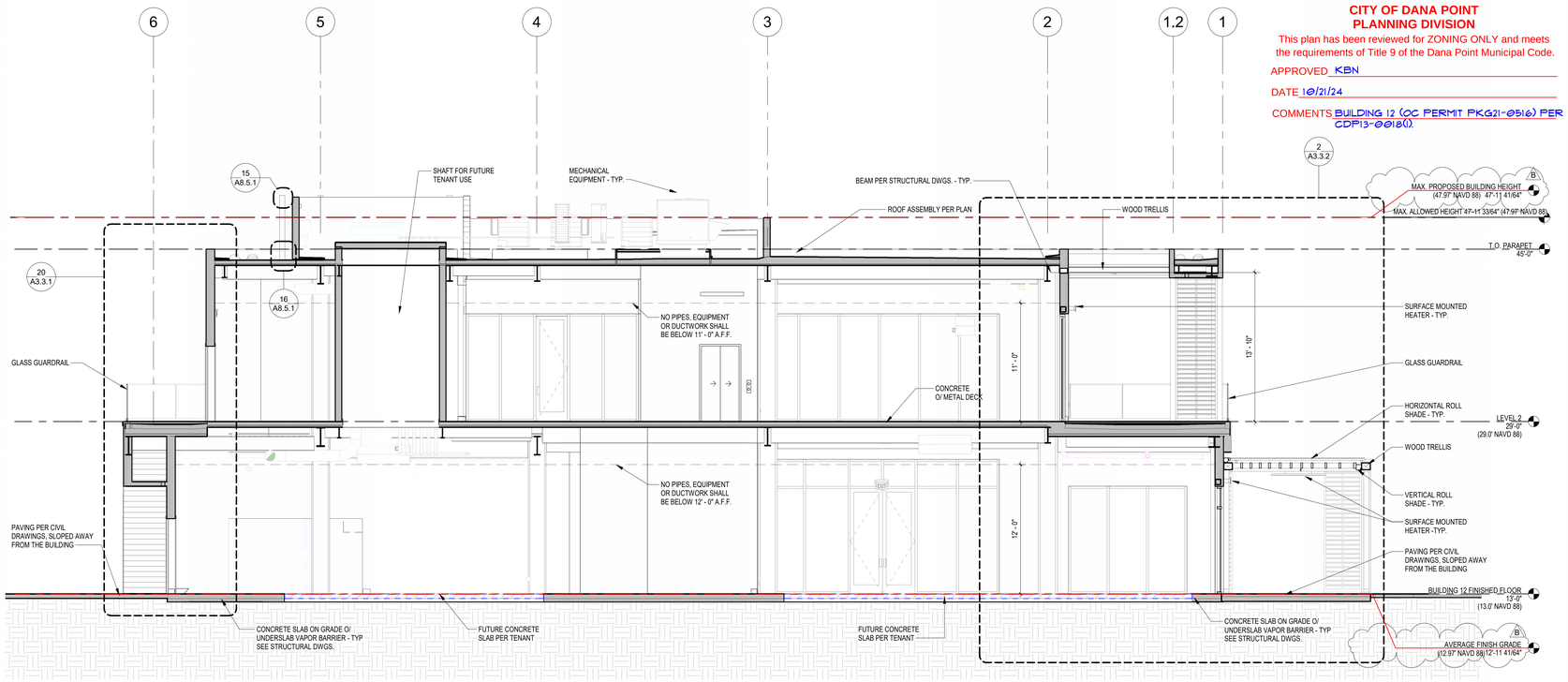

BUILDING SECTION 6
3/16" = 1'-0" A2.0.1 | A3.2.2

CITY OF DANA POINT
PLANNING DIVISION

This plan has been reviewed for ZONING ONLY and meets the requirements of Title 9 of the Dana Point Municipal Code.

APPROVED KBN

DATE 10/21/24

COMMENTS BUILDING 12 (OC PERMIT PKG21-0516) PER CDP13-0018(I).

Zoning: CanningK 11/13/2024

Building&Safety: OCPWAzarvandB 12/22/2025

Permits: BNR21-0246, ELE21-0853, MEC21-0514, PLB21-0900

County of Orange - OC Public Works
OC Development Services
APPROVED

This set of plans and specifications must be kept on the job at all times. It is unlawful to make any changes or alterations to these plans without written permission from OC Public Works, OC Development Services of Orange County. The stamping of these plan specifications SHALL NOT be held to permit or be an approval of the violation of any provisions of any County Ordinance or State law.

Hind Tahtabaee
BUILDING OFFICIAL

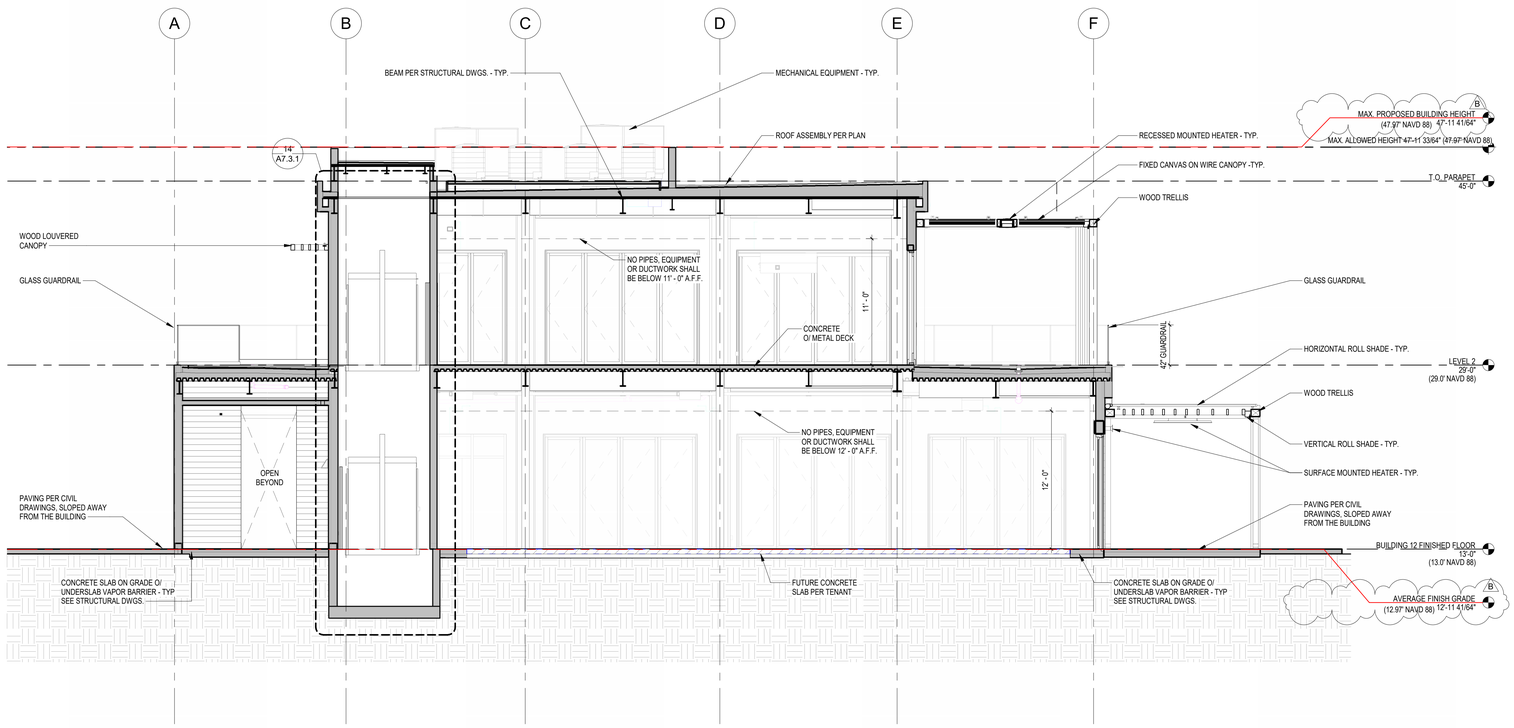

BUILDING SECTION 8
3/16" = 1'-0" A2.0.1 | A3.2.2

SMS ARCHITECTS
100 Progress | Suite 250
Irvine, California 92618
949.757.3240 | www.sms-arch.com

CONSTANT

DANA POINT HARBOR PARTNERS

PROJECT NAME
DANA POINT HARBOR COMMERCIAL CORE
BUILDING 12
1290 HARBOR WAY
DANA POINT, CA 92629

CLIENT
BWP PROPERTIES
BURNHAM|WARD

LICENSED ARCHITECT
BRANDON DEDMON
No. C-37432
11.30.23
Exp. Date
STATE OF CALIFORNIA

No.	DATE	ISSUE
	02/10/2023	100% DESIGN DEVELOPMENT
	03/17/2023	50% CONSTRUCTION DOCUMENTS
A	04/21/2023	COUNTY RESUBMITTAL
B	10/09/2024	CITY PLANNING RESUBMITTAL

DRAWINGS AND WRITTEN MATERIAL APPEARING HEREIN CONSTITUTE ORIGINAL AND UNPUBLISHED WORK OF SMS ARCHITECTS AND MAY NOT BE DUPLICATED, USED OR DISCLOSED WITHOUT WRITTEN CONSENT OF THE ARCHITECT

PROJECT NO. 22039

DATE JANUARY 25, 2023

DRAWING TITLE
BUILDING SECTIONS

DRAWING NO.
A3.2.2

C:\Users\Brandf\Documents\22039_DPH_Building 12-Arch_brandf@sms-arch.com.rvt

10/16/2024 9:54:20 AM

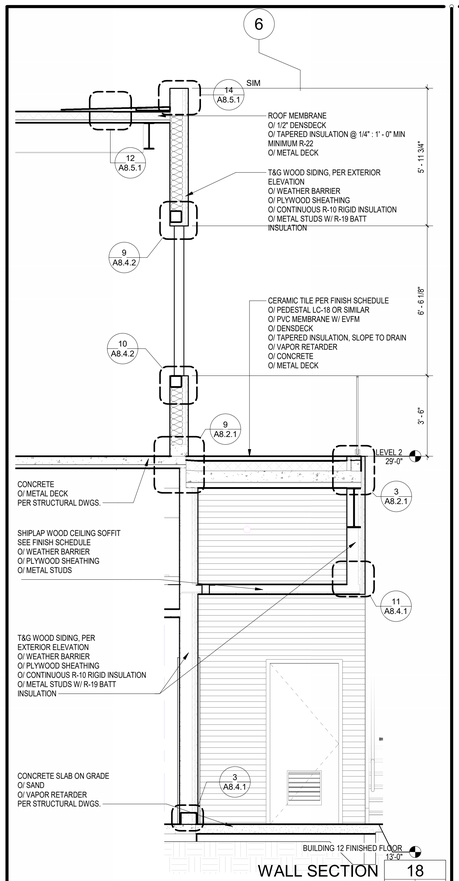

WALL SECTION 18
3/8" = 1'-0" | A3.2.1 | A3.3.1

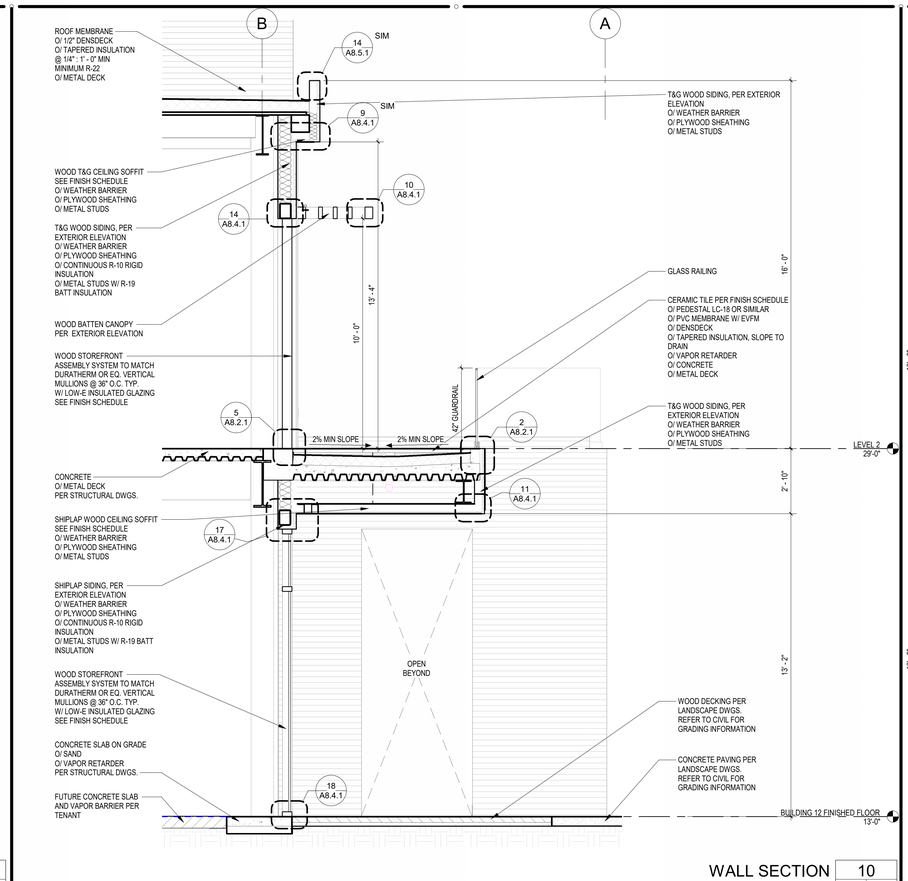

WALL SECTION 10
3/8" = 1'-0" | A2.0.1 | A3.3.1

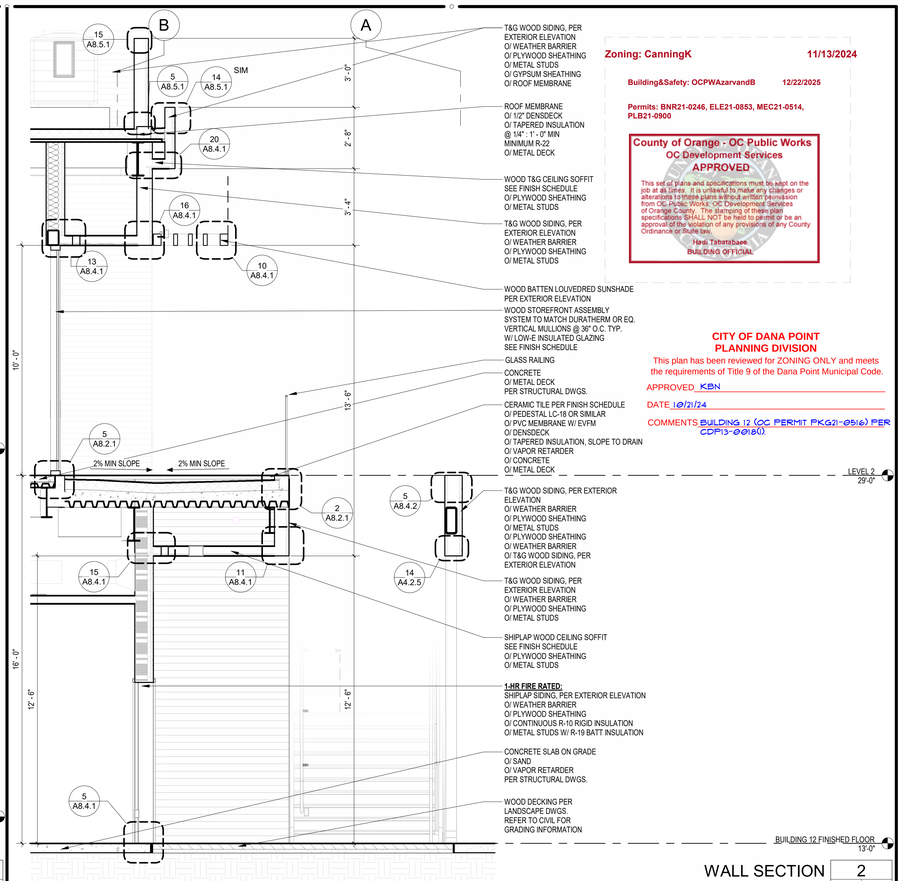

WALL SECTION 2
3/8" = 1'-0" | A3.2.1 | A3.3.1

Zoning: CanningK 11/13/2024

Building&Safety: OCPWAzarvandB 12/22/2025

Permits: BNR21-0246, ELE21-0853, MEC21-0514, PLB21-0900

County of Orange - OC Public Works
OC Development Services
APPROVED
This set of plans and specifications must be kept on the job at all times. It is unlawful to make any changes or alterations to these plans without written permission from OC Public Works, OC Development Services of Orange County. The stamping of these plan specifications SHALL NOT be held to permit or be an approval of the violation of any provisions of any County Ordinance or State law.
Hani Tahtabawi
BUILDING OFFICIAL

CITY OF DANA POINT
PLANNING DIVISION
This plan has been reviewed for ZONING ONLY and meets the requirements of Title 9 of the Dana Point Municipal Code.
APPROVED KBN
DATE 10/21/24
COMMENTS BUILDING 12 (OC PERMIT PKG21-05116) PER CDP13-0018(C)

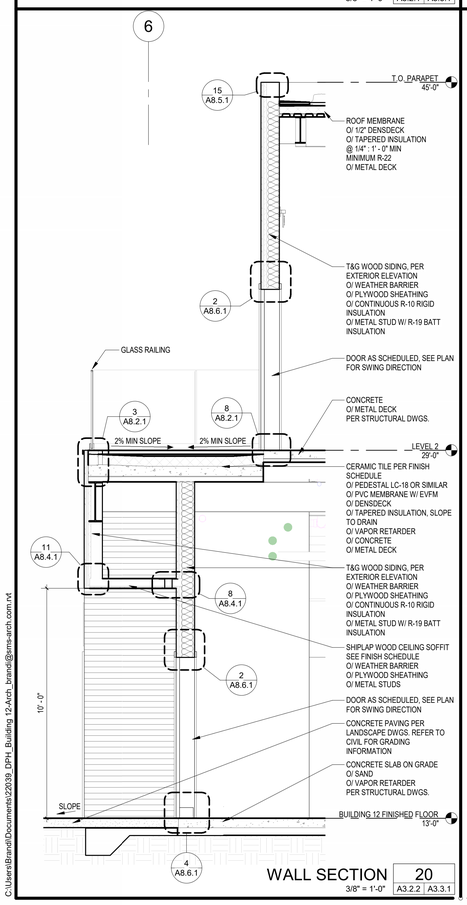

WALL SECTION 20
3/8" = 1'-0" | A3.2.2 | A3.3.1

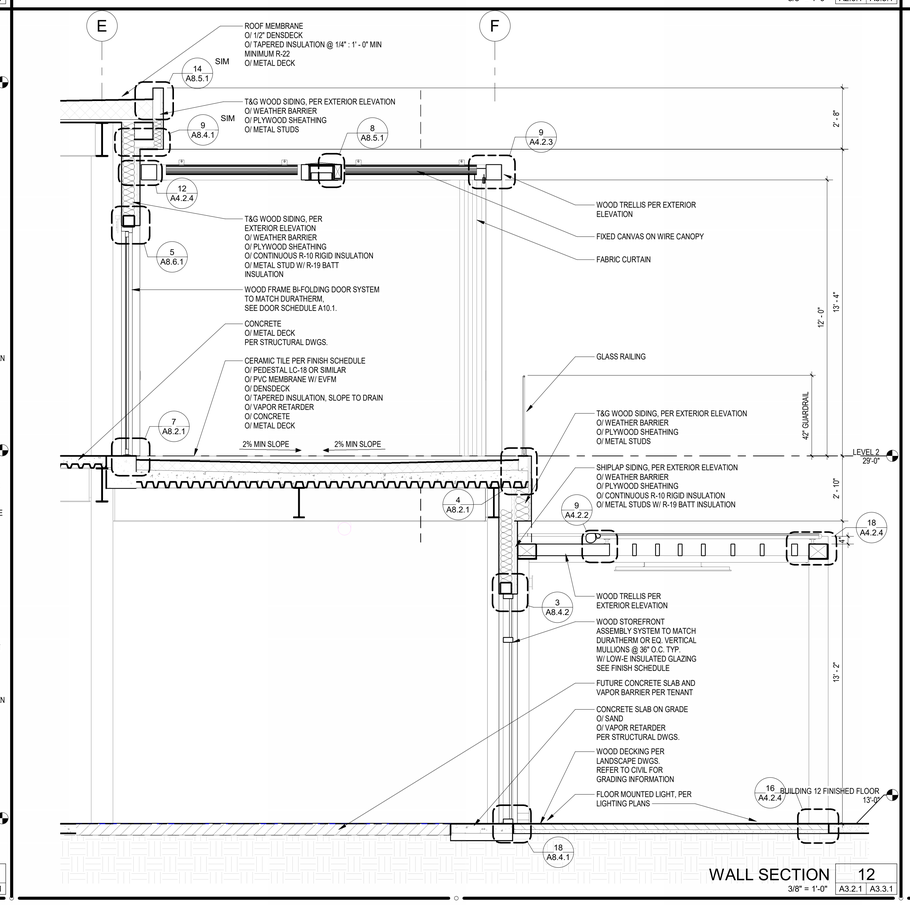

WALL SECTION 12
3/8" = 1'-0" | A3.2.1 | A3.3.1

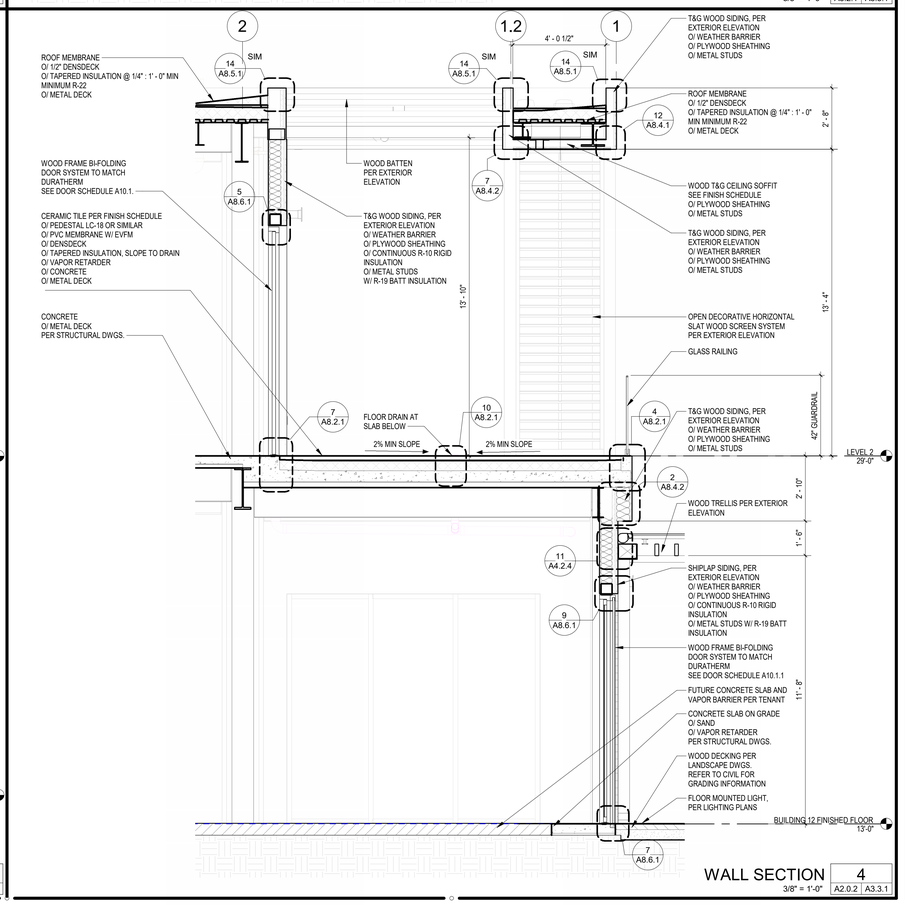

WALL SECTION 4
3/8" = 1'-0" | A2.0.2 | A3.3.1

SMS ARCHITECTS
100 Progress | Suite 250
Irvine, California 92618
949.757.3240 | www.sms-arch.com

CONSTANT

DANA POINT HARBOR PARTNERS

PROJECT NAME
DANA POINT HARBOR COMMERCIAL CORE
BUILDING 12
1290 HARBOR WAY
DANA POINT, CA 92629

CLIENT
BWP PROPERTIES
BURNHAM | WARD

LICENSED ARCHITECT
BANDON DEDMON
No. C-37432
11.30.23
Exp. Date
STATE OF CALIFORNIA

No.	DATE	ISSUE
	9/30/2022	50% SCHEMATIC DESIGN
	10/28/2022	100% SCHEMATIC DESIGN
	02/10/2023	100% DESIGN DEVELOPMENT
	03/17/2023	50% CONSTRUCTION DOCUMENTS
A	04/21/2023	COUNTY RESUBMITTAL
B	10/09/2024	CITY PLANNING RESUBMITTAL

DRAWINGS AND WRITTEN MATERIAL APPEARING HEREIN CONSTITUTE ORIGINAL AND UNPUBLISHED WORK OF SMS ARCHITECTS AND MAY NOT BE DUPLICATED, USED OR DISCLOSED WITHOUT WRITTEN CONSENT OF THE ARCHITECT

PROJECT NO 22039

DATE JANUARY 25, 2023

DRAWING TITLE
WALL SECTIONS

DRAWING NO.
A3.3.1

C:\Users\Brandi\Documents\22039_DPH_Building 12-Arch_brandi@sms-arch.com.rvt

10/8/2024 5:10:25 PM

CITY OF DANA POINT
PLANNING DIVISION

This plan has been reviewed for ZONING ONLY and meets the requirements of Title 9 of the Dana Point Municipal Code.

APPROVED KBN

DATE 10/21/24

COMMENTS BUILDING 12 (OC PERMIT PKG21-09516) PER CDP13-0018(I).

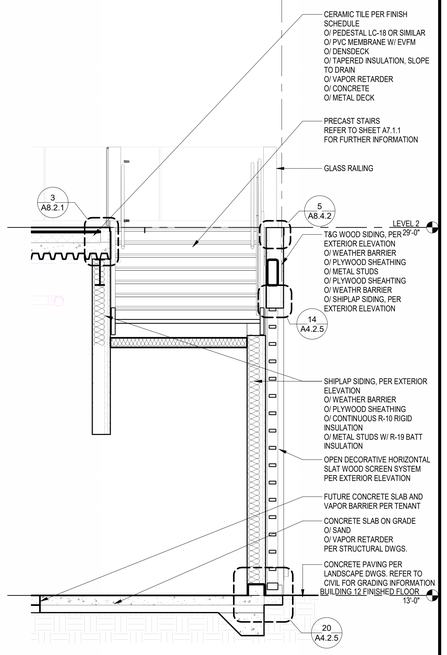

WALL SECTION 18
3/8" = 1'-0" A2.0.1 | A3.3.2

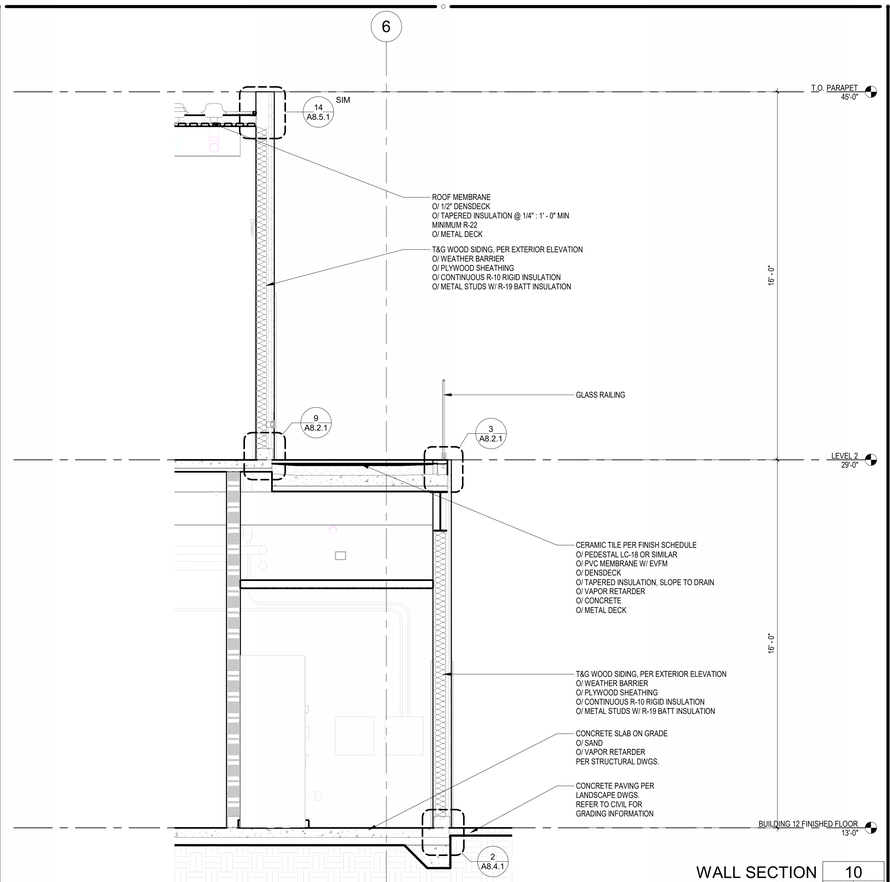

WALL SECTION 10
3/8" = 1'-0" A2.0.1 | A3.3.2

MAX. PROPOSED BUILDING HEIGHT
47-11 41/64

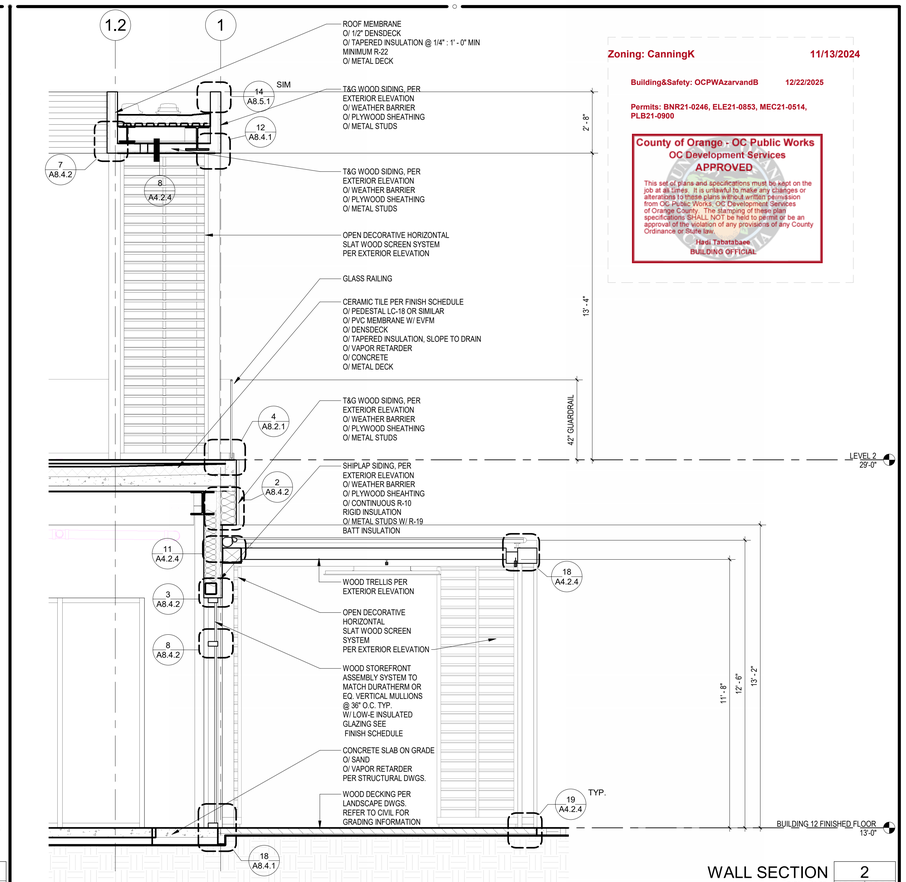

WALL SECTION 2
3/8" = 1'-0" A2.0.1 | A3.3.2

Zoning: CanningK 11/13/2024

Building&Safety: OCPWAzarvandB 12/22/2025

Permits: BNR21-0246, ELE21-0853, MEC21-0514, PLB21-0900

County of Orange - OC Public Works
OC Development Services
APPROVED

This set of plans and specifications must be kept on the job at all times. It is unlawful to make any changes or alterations to these plans without written permission from OC Public Works, OC Development Services of Orange County. The stamping of these plan specifications SHALL NOT be held to permit or be an approval of the violation of any provisions of any County Ordinance or State law.

Hind Tahtabaee
BUILDING OFFICIAL

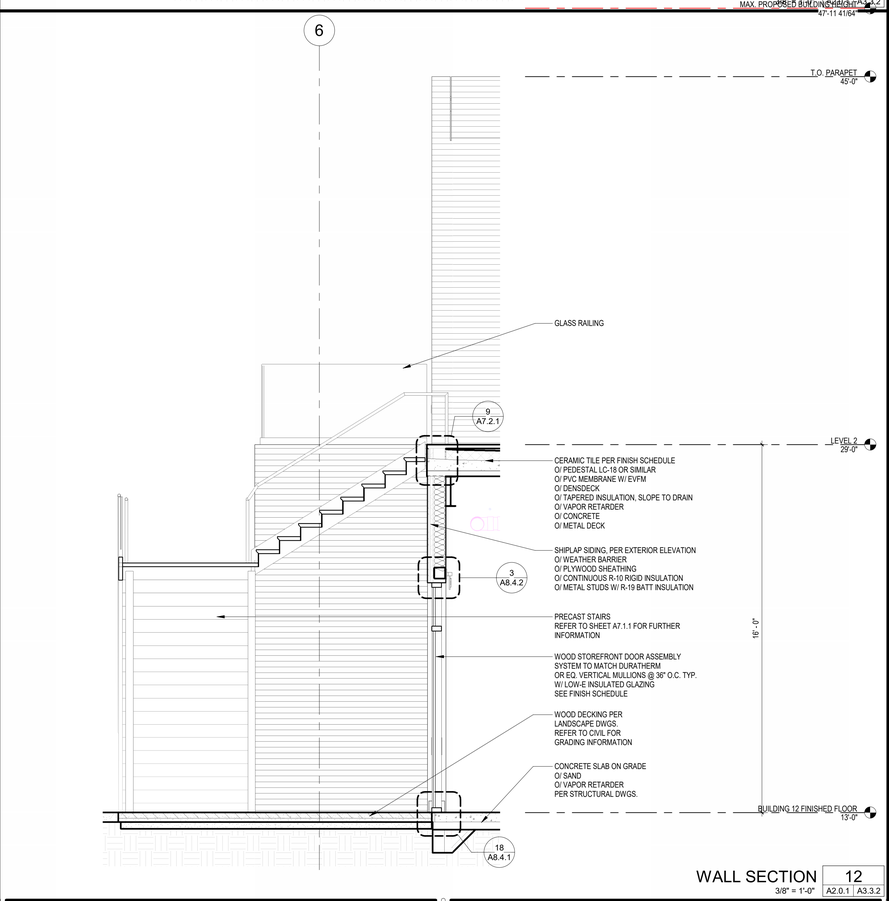

WALL SECTION 12
3/8" = 1'-0" A2.0.1 | A3.3.2

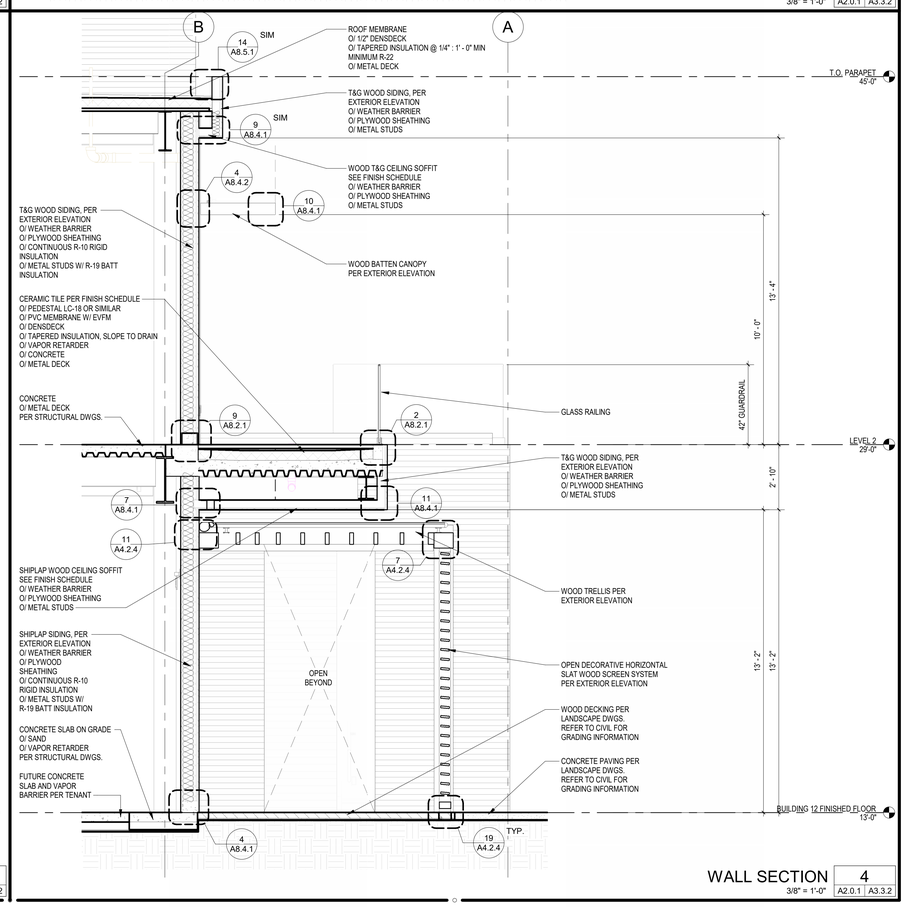

WALL SECTION 4
3/8" = 1'-0" A2.0.1 | A3.3.2

SMS ARCHITECTS
100 Progress | Suite 250
Irvine, California 92618
949.757.3240 | www.sms-arch.com

CONSTANT

DANA POINT HARBOR PARTNERS

PROJECT NAME
DANA POINT HARBOR COMMERCIAL CORE
BUILDING 12
1290 HARBOR WAY
DANA POINT, CA 92629

CLIENT
BURNHAM | WARD PROPERTIES
BWP

LICENSED ARCHITECT
BRANDON DEDMON
No. C-37432
11.30.23
Exp. Date
STATE OF CALIFORNIA

No.	DATE	ISSUE
	03/17/2023	50% CONSTRUCTION DOCUMENTS
A	04/21/2023	COUNTY RESUBMITTAL
B	10/09/2024	CITY PLANNING RESUBMITTAL

DRAWINGS AND WRITTEN MATERIAL APPEARING HEREIN CONSTITUTE ORIGINAL AND UNPUBLISHED WORK OF SMS ARCHITECTS AND MAY NOT BE DUPLICATED, USED OR DISCLOSED WITHOUT WRITTEN CONSENT OF THE ARCHITECT

PROJECT NO 22039

DATE JANUARY 25, 2023

DRAWING TITLE
WALL SECTIONS

DRAWING NO
A3.3.2

C:\Users\Brandi\Documents\22039_DPH_Building 12-Arch_brandi@sms-arch.com.rvt

10/8/2024 5:10:37 PM

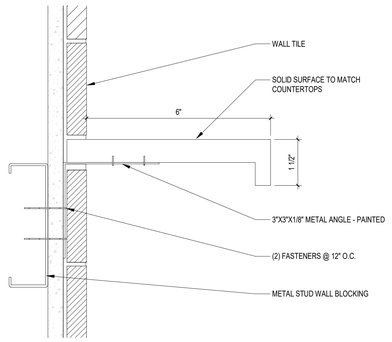

SHELF AT URINAL 17 (A4.1.1 | A4.1.1)
6" = 1'-0"

- FAUCET CONTROLS AND OPERATING MECHANISM SHALL BE OPERABLE WITH ONE HAND AND SHALL NOT REQUIRE TIGHT GRASPING, PINCHING OR TWISTING OF WRIST. LEVER OPERATED, PUSH-TYPE AND ELECTRONICALLY CONTROLLED MECHANISM ARE ACCEPTABLE. SELF-CLOSING VALVES ARE ALLOWED IF THE FAUCET REMAINS OPEN FOR AT LEAST 10 SECONDS.
- CLEAR FLOOR SPACE OF AT LEAST 30"X48" SHALL BE PROVIDED FOR FORWARD APPROACH AND SHALL BE ON AN ACCESSIBLE ROUTE. CLEAR SPACE SHALL EXTEND A MAX 19" UNDER SINK.

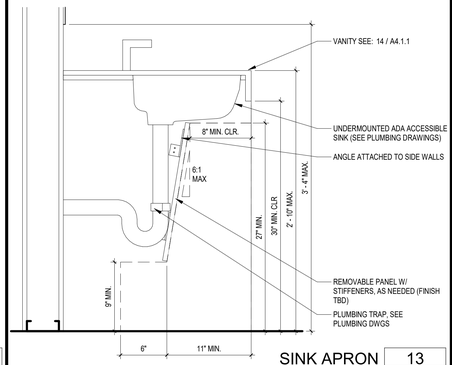

SINK APRON 13 (A4.1.1 | A4.1.1)
1 1/2" = 1'-0"

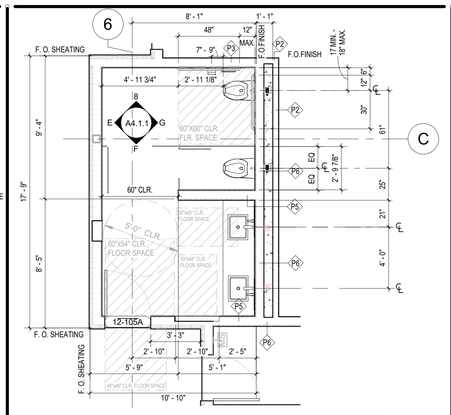

WOMENS RESTROOM FLOOR PLAN 9 (A2.0.1 | A4.1.1)
1/4" = 1'-0"

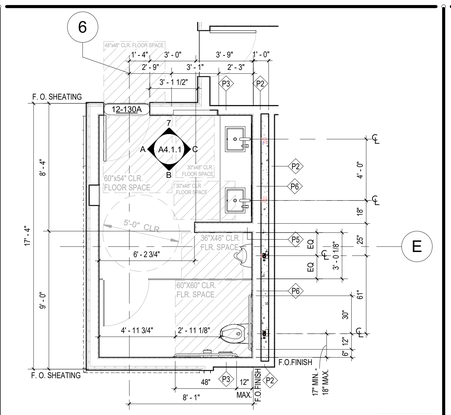

MENS RESTROOM FLOOR PLAN 5 (A2.0.1 | A4.1.1)
1/4" = 1'-0"

Zoning: CanningK 11/13/2024
Building&Safety: OCPWAzarvandB 12/22/2025
Permits: BNR21-0246, ELE21-0853, MEC21-0514, PLB21-0900
County of Orange - OC Public Works
OC Development Services
APPROVED
This set of plans and specifications must be kept on the job at all times. It is unlawful to make any changes or alterations to these plans without written permission from OC Public Works, OC Development Services of Orange County. The stamping of these plan specifications SHALL NOT be held to permit or be an approval of the violation of any provisions of any County Ordinance or State law.
Hind Tahetsbane
BUILDING OFFICIAL

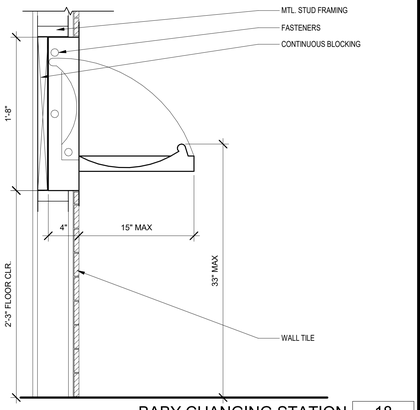

BABY CHANGING STATION 18 (A4.1.1 | A4.1.1)
1 1/2" = 1'-0"

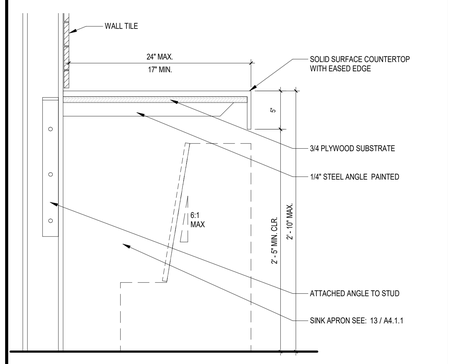

VANITY COUNTER 14 (A4.1.1)
1 1/2" = 1'-0"

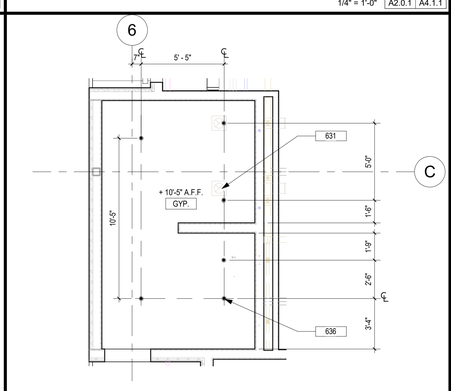

WOMENS REFLECTED CEILING PLAN 10 (A6.1.1 | A4.1.1)
1/4" = 1'-0"

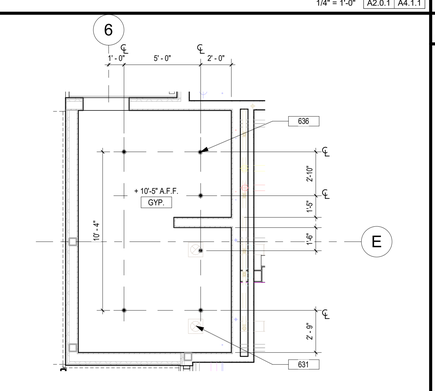

MENS REFLECTED CEILING PLAN 6 (A6.1.1 | A4.1.1)
1/4" = 1'-0"

MOUNTING HEIGHTS AND CLEARANCE

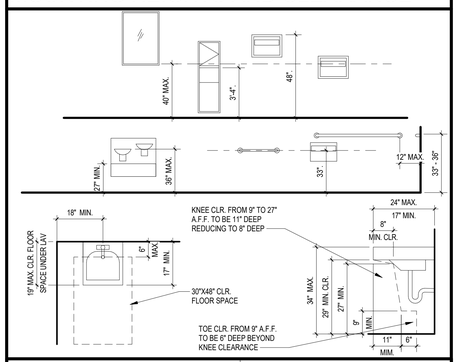

FIXTURE TYPE	MOUNTING HEIGHT
ACCESSIBLE WATER CLOSET	17 INCHES MIN. - 19 INCHES MAX.
ACCESSIBLE URINAL WITH ELONGATED RIM	17 INCHES MAXIMUM

RESTROOM GENERAL NOTES

1. PROVIDE TOILET ROOM DOOR SIGNAGE
2. PROVIDE BACKING PLATES FOR ALL EQUIPMENT AND FIXTURES.
3. SUBMIT FINAL LOCATION OF ALL ACCESS DOORS FOR APPROVAL.
4. LOCATE FLUSH VALVE SO THAT EXCESSIVE BODY MOVEMENT IS NOT REQUIRED.
5. MAXIMUM MOUNTING HEIGHT FOR ELECTRICAL SWITCHES AND OUTLETS 40 INCHES.
6. SEAL AROUND EDGES OF TOILET ACCESSORIES.
7. PROVIDE U-SHAPED HANDLE BELOW LATCH ON BOTH SIDES OF WATER CLOSET COMPARTMENT DOOR.
8. DRINKING FOUNTAIN WILL COMPLY WITH ALL APPLICABLE TITLE 24 PROVISIONS (BUBBLER HEIGHT, ETC.).
9. REFER TO INTERIOR FINISH SCHEDULE ON SHEET A10.1.1 FOR RESTROOM FINISHES.
10. PROVIDE LEVEL 5 FINISH IN RESTROOMS.
11. MIRROR MOUNTED SO BOTTOM OF REFLECTIVE SURFACE IS 40" MAX. NOT FRAME.

REFLECTED CEILING PLAN KEYNOTES

631 EXHAUST FAN REFER TO MECHANICAL DRAWINGS FOR FURTHER INFORMATION - TYP.
636 LIGHT FIXTURE PER LIGHTING DWGS. - TYP

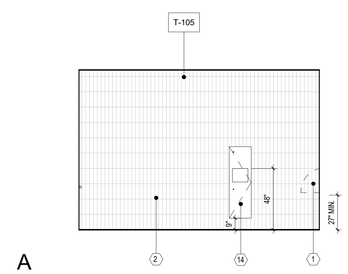

A

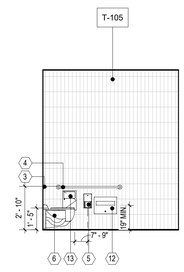

B

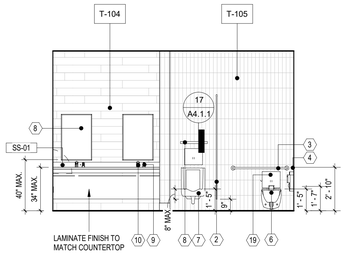

LAMINATE FINISH TO MATCH COUNTERTOP

C

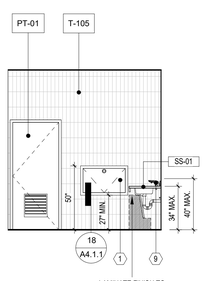

LAMINATE FINISH TO MATCH COUNTERTOP

D

MEN'S RESTROOM ELEVATION 7 (A4.1.1 | A4.1.1)
1/4" = 1'-0"

RESTROOM ACCESSORY SCHEDULE

Key note	Description	Manufacturer	Model
1	Recessed Baby Changing Station	Koala Kare	KB110-SSRE
2	Restroom Partitions, Floor-Mounted with Overhead Brace	Scranton Eclipse	Eclipse Partitions; Finish: Midnight-Orange Peel (Men's Restroom); Concrete-Orange Peel (Women's Restroom)
3	Straight Grab Bar - 42"	Bobrick Washroom Equipment, Inc.	B-5806x42
4	Straight Grab Bar - 48"	Bobrick Washroom Equipment, Inc.	B-5806x48
5	Multi-roll Toilet Tissue Dispenser, Surface Mounted	Bobrick Washroom Equipment, Inc.	B-4288
6	Commercial Flushometer Toilet, 1.28 GPF - ADA	TOTO USA, Inc.	CT708LWG
7	High-Efficiency Urinal (HEU), washdown, wall-hung, 0.125 gpf, rear spud	KOHLER Co.	K-4991-ER-0
8	Tempered Glass Channel Frame Mirror	Bobrick Washroom Equipment, Inc.	B-165 2436
9	Sloan Activated Electronic Soap Dispenser, Battery Powered	Sloan	ESD-600
10	Optima Deck Mount, battery, Sensor Activated Electronic Hand Washing Faucet for pre-tempered or hot and cold water operation.	SLOAN	EBF-615-4-BAT-BDM-CP-0.35GPM/MLM-IR-FCT
11	Under-mount bathroom sink	KOHLER Co.	K-2882-0
12	Toilet Seat-Cover Dispenser, Recessed	Bobrick Washroom Equipment, Inc.	B-3013
13	Sanitary Napkin Disposal, Surface Mounted	Bobrick Washroom Equipment, Inc.	B-254
14	TrimLine Series Recessed Combination Towel and Waste Unit	Bobrick Washroom Equipment, Inc.	B-39003
19	High Efficiency Concealed Toilet Flush Valve	TOTO USA, Inc.	TET2LA31#SS

CITY OF DANA POINT
PLANNING DIVISION
This plan has been reviewed for ZONING ONLY and meets the requirements of Title 9 of the Dana Point Municipal Code.
APPROVED KBN
DATE 10/21/24
COMMENTS BUILDING 12 (OC PERMIT PKG21-0516) PER CDP13-0018(D).

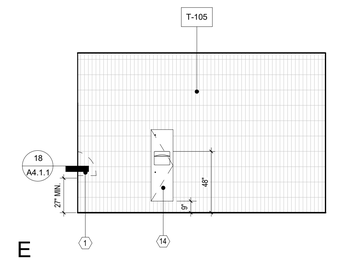

E

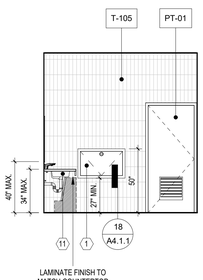

LAMINATE FINISH TO MATCH COUNTERTOP SEE DETAIL 13/ A4.1.1

F

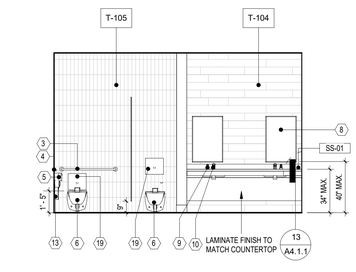

LAMINATE FINISH TO MATCH COUNTERTOP
13 A4.1.1

G

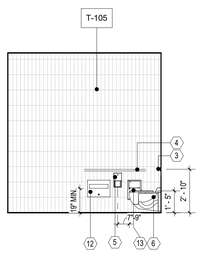

H

WOMENS RESTROOM ELEVATION 8 (A4.1.1 | A4.1.1)
1/4" = 1'-0"

SMS ARCHITECTS
100 Progress | Suite 250
Irvine, California 92618
949.757.3240 | www.sms-arch.com

CONSTANT

DANA POINT HARBOR PARTNERS

PROJECT NAME
DANA POINT HARBOR COMMERCIAL CORE
BUILDING 12
1290 HARBOR WAY
DANA POINT, CA 92629

CLIENT
BURNHAM|WARD PROPERTIES
BWP

LICENSED ARCHITECT
BRANDON DEDMON
No. C-37432
11.30.23
Exp. Date
STATE OF CALIFORNIA

No.	DATE	ISSUE
	9/30/2022	50% SCHEMATIC DESIGN
	10/28/2022	100% SCHEMATIC DESIGN
	02/10/2023	100% DESIGN DEVELOPMENT
	03/17/2023	50% CONSTRUCTION DOCUMENTS
A	04/21/2023	COUNTY RESUBMITTAL
B	10/09/2024	CITY PLANNING RESUBMITTAL

DRAWINGS AND WRITTEN MATERIAL APPEARING HEREIN CONSTITUTE ORIGINAL AND UNPUBLISHED WORK OF SMS ARCHITECTS AND MAY NOT BE DUPLICATED, USED OR DISCLOSED WITHOUT WRITTEN CONSENT OF THE ARCHITECT

PROJECT NO. 22039
DATE JANUARY 25, 2023
DRAWING TITLE
ENLARGED RESTROOM PLAN
DRAWING NO.
A4.1.1

C:\Users\Brandd\Documents\22039_DPH_Building 12-Arch_brandd@sms-arch.com.rvt
10/8/2024 5:10:49 PM

CITY OF DANA POINT
PLANNING DIVISION

This plan has been reviewed for ZONING ONLY and meets the requirements of Title 9 of the Dana Point Municipal Code.

APPROVED KBN

DATE 10/21/24

COMMENTS BUILDING 12 (OC PERMIT PKG21-0516) PER CDP13-0018(I).

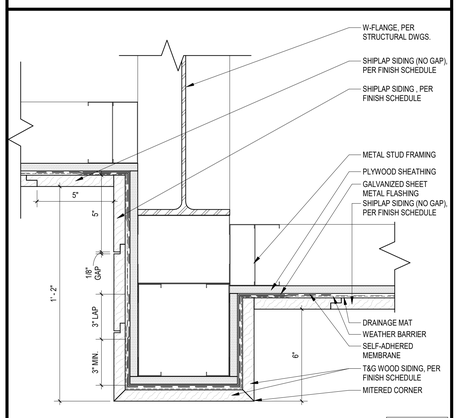

CEILING @ VESTIBULE WALL (T&G + SHIPLAP) 18
3" = 1'-0" A4.1.2 A4.1.2

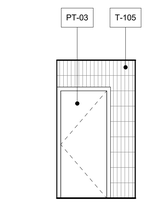

J

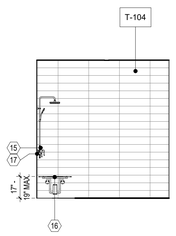

K

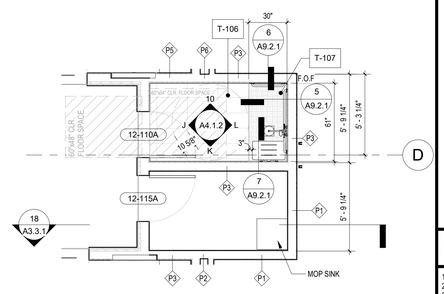

BOATER SERVICE SHOWER & JANITOR ROOM 5
1/4" = 1'-0" A2.0.1 A4.1.2

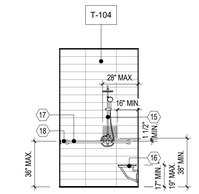

L

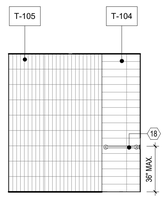

BOATER SERVICE SHOWER ELEVATION 10
1/4" = 1'-0" A4.1.2 A4.1.2

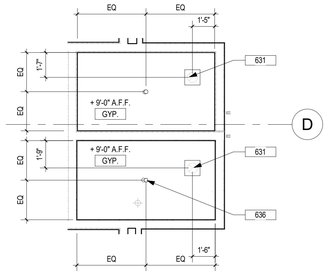

BOATER SERVICE SHOWER & JANITOR RCP 6
1/4" = 1'-0" A6.1.1 A4.1.2

SHOWER GENERAL NOTES

1. PROVIDE SHOWER ROOM DOOR SIGNAGE
2. PROVIDE BACKING PLATES FOR ALL EQUIPMENT AND FIXTURES.
3. SUBMIT FINAL LOCATION OF ALL ACCESS DOORS FOR APPROVAL.
4. LOCATE FLUSH VALVE SO THAT EXCESSIVE BODY MOVEMENT IS NOT REQUIRED.
5. MAXIMUM MOUNTING HEIGHT FOR ELECTRICAL SWITCHES AND OUTLETS 40 INCHES.
6. SEAL AROUND EDGES OF SHOWER ACCESSORIES.
7. PROVIDE U-SHAPED HANDLE BELOW LATCH ON BOTH SIDES OF WATER CLOSET COMPARTMENT DOOR.
8. FINISHES BY INTERIOR DESIGNER (UNLESS OTHERWISE NOTED).
9. PROVIDE LEVEL 5 FINISH IN RESTROOMS.

SHOWER ROOM ACCESSORY SCHEDULE

Keynote	Description	Manufacturer	Model
15	Neo Modern 3-Way Rain Shower Kits (ECO)	American Standard	Neo Modern 3-Way Rain Shower Kits (ECO)
16	Folding Shower / Dressing Area Seat	Bobrick Washroom Equipment, Inc.	B-5193
17	Straight Peened Grab Bar - 48"	Bobrick Washroom Equipment, Inc.	B-5806 99x48
18	Straight Grab Bar - 24"	Bobrick Washroom Equipment, Inc.	B-5806x24

FLOOR PLAN & REFLECTED CEILING PLAN KEYNOTES

272 HSS COLUMN REFER TO STRUCTURAL DRAWINGS FOR FURTHER INFORMATION -TYP.
283 5" HORIZONTAL SHIPLAP SIDING (1/8" GAP) - RUNNING BOND O/WEATHER BARRIER O/PLYWOOD SHEATHING BONDED TO CONTINUOUS R-10 RIGID INSULATION O/METAL STUDS W/R-19 BATT INSULATION
288 5" HORIZONTAL SHIPLAP SIDING (1/8" GAP) - RUNNING BOND O/ WEATHER BARRIER O/ PLYWOOD SHEATING BONDED TO CONTINUOUS R-10 RIGID INSULATION O/ METAL STUDS W/R-19 BATT INSULATION O/ 1" CORE BOARD
289 8" HORIZONTAL WOOD T&G (1/4" FINE LINE) SIDING - RUNNING BOND O/ WEATHER BARRIER O/ PLYWOOD SHEATHING O/ METAL STUDS O/ PLYWOOD SHEATING O/ WEATHER BARRIER O/ 5" HORIZONTAL SHIPLAP (1/8" GAP) - RUNNING BOND
292 EXTERIOR FLOOR FINISH REFER TO LANDSCAPE DRAWINGS FOR FURTHER INFORMATION - TYP.
631 EXHAUST FAN REFER TO MECHANICAL DRAWINGS FOR FURTHER INFORMATION - TYP.
633 SOFFIT VENT -TYP. SEE DETAIL 3/A8.5.2
636 LIGHT FIXTURE PER LIGHTING DWGS. - TYP

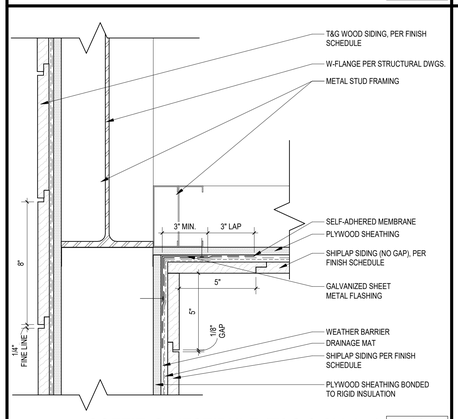

SOFFIT @ VESTIBULE (T&G & Shiplap) 19
3" = 1'-0" A4.1.2 A4.1.2

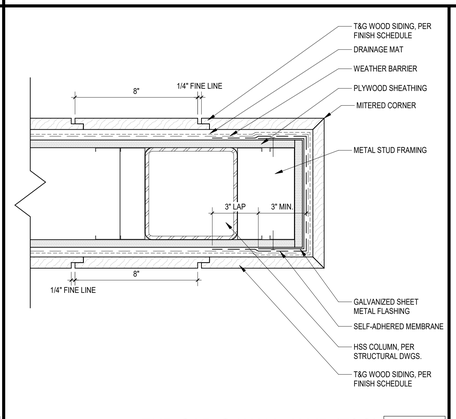

END CAP @ WALL JAMB (T&G) 15
3" = 1'-0" A4.1.2 A4.1.2

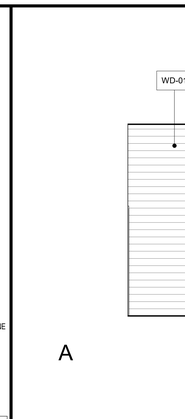

A

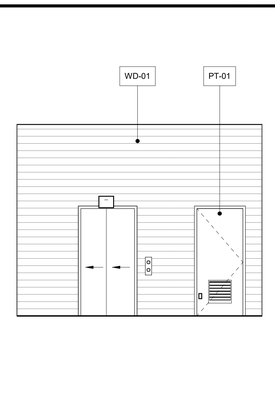

B

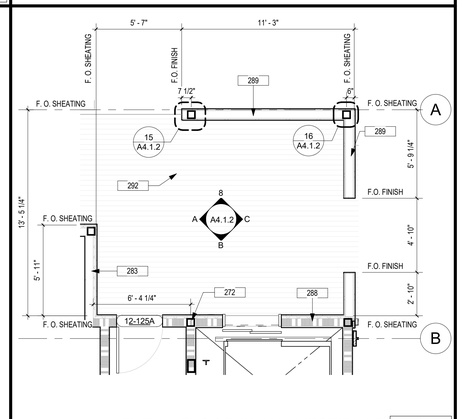

LEVEL 1 FLOOR PLAN - VESTIBULE 3
1/4" = 1'-0" A2.0.1 A4.1.2

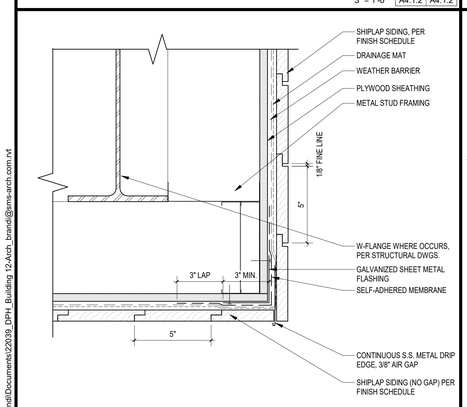

SOFFIT EDGE @ VESTIBULE (SHIPLAP) 20
3" = 1'-0" A4.1.2 A4.1.2

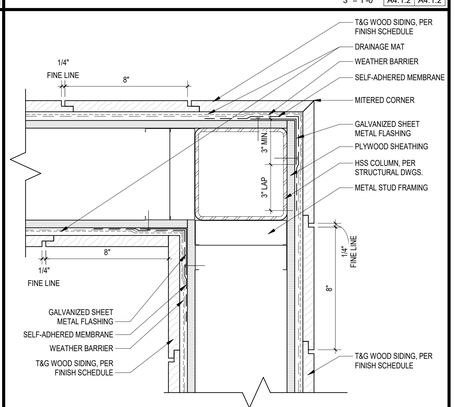

WALL CORNER @ T&G SIDING 16
3" = 1'-0" A4.1.2 A4.1.2

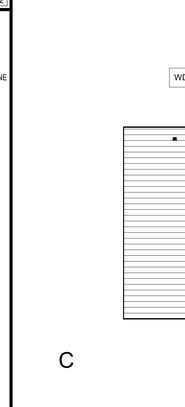

C

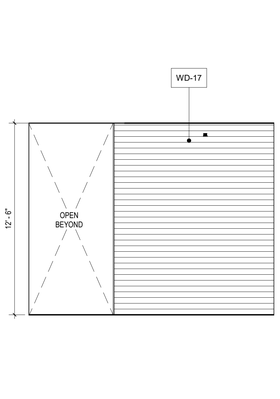

D

VESTIBULE ELEVATION D 8
1/4" = 1'-0" A4.1.2 A4.1.2

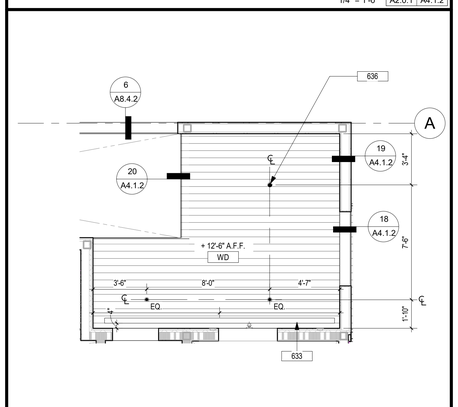

VESTIBULE REFLECTED CEILING PLAN 4
1/4" = 1'-0" A6.1.1 A4.1.2

Zoning: CanningK 11/13/2024

Building&Safety: OCPWAzarvandB 12/22/2025

Permits: BNR21-0246, ELE21-0853, MEC21-0514, PLB21-0900

County of Orange - OC Public Works
OC Development Services
APPROVED
This set of plans and specifications must be kept on the job at all times. It is unlawful to make any changes or alterations to these plans without written permission from OC Public Works, OC Development Services of Orange County. The stamping of these plan specifications SHALL NOT be held to permit or be an approval of the violation of any provisions of any County Ordinance or State law.
Hani Tahsbsaee
BUILDING OFFICIAL

SMS ARCHITECTS
100 Progress | Suite 250
Irvine, California 92618
949.757.3240 | www.sms-arch.com

CONSTANT

DANA POINT HARBOR PARTNERS

PROJECT NAME
DANA POINT HARBOR COMMERCIAL CORE
BUILDING 12
1290 HARBOR WAY
DANA POINT, CA 92629

CLIENT
BURNHAM | WARD PROPERTIES
BWP

LICENSED ARCHITECT
BRANDON DEDMON
No. C-37432
11.30.23
Exp. Date
STATE OF CALIFORNIA

No.	DATE	ISSUE
	9/30/2022	50% SCHEMATIC DESIGN
	10/28/2022	100% SCHEMATIC DESIGN
	02/10/2023	100% DESIGN DEVELOPMENT
	03/17/2023	50% CONSTRUCTION DOCUMENTS
A	04/21/2023	COUNTY RESUBMITTAL
B	10/09/2024	CITY PLANNING RESUBMITTAL

DRAWINGS AND WRITTEN MATERIAL APPEARING HEREIN CONSTITUTE ORIGINAL AND UNPUBLISHED WORK OF SMS ARCHITECTS AND MAY NOT BE DUPLICATED, USED OR DISCLOSED WITHOUT WRITTEN CONSENT OF THE ARCHITECT

PROJECT NO 22039

DATE JANUARY 25, 2023

DRAWING TITLE
ENLARGED PLANS

DRAWING NO.
A4.1.2

C:\Users\BrandD\Documents\22039_DPH_Building 12-Arch_brandd@sms-arch.com.rvt

10/8/2024 5:11:00 PM

FLOOR PLAN AND CEILING KEYNOTES

218 WOOD FRAME BI-FOLDING DOOR SYSTEM TO MATCH DURATHERM WITH LOW-E INSULATED GLAZING. REFERENCE SHEET A10.1.1 FOR DOOR SCHEDULE SIZING. PROVIDE TEMPERED GLASS WHEN BOTTOM EDGE OF GLAZING IS BELOW 18", HAS 9 SQUARE FEET OR GREATER AREA, IS WITHIN 60" ABOVE A WALKING PATH VERTICALLY, AND IS WITHIN 36" OF WALKING PATH HORIZONTALLY - TYP.

247 WOOD TIMBER COLUMN PER STRUCTURAL DRAWINGS - TYP.

262 WOOD STOREFRONT ASSEMBLY SYSTEM TO MATCH DURATHERM OR EQ. VERTICAL MULLIONS @ 36" O.C. TYP. WITH LOW-E INSULATED GLAZING. PROVIDE TEMPERED GLASS WHEN BOTTOM EDGE OF GLAZING IS BELOW 18", HAS 9 SQUARE FEET OR GREATER AREA, IS WITHIN 60" ABOVE A WALKING PATH VERTICALLY, AND IS WITHIN 36" OF WALKING PATH HORIZONTALLY - TYP.

269 W FLANGE COLUMN PER STRUCTURAL DRAWINGS. SPRAY-APPLIED FIREPROOFING ON ALL PRIMARY STRUCTURAL MEMBERS - TYP.

272 HSS COLUMN REFER TO STRUCTURAL DRAWINGS FOR FURTHER INFORMATION -TYP.

276 OPEN DECORATIVE HORIZONTAL SLAT WOOD SCREEN SYSTEM - TYP.

283 5" HORIZONTAL SHIPLAP SIDING (1/8" GAP) - RUNNING BOND OVHEATHER BARRIER O/PLYWOOD SHEATHING BONDED TO CONTINUOUS R-10 RIGID INSULATION O/METAL STUDS W/R-19 BATT INSULATION

291 DASHED LINE INDICATES ROOF TRELLIS ABOVE

292 EXTERIOR FLOOR FINISH REFER TO LANDSCAPE DRAWINGS FOR FURTHER INFORMATION - TYP.

636 LIGHT FIXTURE PER LIGHTING DWGS. - TYP

FLOOR PLAN GENERAL NOTES

01 REFER TO STRUCTURAL PLANS FOR FURTHER INFORMATION
02 REFER TO ELECTRICAL PLANS FOR FURTHER INFORMATION
03 REFER TO MECHANICAL PLANS FOR FURTHER INFORMATION
04 REFER TO PLUMBING PLANS FOR FURTHER INFORMATION
06 REFER TO FINISH PLAN AND SCHEDULE FOR INTERIOR WALL, CEILING AND FLOOR FINISH INFORMATION
07 DIMENSIONS ARE TO FACE OF FRAMING UNLESS SPECIFICALLY NOTED OTHERWISE
08 PROVIDE ADEQUATE BLOCKING IN WALLS FOR CABINETS AND OTHER WALL MOUNTED ACCESSORIES, INCLUDING BUT NOT LIMITED TO, HANDRAILS, SHELVING, AND BATHROOM FIXTURES
09 PROVIDE FIRE BLOCKING FOR WALL CAVITIES THAT EXCEED CBC HEIGHT LIMITATION
10 ALL CORRIDORS SHALL MAINTAIN A MINIMUM 44" CLEAR WIDTH THROUGHOUT THE TENANT SPACE AND ALL BUILDING EXITS, WHEN SERVING 50 OR MORE PERSONS
11 THE MAXIMUM OCCUPANCY LOAD SHALL BE POSTED IN EACH ASSEMBLY, DINING, AND/OR WAITING AREAS AS STATED ON PLANS.
12 PROVIDE FIRE EXTINGUISHERS (2-A-10-B.C.) THROUGHOUT. MINIMUM ONE (1) PER FLOOR, PER BUILDING WITH A MAXIMUM TRAVEL OF 75 FEET FROM ANY POINT TO A FIRE EXTINGUISHER
13 CONTRACTOR TO VERIFY ALL FIELD CONDITIONS PRIOR TO COMMENCEMENT OF WORK. ANY DISCREPANCIES IN THE FIELD AND DRAWINGS SHALL BE BROUGHT TO THE ATTENTION OF THE ARCHITECT OR OWNER PRIOR TO START OF WORK. ALL DIMENSIONS FROM EXISTING ELEMENTS ON THE DRAWINGS ARE APPROXIMATE AND SHALL BE VERIFIED IN THE FIELD
14 ALL DOOR OPENINGS ADJACENT TO A WALL SHALL RECEIVE A 4" OFFSET FROM THE ADJACENT WALL, UNLESS NOTED OTHERWISE
15 CONTRACTOR TO PROVIDE SMOOTH TRANSITION BETWEEN NEW AND EXISTING CONSTRUCTION. WHERE NEW CONSTRUCTION OCCURS, EXISTING SYSTEMS SHALL BE PROTECTED IN PLACE, EXTENDED AND FINISHED TO CREATE A COMPLETE SYSTEM AND SMOOTH TRANSITION TO NEW CONSTRUCTION
16 ALL NEW ROOF ASSEMBLIES TO BE CLASS "A"
17 REFER TO WALL TYPE SCHEDULES FOR FURTHER INFORMATION, SEE SHEET A9.1.1
18 PENETRATIONS OF FIRE-RESISTIVE WALLS, FLOOR-CEILING AND ROOF-CEILING SHALL BE PROTECTED AS REQUIRED IN CBC SECTION 714
19 STRUCTURAL ELEMENTS EXPOSED WITHIN WALLS, ARE REQUIRED TO HAVE THE SAME FIRE RESISTIVITY AS THE WALL AND FLOOR ASSEMBLIES
21 SIGNAGE REQUIREMENTS SHALL SATISFY SECTION. CBC 11B-216 AND CBC 11B-703.
22 IN BUILDINGS REQUIRED TO HAVE STANDPIPES, NOT LESS THAN ONE STANDPIPE SHALL BE PROVIDED FOR USE DURING CONSTRUCTION. STANDPIPES SHALL BE REVIEWED AND APPROVED PRIOR TO INSTALLATION
23 ALL FURNITURE AND EQUIPMENT IS BY OWNER AND IS SHOWN FOR COORDINATION PURPOSES ONLY.
24 PROVIDE ROOM IDENTIFICATION SIGN ON WALL ADJACENT TO ALL DOORS. REFER TO DETAIL 6/A9.9.1
25 FUTURE TENANT SPACES ARE DESIGNED FOR SHELL ONLY, NOT OCCUPANCY.
26 ALL EXTERIOR WOOD FINISHES SHALL BE LESS THAN TO BE 1" NOMINAL THICKNESS TO COMPLY WITH CBC 1404.5
27 FIRE-RETARDANT-TREATED WOOD MUST BE USED WHENEVER WOOD IS DETAILED, INCLUDING FRAMING AND PLYWOOD SHEATHING, TO COMPLY WITH CBC 603.1
28 ALL ELEMENTS OF THE BUILDING SHALL COMPLY WITH SECTION 602.2 AND 603 OF THE 2019 CBC FOR ALLOWABLE CONSTRUCTION MATERIALS.
29 ALL LIGHTING IS TO BE DESIGNED AND LOCATED SO THAT LIGHT RAYS ARE AIMED DOWNWARD ONTO THE SITE THAT IS ATTACHED TO THE WATER-FACING ELEVATION OF THE BUILDING PER SECTION 5.5 P OF THE DANA POINT HARBOR DISTRICT REGULATION.

CEILING PLAN GENERAL NOTES

1. CONCEALED SPRINKLER HEADS TO BE USED IN ALL PUBLIC LOCATIONS.
2. SEMI RECESSED SPRINKLERS TO BE USED IN ACOUSTICAL TILE CEILINGS.
3. FOR LIGHTING FIXTURE DESCRIPTION AND SPECIFICATIONS SEE ELECTRICAL PLANS.

CITY OF DANA POINT
PLANNING DIVISION

This plan has been reviewed for ZONING ONLY and meets the requirements of Title 9 of the Dana Point Municipal Code.

APPROVED KBN

DATE 10/21/24

COMMENTS BUILDING 12 (CC PERMIT PKG21-0516) PER CDP13-0018(I).

Zoning: CanningK **11/13/2024**

Building&Safety: OCPWAzarvandB **12/22/2025**

Permits: BNR21-0246, ELE21-0853, MEC21-0514, PLB21-0900

County of Orange - OC Public Works
OC Development Services
APPROVED

This set of plans and specifications must be kept on the job at all times. It is unlawful to make any changes or alterations to these plans without written permission from OC Public Works, OC Development Services of Orange County. The stamping of these plan specifications SHALL NOT be held to permit or be an approval of the violation of any provisions of any County Ordinance or State law.

Hind Tshetshasra
BUILDING OFFICIAL

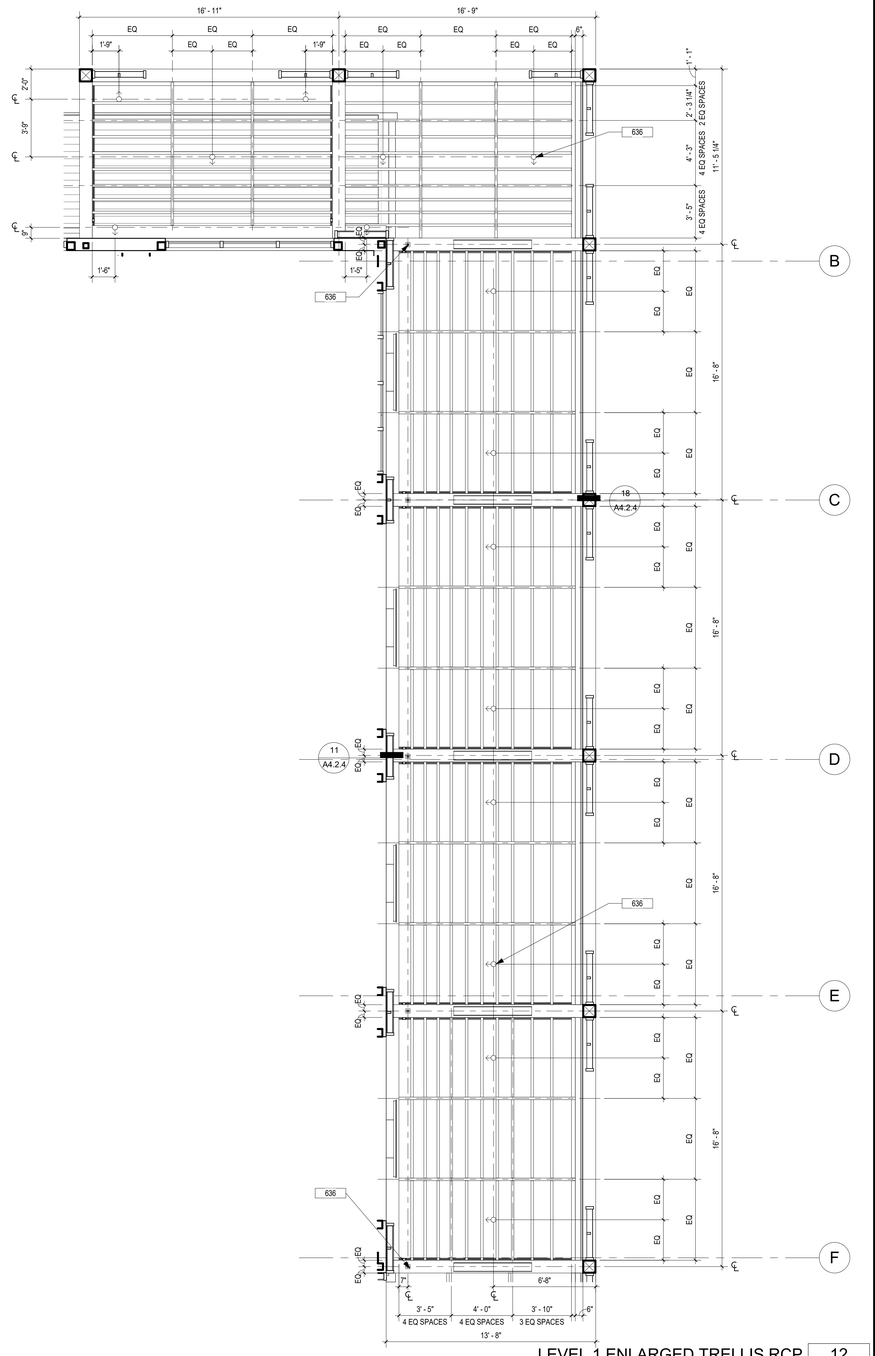

LEVEL 1 ENLARGED TRELLIS RCP 12
1/4" = 1'-0" A6.1.1 A4.2.1

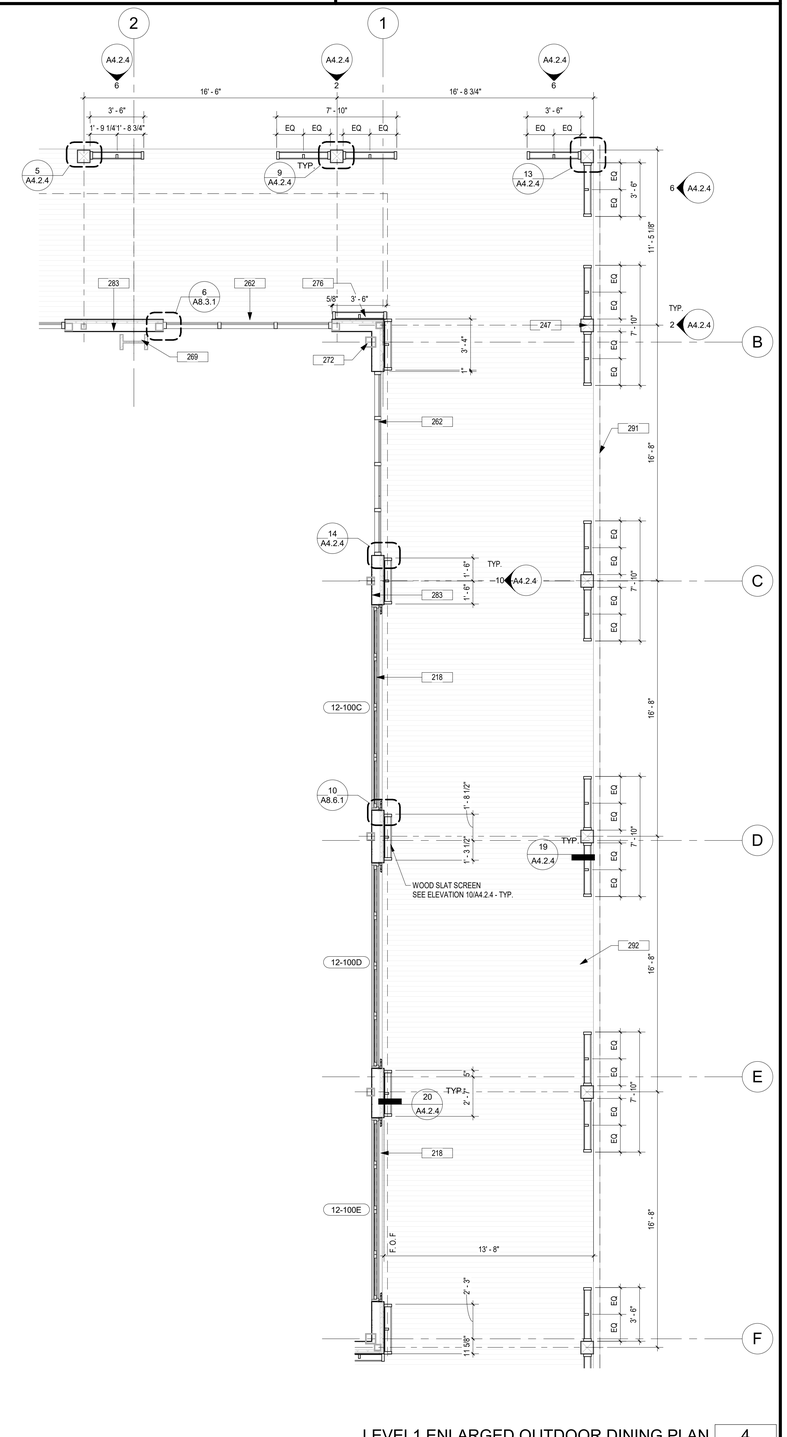

LEVEL1 ENLARGED OUTDOOR DINING PLAN 4
1/4" = 1'-0" A2.0.1 A4.2.1

SMS ARCHITECTS
100 Progress | Suite 250
Irvine, California 92618
949.757.3240 | www.sms-arch.com

CONSTANT

DANA POINT HARBOR PARTNERS

PROJECT NAME
DANA POINT HARBOR COMMERCIAL CORE
BUILDING 12
1290 HARBOR WAY
DANA POINT, CA 92629

CLIENT
BWP PROPERTIES | BURNHAM | WARD

LICENSED ARCHITECT
BRANDON DEDMAN
No. C-37432
11.30.23
Exp. Date
STATE OF CALIFORNIA

No.	DATE	ISSUE
	9/30/2022	50% SCHEMATIC DESIGN
	10/28/2022	100% SCHEMATIC DESIGN
	02/10/2023	100% DESIGN DEVELOPMENT
	03/17/2023	50% CONSTRUCTION DOCUMENTS
A	04/21/2023	COUNTY RESUBMITTAL
B	10/09/2024	CITY PLANNING RESUBMITTAL

DRAWINGS AND WRITTEN MATERIAL APPEARING HEREIN CONSTITUTE ORIGINAL AND UNPUBLISHED WORK OF SMS ARCHITECTS AND MAY NOT BE DUPLICATED, USED OR DISCLOSED WITHOUT WRITTEN CONSENT OF THE ARCHITECT

PROJECT NO. 22039
DATE JANUARY 25, 2023

DRAWING TITLE
LEVEL 1 - ENLARGED TRELLIS FLOOR PLAN AND RCP

DRAWING NO.
A4.2.1

C:\Users\Brandi\Documents\22039_DPH_Building 12-Arch_brandi@sms-arch.com.rvt

10/8/2024 5:11:06 PM

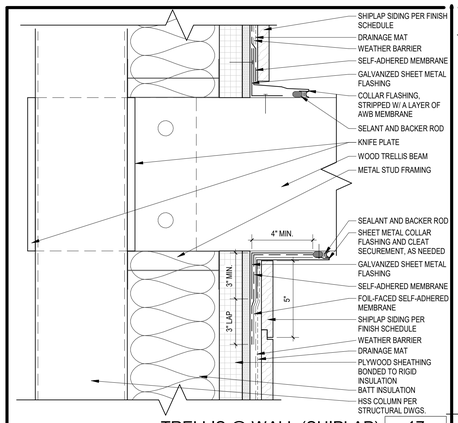

TRELLIS @ WALL (SHIPLAP) | 17 | A4.2.2 | A4.2.2
3" = 1'-0"

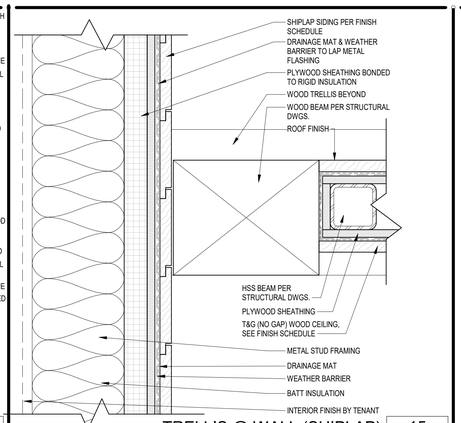

TRELLIS @ WALL (SHIPLAP) | 15 | A4.2.2
3" = 1'-0"

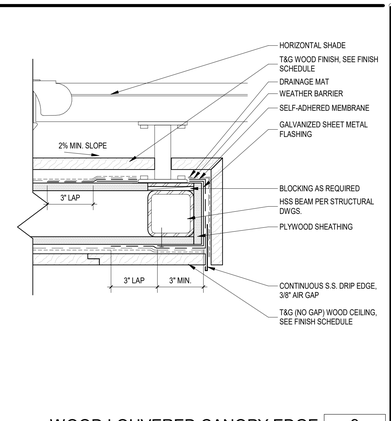

WOOD LOUVERED CANOPY EDGE | 9 | A3.3.1 | A4.2.2
3" = 1'-0"

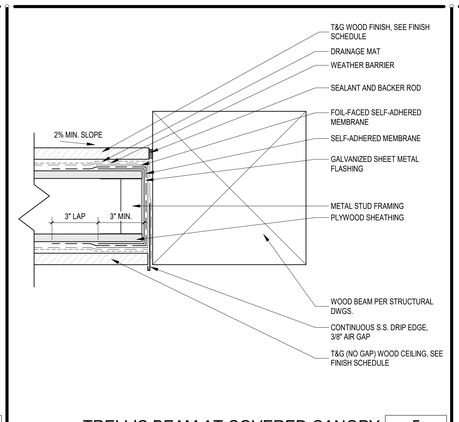

TRELLIS BEAM AT COVERED CANOPY | 5 | A4.2.2 | A4.2.2
3" = 1'-0"

Zoning: CanningK 11/13/2024

Building&Safety: OCPWAzarvandB 12/22/2025

Permits: BNR21-0246, ELE21-0853, MEC21-0514, PLB21-0900

County of Orange - OC Public Works
OC Development Services
APPROVED
This set of plans and specifications must be kept on the job at all times. It is unlawful to make any changes or alterations to these plans without written permission from OC Public Works/ OC Development Services of Orange County. The stamping of these plan specifications SHALL NOT be held to permit or be an approval of the violation of any provisions of any County Ordinance or State law.
Hani Tahsbsaee
BUILDING OFFICIAL

CITY OF DANA POINT
PLANNING DIVISION
This plan has been reviewed for ZONING ONLY and meets the requirements of Title 9 of the Dana Point Municipal Code.
APPROVED KBN
DATE 10/21/24
COMMENTS BUILDING 12 (OC PERMIT PKG21-09516) PER CDP13-0018(I).

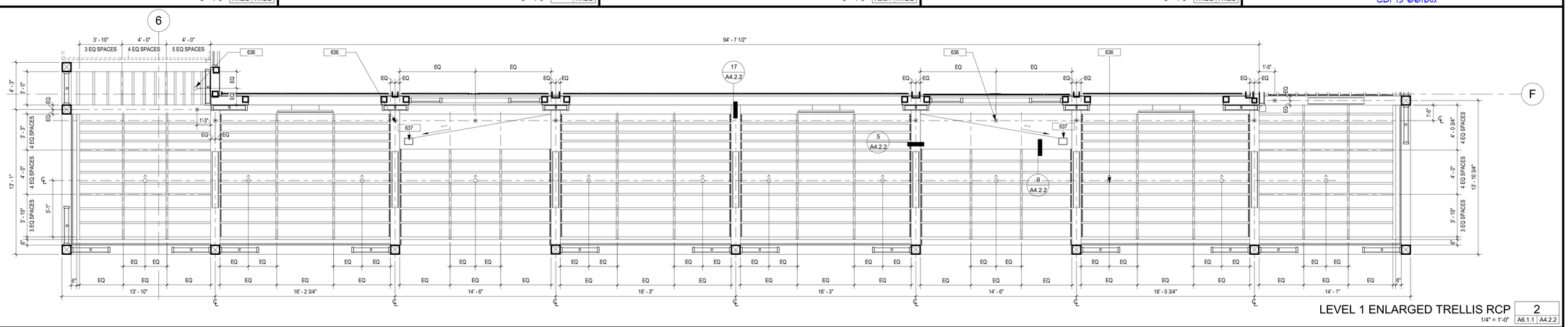

LEVEL 1 ENLARGED TRELLIS RCP | 2 | A6.1.1 | A4.2.2
1/4" = 1'-0"

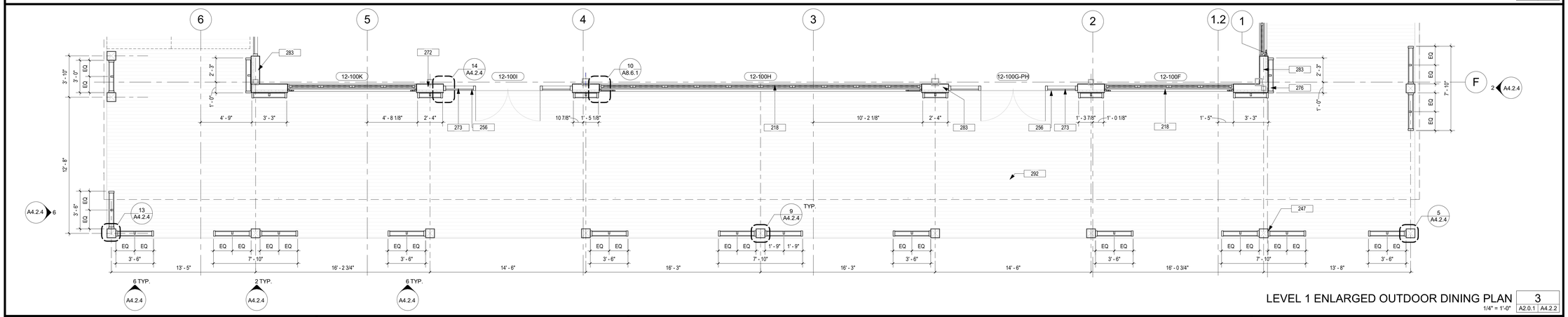

LEVEL 1 ENLARGED OUTDOOR DINING PLAN | 3 | A2.0.1 | A4.2.2
1/4" = 1'-0"

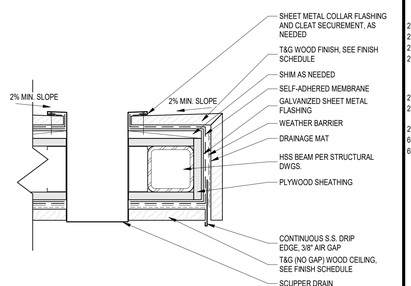

SCUPPER DRAIN AT WOOD CANOPY | 20 | A4.2.2
3" = 1'-0"

FLOOR PLAN AND CEILING KEYNOTES

218 WOOD FRAME BI-FOLDING DOOR SYSTEM TO MATCH DURATHERM WITH LOW-E INSULATED GLAZING. REFERENCE SHEET A10.1.1 FOR DOOR SCHEDULE SIZING. PROVIDE TEMPERED GLASS WHEN BOTTOM EDGE OF GLAZING IS BELOW 18", HAS 9 SQUARE FEET OR GREATER AREA, IS WITHIN 60" ABOVE A WALKING PATH VERTICALLY, AND IS WITHIN 36" OF WALKING PATH HORIZONTALLY - TYP.
247 WOOD TIMBER COLUMN PER STRUCTURAL DRAWINGS - TYP.
256 PROVIDE TACTILE EXIT SIGN TO EXIT. SEE DETAIL 6/A9.9.1
272 HSS COLUMN REFER TO STRUCTURAL DRAWINGS FOR FURTHER INFORMATION -TYP.
273 WOOD STOREFRONT DOOR ASSEMBLY TO MATCH DURATHERM OR EQ. WITH LOW-E INSULATED GLAZING. REFERENCE SHEET A10.1.1 FOR DOOR SCHEDULE SIZING. PROVIDE TEMPERED GLASS WHEN BOTTOM EDGE OF GLAZING IS BELOW 18", HAS 9 SQUARE FEET OR GREATER AREA, IS WITHIN 60" ABOVE A WALKING PATH VERTICALLY, AND IS WITHIN 36" OF WALKING PATH HORIZONTALLY - TYP.
276 OPEN DECORATIVE HORIZONTAL SLAT WOOD SCREEN SYSTEM - TYP.
283 5" HORIZONTAL SHIPLAP SIDING (1/8" GAP) - RUNNING BOND O/WEATHER BARRIER O/PLYWOOD SHEATHING BONDED TO CONTINUOUS R-10 RIGID INSULATION O/METAL STUDS W/R-19 BATT INSULATION
292 EXTERIOR FLOOR FINISH REFER TO LANDSCAPE DRAWINGS FOR FURTHER INFORMATION - TYP.
636 LIGHT FIXTURE PER LIGHTING DWGS. - TYP
637 SCUPPER DRAIN SEE DETAIL 20/A4.2.2

FLOOR PLAN GENERAL NOTES

01 REFER TO STRUCTURAL PLANS FOR FURTHER INFORMATION
02 REFER TO ELECTRICAL PLANS FOR FURTHER INFORMATION
03 REFER TO MECHANICAL PLANS FOR FURTHER INFORMATION
04 REFER TO PLUMBING PLANS FOR FURTHER INFORMATION
06 REFER TO FINISH PLAN AND SCHEDULE FOR INTERIOR WALL, CEILING AND FLOOR FINISH INFORMATION
07 DIMENSIONS ARE TO FACE OF FRAMING UNLESS SPECIFICALLY NOTED OTHERWISE
08 PROVIDE ADEQUATE BLOCKING IN WALLS FOR CABINETS AND OTHER WALL MOUNTED ACCESSORIES, INCLUDING BUT NOT LIMITED TO, HANDRAILS, SHELVING, AND BATHROOM FIXTURES
09 PROVIDE FIRE BLOCKING FOR WALL CAVITIES THAT EXCEED CBC HEIGHT LIMITATION
10 ALL CORRIDORS SHALL MAINTAIN A MINIMUM 44" CLEAR WIDTH THROUGHOUT THE TENANT SPACE AND ALL BUILDING EXITS, WHEN SERVING 50 OR MORE PERSONS
11 THE MAXIMUM OCCUPANCY LOAD SHALL BE POSTED IN EACH ASSEMBLY, DINING, AND/OR WAITING AREAS AS STATED ON PLANS.
12 PROVIDE FIRE EXTINGUISHERS (2-A-10-B.C.) THROUGHOUT. MINIMUM ONE (1) PER FLOOR, PER BUILDING WITH A MAXIMUM TRAVEL OF 75 FEET FROM ANY POINT TO A FIRE EXTINGUISHER
13 CONTRACTOR TO VERIFY ALL FIELD CONDITIONS PRIOR TO COMMENCEMENT OF WORK. ANY DISCREPANCIES IN THE FIELD AND DRAWINGS SHALL BE BROUGHT TO THE ATTENTION OF THE ARCHITECT OR OWNER PRIOR TO START OF WORK. ALL DIMENSIONS FROM EXISTING ELEMENTS ON THE DRAWINGS ARE APPROXIMATE AND SHALL BE VERIFIED IN THE FIELD
14 ALL DOOR OPENINGS ADJACENT TO A WALL SHALL RECEIVE A 4" OFFSET FROM THE ADJACENT WALL, UNLESS NOTED OTHERWISE
15 CONTRACTOR TO PROVIDE SMOOTH TRANSITION BETWEEN NEW AND EXISTING CONSTRUCTION. WHERE NEW CONSTRUCTION OCCURS, EXISTING SYSTEMS SHALL BE PROTECTED IN PLACE, EXTENDED AND FINISHED TO CREATE A COMPLETE SYSTEM AND SMOOTH TRANSITION TO NEW CONSTRUCTION
16 ALL NEW ROOF ASSEMBLIES TO BE CLASS "A"
17 REFER TO WALL TYPE SCHEDULES FOR FURTHER INFORMATION. SEE SHEET A9.1.1
18 PENETRATIONS OF FIRE-RESISTIVE WALLS, FLOOR-CEILING AND ROOF-CEILING SHALL BE PROTECTED AS REQUIRED IN CBC SECTION 714
19 STRUCTURAL ELEMENTS EXPOSED WITHIN WALLS, ARE REQUIRED TO HAVE THE SAME FIRE RESISTIVITY AS THE WALL AND FLOOR ASSEMBLIES
21 SIGNAGE REQUIREMENTS SHALL SATISFY SECTION. CBC 11B-216 AND CBC 11B-703.
22 IN BUILDINGS REQUIRED TO HAVE STANDPIPES, NOT LESS THAN ONE STANDPIPE SHALL BE PROVIDED FOR USE DURING CONSTRUCTION. STANDPIPES SHALL BE REVIEWED AND APPROVED PRIOR TO INSTALLATION
23 ALL FURNITURE AND EQUIPMENT IS BY OWNER AND IS SHOWN FOR COORDINATION PURPOSES ONLY.
24 PROVIDE ROOM IDENTIFICATION SIGN ON WALL ADJACENT TO ALL DOORS. REFER TO DETAIL 6/A9.9.1
25 FUTURE TENANT SPACES ARE DESIGNED FOR SHELL ONLY, NOT OCCUPANCY.
26 ALL EXTERIOR WOOD FINISHES SHALL BE LESS THAN TO BE 1" NOMINAL THICKNESS TO COMPLY WITH CBC 1404.5
27 FIRE-RETARDANT-TREATED WOOD MUST BE USED WHENEVER WOOD IS DETAILED, INCLUDING FRAMING AND PLYWOOD SHEATHING, TO COMPLY WITH CBC 603.1
28 ALL ELEMENTS OF THE BUILDING SHALL COMPLY WITH SECTION 602.2 AND 603 OF THE 2019 CBC FOR ALLOWABLE CONSTRUCTION MATERIALS
29 ALL LIGHTING IS TO BE DESIGNED AND LOCATED SO THAT LIGHT RAYS ARE AIMED DOWNWARD ONTO THE SITE THAT IS ATTACHED TO THE WATER-FACING ELEVATION OF THE BUILDING PER SECTION 5.5 P OF THE DANA POINT HARBOR DISTRICT REGULATION.

CEILING PLAN GENERAL NOTES

1. CONCEALED SPRINKLER HEADS TO BE USED IN ALL PUBLIC LOCATIONS.
2. SEMI RECESSED SPRINKLERS TO BE USED IN ACOUSTICAL TILE CEILINGS.
3. FOR LIGHTING FIXTURE DESCRIPTION AND SPECIFICATIONS SEE ELECTRICAL PLANS.

SMS ARCHITECTS
100 Progress | Suite 250
Irvine, California 92618
949.757.3240 | www.sms-arch.com

CONSTANT

DANA POINT HARBOR PARTNERS

PROJECT NAME
DANA POINT HARBOR COMMERCIAL CORE
BUILDING 12
1290 HARBOR WAY
DANA POINT, CA 92629

CLIENT
BWP PROPERTIES
BURNHAM|WARD

LICENSED ARCHITECT
BRANDON DEDMON
No. C-37432
11.30.23
Exp. Date
STATE OF CALIFORNIA

No.	DATE	ISSUE
	02/10/2023	100% DESIGN DEVELOPMENT
	03/17/2023	50% CONSTRUCTION DOCUMENTS
A	04/21/2023	COUNTY RESUBMITTAL
B	10/09/2024	CITY PLANNING RESUBMITTAL

DRAWINGS AND WRITTEN MATERIAL APPEARING HEREIN CONSTITUTE ORIGINAL AND UNPUBLISHED WORK OF SMS ARCHITECTS AND MAY NOT BE DUPLICATED, USED OR DISCLOSED WITHOUT WRITTEN CONSENT OF THE ARCHITECT

PROJECT NO 22039
DATE JANUARY 25, 2023
DRAWING TITLE
LEVEL 1 - ENLARGED TRELLIS FLOOR PLAN AND RCP
DRAWING NO.
A4.2.2

C:\Users\Brandi\Documents\22039_DPH_Building 12-Arch_brandi@sms-arch.com.rvt

10/8/2024 5:11:13 PM

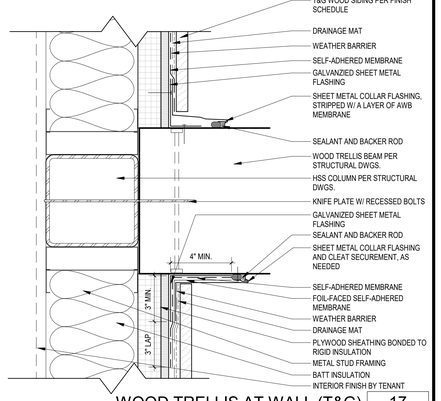

WOOD TRELLIS AT WALL (T&G) 17
3" = 1'-0" A4.2.3 A4.2.3

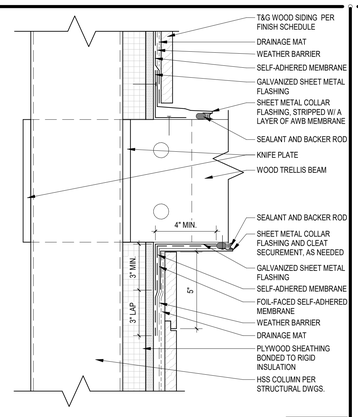

WOOD TRELLIS @ WALL (T&G) 13
3" = 1'-0" A4.2.3 A4.2.3

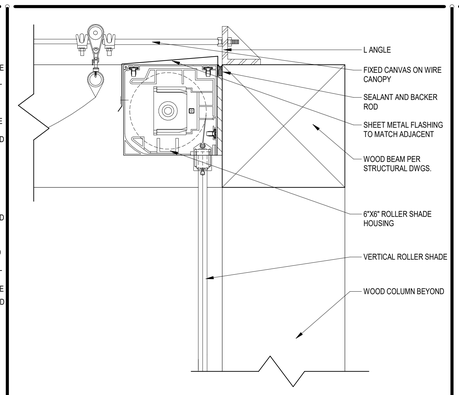

WIRE CANOPY AT WOOD TRELLIS 9
3" = 1'-0" A3.3.1 A4.2.3

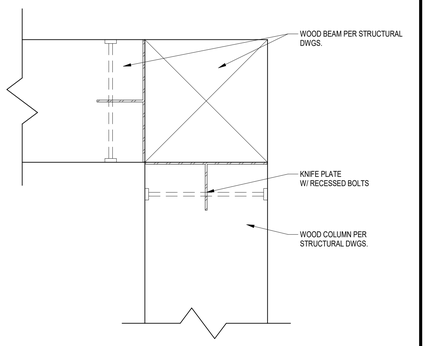

WOOD TRELLIS CORNER CONNECTION 5
3" = 1'-0" A4.2.3 A4.2.3

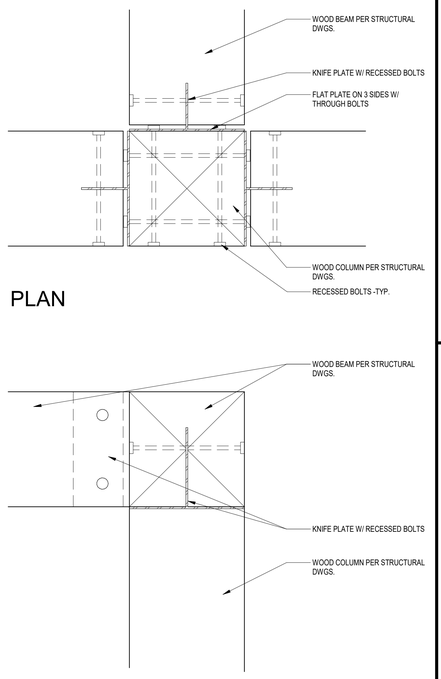

PLAN

SECTION

WOOD-BEAM-TO-WOOD BEAM CONNECTION 19
3" = 1'-0" A4.2.3 A4.2.3

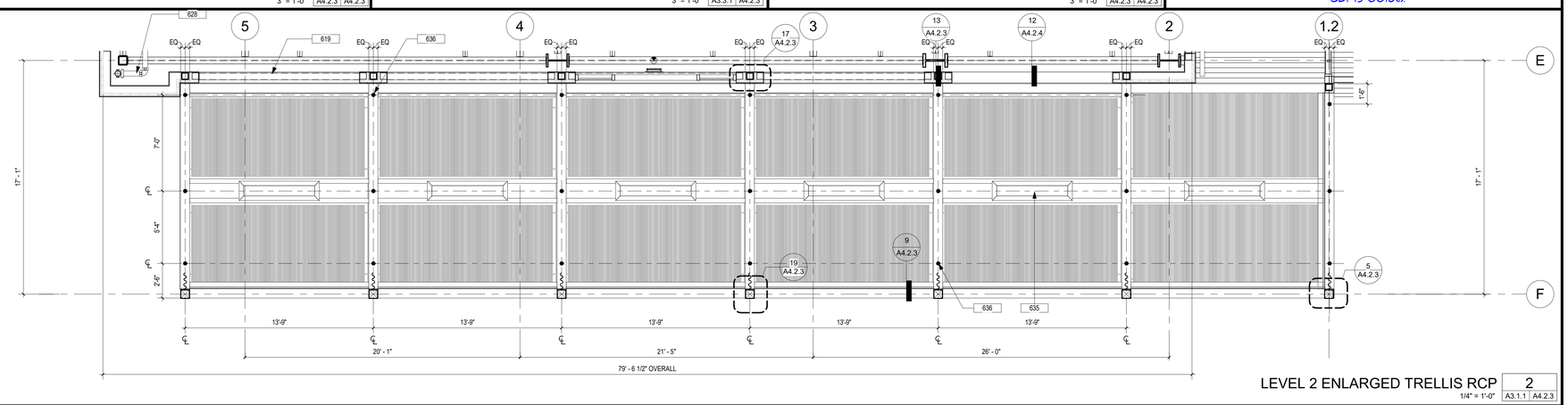

LEVEL 2 ENLARGED TRELLIS RCP 2
1/4" = 1'-0" A3.1.1 A4.2.3

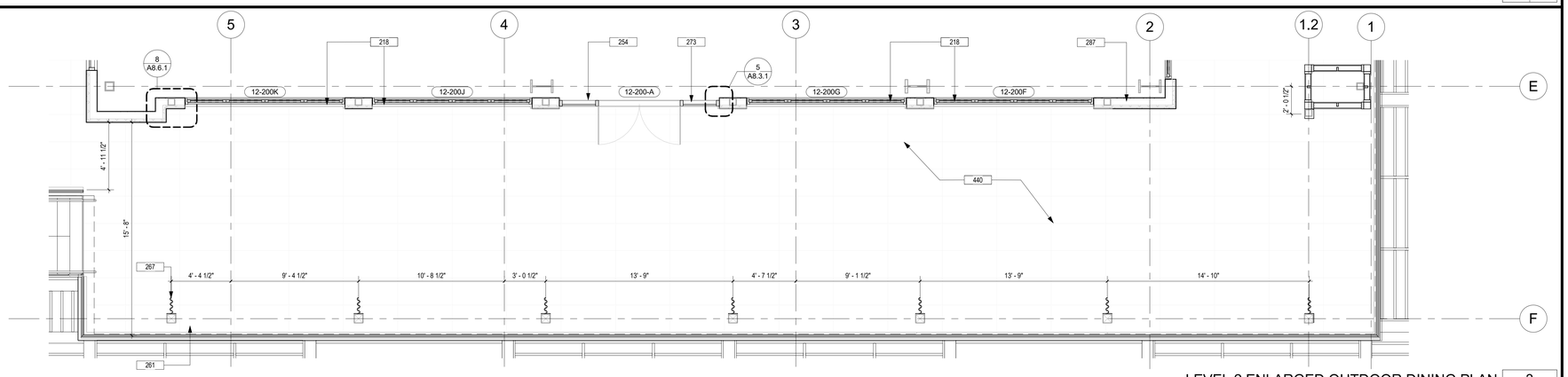

LEVEL 2 ENLARGED OUTDOOR DINING PLAN 3
1/4" = 1'-0" A2.0.2 A4.2.3

FLOOR PLAN AND CEILING KEYNOTES

218 WOOD FRAME BI-FOLDING DOOR SYSTEM TO MATCH DURATHERM WITH LOW-E INSULATED GLAZING. REFERENCE SHEET A10.1.1 FOR DOOR SCHEDULE SIZING. PROVIDE TEMPERED GLASS WHEN BOTTOM EDGE OF GLAZING IS BELOW 18", HAS 9 SQUARE FEET OR GREATER AREA, IS WITHIN 60" ABOVE A WALKING PATH VERTICALLY, AND IS WITHIN 36" OF WALKING PATH HORIZONTALLY - TYP.

254 PROVIDE TACTILE EXIT SIGN TO EXIT ROUTE. SEE DETAIL 6/A9.9.1

261 FABRIC SUN SHADE ON SLIDERS MOUNTED TO TRELLIS - TYP.

267 CABANA FABRIC PER FINISH SCHEDULE

269 W FLANGE COLUMN PER STRUCTURAL DRAWINGS. SPRAY-APPLIED FIREPROOFING ON ALL PRIMARY STRUCTURAL MEMBERS - TYP.

273 WOOD STOREFRONT DOOR ASSEMBLY TO MATCH DURATHERM OR EQ. WITH LOW-E INSULATED GLAZING. REFERENCE SHEET A10.1.1 FOR DOOR SCHEDULE SIZING. PROVIDE TEMPERED GLASS WHEN BOTTOM EDGE OF GLAZING IS BELOW 18", HAS 9 SQUARE FEET OR GREATER AREA, IS WITHIN 60" ABOVE A WALKING PATH VERTICALLY, AND IS WITHIN 36" OF WALKING PATH HORIZONTALLY - TYP.

287 8" HORIZONTAL WOOD T&G (1/4" FINE LINE) SIDING - RUNNING BOND O/ WEATHER BARRIER O/ PLYWOOD SHEATHING BONDED TO CONTINUOUS R-10 RIGID INSULATION O/ METAL STUDS W/ R-19 BATT INSULATION

440 CERAMIC TILE O/ ADJUSTABLE PEDESTAL O/ PVC MEMBRANE W/ EVFM O/ DENSDECK O/ TAPERED INSULATION SLOPED TO DRAIN O/ CONCRETE METAL DECK.

619 FIRE SPRINKLER LINE; SEE FIRE PROTECTION DWGS.

628 SANITARY LINE REFER TO PLUMBING DRAWINGS FOR FURTHER INFORMATION - TYP.

629 STRUCTURAL BEAMS REFER TO STRUCTURAL DRAWINGS FOR FURTHER INFORMATION - TYP.

632 SINGLE LINE DIAGRAM REFER TO ELECTRICAL DRAWINGS FOR FURTHER INFORMATION - TYP.

635 RECESSED HEATER -TYP.

636 LIGHT FIXTURE PER LIGHTING DWGS. - TYP

FLOOR PLAN GENERAL NOTES

01 REFER TO STRUCTURAL PLANS FOR FURTHER INFORMATION
02 REFER TO ELECTRICAL PLANS FOR FURTHER INFORMATION
03 REFER TO MECHANICAL PLANS FOR FURTHER INFORMATION
04 REFER TO PLUMBING PLANS FOR FURTHER INFORMATION
06 REFER TO FINISH PLAN AND SCHEDULE FOR INTERIOR WALL, CEILING AND FLOOR FINISH INFORMATION
07 DIMENSIONS ARE TO FACE OF FRAMING UNLESS SPECIFICALLY NOTED OTHERWISE
08 PROVIDE ADEQUATE BLOCKING IN WALLS FOR CABINETS AND OTHER WALL MOUNTED ACCESSORIES, INCLUDING BUT NOT LIMITED TO, HANDRAILS, SHELVING, AND BATHROOM FIXTURES
09 PROVIDE FIRE BLOCKING FOR WALL CAVITIES THAT EXCEED CBC HEIGHT LIMITATION
10 ALL CORRIDORS SHALL MAINTAIN A MINIMUM 44" CLEAR WIDTH THROUGHOUT THE TENANT SPACE AND ALL BUILDING EXITS, WHEN SERVING 50 OR MORE PERSONS
11 THE MAXIMUM OCCUPANCY LOAD SHALL BE POSTED IN EACH ASSEMBLY, DINING, AND/OR WAITING AREAS AS STATED ON PLANS.
12 PROVIDE FIRE EXTINGUISHERS (2-A-10-B.C.) THROUGHOUT. MINIMUM ONE (1) PER FLOOR, PER BUILDING WITH A MAXIMUM TRAVEL OF 75 FEET FROM ANY POINT TO A FIRE EXTINGUISHER
13 CONTRACTOR TO VERIFY ALL FIELD CONDITIONS PRIOR TO COMMENCEMENT OF WORK. ANY DISCREPANCIES IN THE FIELD AND DRAWINGS SHALL BE BROUGHT TO THE ATTENTION OF THE ARCHITECT OR OWNER PRIOR TO START OF WORK. ALL DIMENSIONS FROM EXISTING ELEMENTS ON THE DRAWINGS ARE APPROXIMATE AND SHALL BE VERIFIED IN THE FIELD
14 ALL DOOR OPENINGS ADJACENT TO A WALL SHALL RECEIVE A 4" OFFSET FROM THE ADJACENT WALL, UNLESS NOTED OTHERWISE
15 CONTRACTOR TO PROVIDE SMOOTH TRANSITION BETWEEN NEW AND EXISTING CONSTRUCTION. WHERE NEW CONSTRUCTION OCCURS, EXISTING SYSTEMS SHALL BE PROTECTED IN PLACE, EXTENDED AND FINISHED TO CREATE A COMPLETE SYSTEM AND SMOOTH TRANSITION TO NEW CONSTRUCTION
16 ALL NEW ROOF ASSEMBLIES TO BE CLASS "A"
17 REFER TO WALL TYPE SCHEDULES FOR FURTHER INFORMATION. SEE SHEET A9.1.1
18 PENETRATIONS OF FIRE-RESISTIVE WALLS, FLOOR-CEILING AND ROOF-CEILING SHALL BE PROTECTED AS REQUIRED IN CBC SECTION 714
19 STRUCTURAL ELEMENTS EXPOSED WITHIN WALLS, ARE REQUIRED TO HAVE THE SAME FIRE RESISTIVITY AS THE WALL AND FLOOR ASSEMBLIES
21 SIGNAGE REQUIREMENTS SHALL SATISFY SECTION. CBC 11B-216 AND CBC 11B-703.
22 IN BUILDINGS REQUIRED TO HAVE STANDPIPES, NOT LESS THAN ONE STANDPIPE SHALL BE PROVIDED FOR USE DURING CONSTRUCTION. STANDPIPES SHALL BE REVIEWED AND APPROVED PRIOR TO INSTALLATION
23 ALL FURNITURE AND EQUIPMENT IS BY OWNER AND IS SHOWN FOR COORDINATION PURPOSES ONLY.
24 PROVIDE ROOM IDENTIFICATION SIGN ON WALL ADJACENT TO ALL DOORS. REFER TO DETAIL 6/A9.9.1
25 FUTURE TENANT SPACES ARE DESIGNED FOR SHELL ONLY, NOT OCCUPANCY.
26 ALL EXTERIOR WOOD FINISHES SHALL BE LESS THAN TO BE 1" NOMINAL THICKNESS TO COMPLY WITH CBC 1404.5
27 FIRE-RETARDANT-TREATED WOOD MUST BE USED WHENEVER WOOD IS DETAILED, INCLUDING FRAMING AND PLYWOOD SHEATHING, TO COMPLY WITH CBC 603.1
28 ALL ELEMENTS OF THE BUILDING SHALL COMPLY WITH SECTION 602.2 AND 603 OF THE 2019 CBC FOR ALLOWABLE CONSTRUCTION MATERIALS.
29 ALL LIGHTING IS TO BE DESIGNED AND LOCATED SO THAT LIGHT RAYS ARE AIMED DOWNWARD ONTO THE SITE THAT IS ATTACHED TO THE WATER-FACING ELEVATION OF THE BUILDING PER SECTION 5.5 P OF THE DANA POINT HARBOR DISTRICT REGULATION.

CEILING PLAN GENERAL NOTES

1. CONCEALED SPRINKLER HEADS TO BE USED IN ALL PUBLIC LOCATIONS.
2. SEMI RECESSED SPRINKLERS TO BE USED IN ACOUSTICAL TILE CEILINGS.
3. FOR LIGHTING FIXTURE DESCRIPTION AND SPECIFICATIONS SEE ELECTRICAL PLANS.

Zoning: CanningK 11/13/2024

Building&Safety: OCPWAzarvandB 12/22/2025

Permits: BNR21-0246, ELE21-0853, MEC21-0514, PLB21-0900

County of Orange - OC Public Works
OC Development Services
APPROVED
This set of plans and specifications must be kept on the job at all times. It is unlawful to make any changes or alterations to these plans without written permission from OC Public Works, OC Development Services of Orange County. The stamping of these plan specifications SHALL NOT be held to permit or be an approval of the violation of any provisions of any County Ordinance or State law.
Hind Tshetshasee
BUILDING OFFICIAL

CITY OF DANA POINT
PLANNING DIVISION
This plan has been reviewed for ZONING ONLY and meets the requirements of Title 9 of the Dana Point Municipal Code.
APPROVED KBN
DATE 10/21/24
COMMENTS BUILDING 12 (OC PERMIT PKG21-0516) PER CDP13-0018(I).

SMS ARCHITECTS
100 Progress | Suite 250
Irvine, California 92618
949.757.3240 | www.sms-arch.com

CONSTANT

DANA POINT HARBOR PARTNERS

PROJECT NAME
DANA POINT HARBOR COMMERCIAL CORE
BUILDING 12
1290 HARBOR WAY
DANA POINT, CA 92629

CLIENT
BURNHAM | WARD PROPERTIES
BWP

LICENSED ARCHITECT
BANDON DEDMON
No. C-37432
11.30.23
Exp. Date
STATE OF CALIFORNIA

No.	DATE	ISSUE
A	04/21/2023	COUNTY RESUBMITTAL
B	10/09/2024	CITY PLANNING RESUBMITTAL

DRAWINGS AND WRITTEN MATERIAL APPEARING HEREIN CONSTITUTE ORIGINAL AND UNPUBLISHED WORK OF SMS ARCHITECTS AND MAY NOT BE DUPLICATED, USED OR DISCLOSED WITHOUT WRITTEN CONSENT OF THE ARCHITECT

PROJECT NO 22039
DATE JANUARY 25, 2023
DRAWING TITLE
LEVEL 2 - ENLARGED TRELLIS FLOOR PLAN AND RCP
DRAWING NO.
A4.2.3

C:\Users\Brandi\Documents\22039_DPH_Building 12-Arch_brandi@sms-arch.com.rvt

10/8/2024 5:11:20 PM

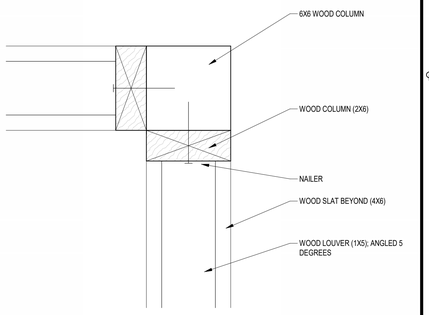

DECORATIVE WOOD LOUVERED SCREEN AT COLUMN — 3" = 1'-0" — 17 (A4.2.4 | A4.2.4)

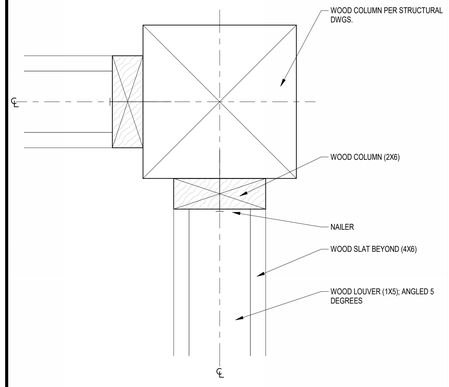

WOOD SCREEN AT COLUMN — 3" = 1'-0" — 13 (A4.2.1 | A4.2.4)

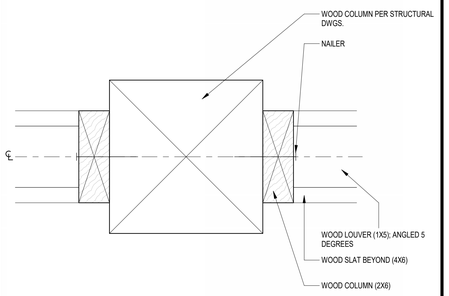

WOOD SCREEN AT COLUMN — 3" = 1'-0" — 9 (A4.2.1 | A4.2.4)

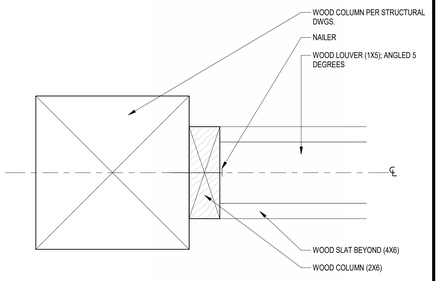

WOOD SCREEN AT COLUMN — 3" = 1'-0" — 5 (A4.2.1 | A4.2.4)

Zoning: CanningK 11/13/2024

Building&Safety: OCPWAzarvandB 12/22/2025

Permits: BNR21-0246, ELE21-0853, MEC21-0514, PLB21-0900

County of Orange - OC Public Works
OC Development Services
APPROVED

This set of plans and specifications must be kept on the job at all times. It is unlawful to make any changes or alterations to these plans without written permission from OC Public Works/ OC Development Services of Orange County. The stamping of these plan specifications SHALL NOT be held to permit or be an approval of the violation of any provisions of any County Ordinance or State law.

Hind Tahtabawi
BUILDING OFFICIAL

CITY OF DANA POINT
PLANNING DIVISION

This plan has been reviewed for ZONING ONLY and meets the requirements of Title 9 of the Dana Point Municipal Code.

APPROVED KBN

DATE 10/21/24

COMMENTS BUILDING 12 (OC PERMIT PKG21-0516) PER CDP13-0018(I).

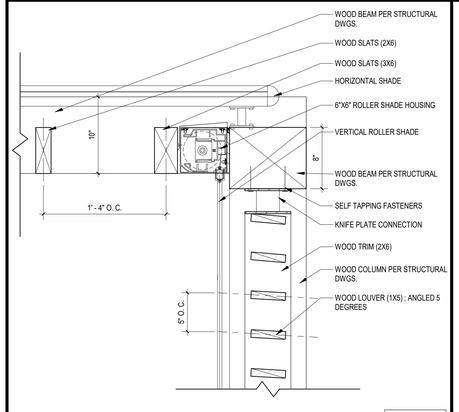

WOOD TRELLIS SCREEN HEADER W/ROLLER SHADE — 1 1/2" = 1'-0" — 18 (A3.3.1 | A4.2.4)

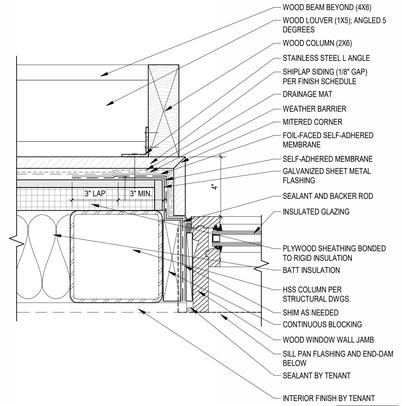

WOOD SCREEN WINDOW WALL — 3" = 1'-0" — 14 (A4.2.1 | A4.2.4)

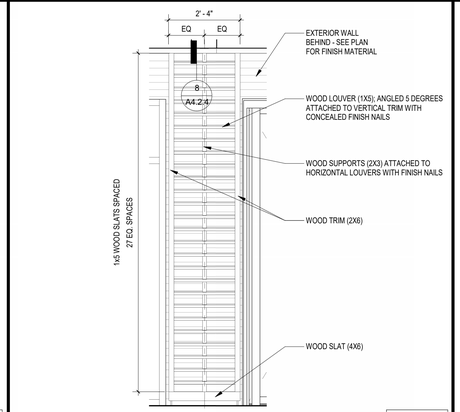

TYP. WOOD SLAP SCREEN AGAINST WALL — 1/2" = 1'-0" — 10 (A4.2.1 | A4.2.4)

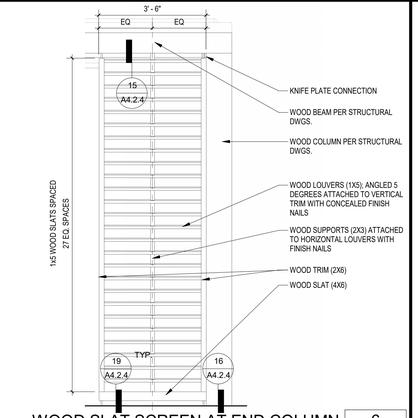

WOOD SLAT SCREEN AT END COLUMN — 1/2" = 1'-0" — 6 (A4.2.1 | A4.2.4)

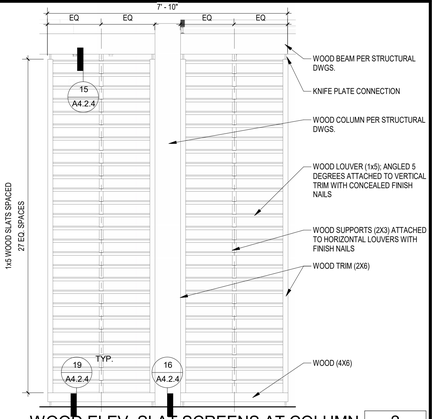

WOOD ELEV. SLAT SCREENS AT COLUMN — 1/2" = 1'-0" — 2 (A4.2.1 | A4.2.4)

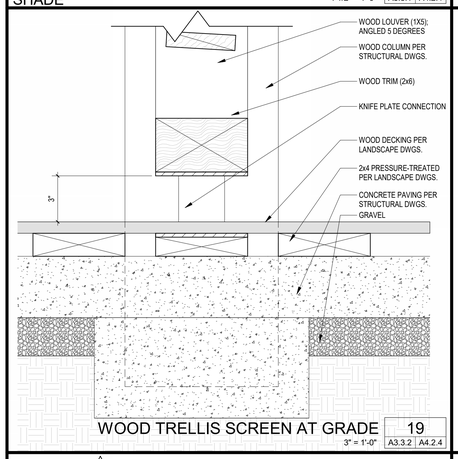

WOOD TRELLIS SCREEN AT GRADE — 3" = 1'-0" — 19 (A3.3.2 | A4.2.4)

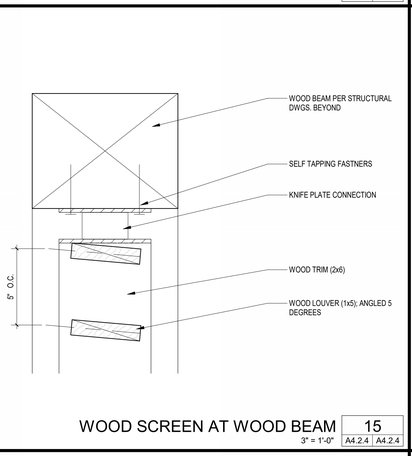

WOOD SCREEN AT WOOD BEAM — 3" = 1'-0" — 15 (A4.2.4 | A4.2.4)

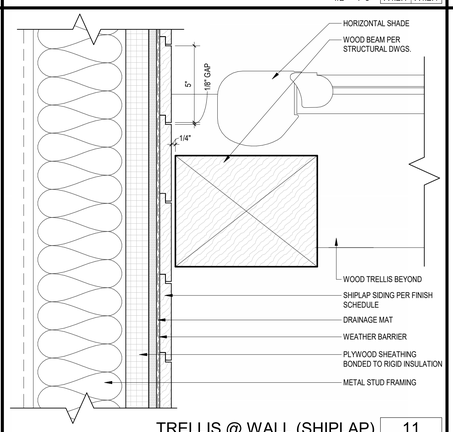

TRELLIS @ WALL (SHIPLAP) — 3" = 1'-0" — 11 (A3.3.1 | A4.2.4)

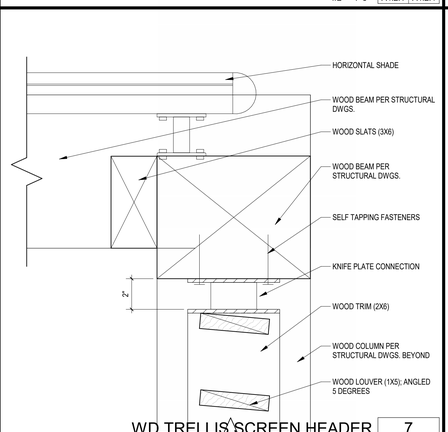

WD TRELLIS SCREEN HEADER — 3" = 1'-0" — 7 (A3.3.2 | A4.2.4)

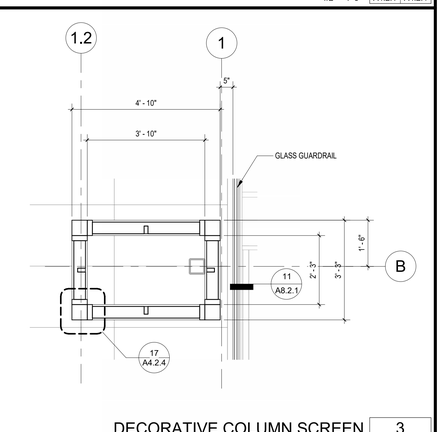

DECORATIVE COLUMN SCREEN — 1/2" = 1'-0" — 3 (A2.0.2 | A4.2.4)

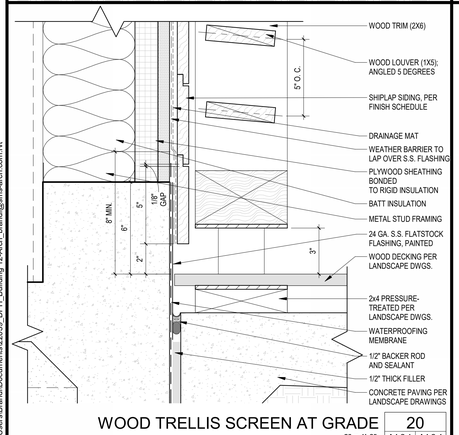

WOOD TRELLIS SCREEN AT GRADE — 3" = 1'-0" — 20 (A4.2.1 | A4.2.4)

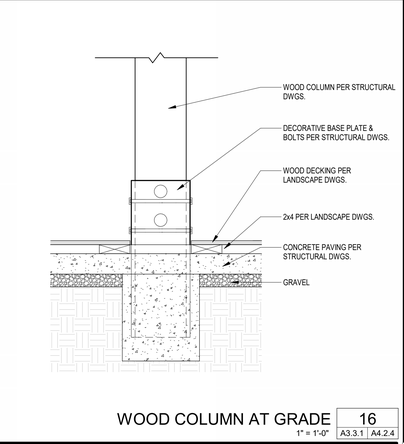

WOOD COLUMN AT GRADE — 1" = 1'-0" — 16 (A3.3.1 | A4.2.4)

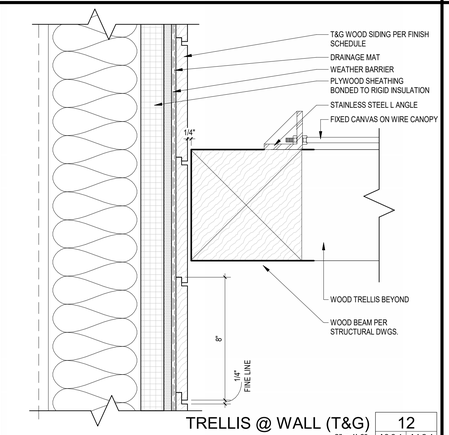

TRELLIS @ WALL (T&G) — 3" = 1'-0" — 12 (A3.3.1 | A4.2.4)

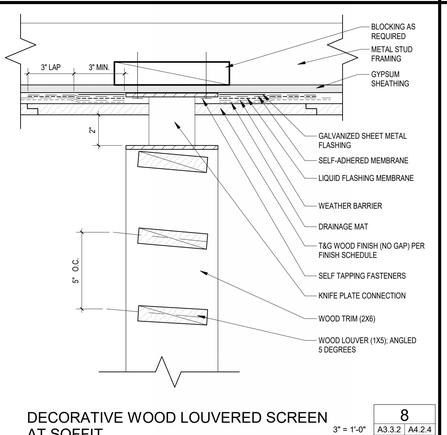

DECORATIVE WOOD LOUVERED SCREEN AT SOFFIT — 3" = 1'-0" — 8 (A3.3.2 | A4.2.4)

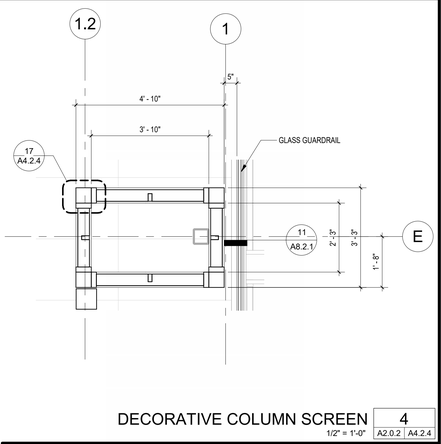

DECORATIVE COLUMN SCREEN — 1/2" = 1'-0" — 4 (A2.0.2 | A4.2.4)

SMS ARCHITECTS
100 Progress | Suite 250
Irvine, California 92618
949.757.3240 | www.sms-arch.com

CONSTANT

DANA POINT HARBOR PARTNERS

PROJECT NAME
DANA POINT HARBOR COMMERCIAL CORE
BUILDING 12
1290 HARBOR WAY
DANA POINT, CA 92629

CLIENT
BURNHAM | WARD PROPERTIES
BWP

LICENSED ARCHITECT
BRANDON DEDMAN
No. C-37432
11.30.23
Exp. Date
STATE OF CALIFORNIA

No.	DATE	ISSUE
A	04/21/2023	COUNTY RESUBMITTAL
B	10/09/2024	CITY PLANNING RESUBMITTAL

DRAWINGS AND WRITTEN MATERIAL APPEARING HEREIN CONSTITUTE ORIGINAL AND UNPUBLISHED WORK OF SMS ARCHITECTS AND MAY NOT BE DUPLICATED, USED OR DISCLOSED WITHOUT WRITTEN CONSENT OF THE ARCHITECT

PROJECT NO 22039

DATE JANUARY 25, 2023

DRAWING TITLE
ENLARGED TRELLIS ELEVATIONS AND DETAILS

DRAWING NO
A4.2.4

C:\Users\Brandt\Documents\22039_DPH_Building 12-Arch_brandt@sms-arch.com.rvt

10/8/2024 5:11:32 PM

CITY OF DANA POINT
PLANNING DIVISION
This plan has been reviewed for ZONING ONLY and meets the requirements of Title 9 of the Dana Point Municipal Code.

APPROVED KBN

DATE 10/21/24

COMMENTS BUILDING 12 (OC PERMIT PKG21-0516) PER CDP13-0018(I).

Zoning: CanningK 11/13/2024

Building&Safety: OCPWAzarvandB 12/22/2025

Permits: BNR21-0246, ELE21-0853, MEC21-0514, PLB21-0900

County of Orange - OC Public Works
OC Development Services
APPROVED

This set of plans and specifications must be kept on the job at all times. It is unlawful to make any changes or alterations to these plans without written permission from OC Public Works, OC Development Services of Orange County. The stamping of these plan specifications SHALL NOT be held to permit or be an approval of the violation of any provisions of any County Ordinance or State law.

Hind Tahtabaee
BUILDING OFFICIAL

SMS ARCHITECTS
100 Progress | Suite 250
Irvine, California 92618
949.757.3240 | www.sms-arch.com

CONSTANT

DANA POINT HARBOR PARTNERS

PROJECT NAME
DANA POINT HARBOR COMMERCIAL CORE
BUILDING 12
1290 HARBOR WAY
DANA POINT, CA 92629

CLIENT
BWP PROPERTIES
BURNHAM | WARD

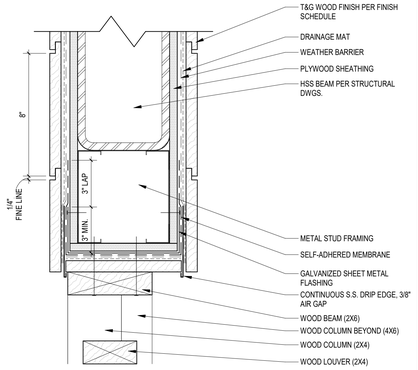

WOOD SCREEN AT END CAP HEADER (T&G) 14
3" = 1'-0" A3.3.1 | A4.2.5

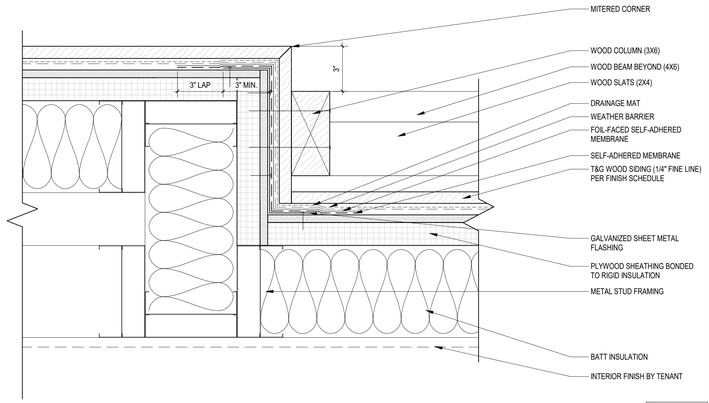

WOOD SCREEN AT WALL (T&G) 15
3" = 1'-0" A4.2.5 | A4.2.5

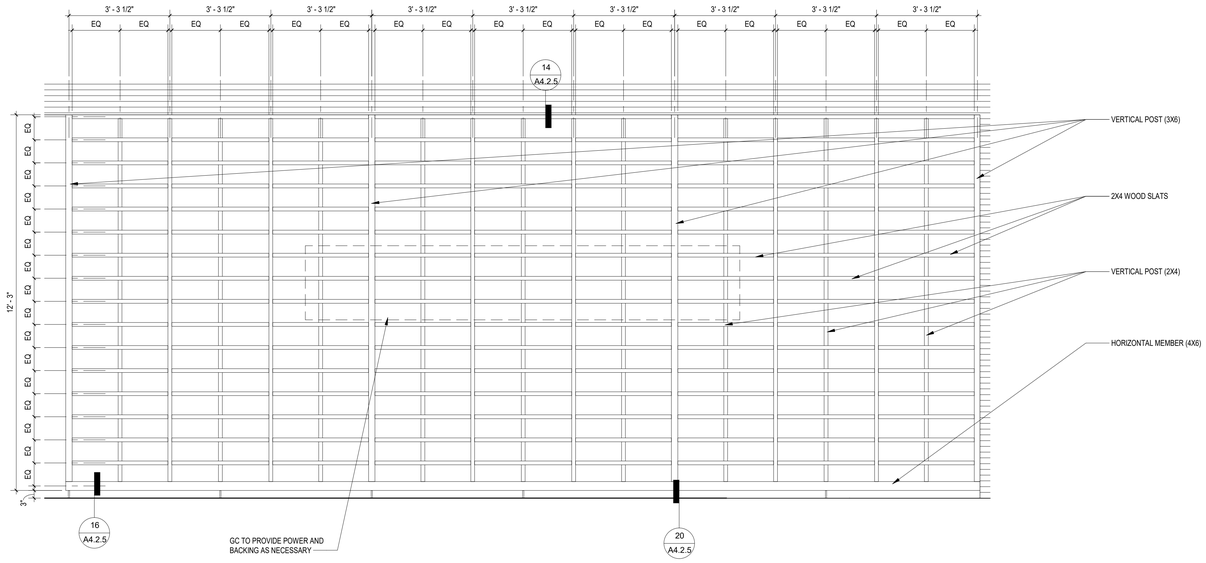

ENLARGED WOOD SCREEN ELEVATION 3
1/2" = 1'-0" A3.1.1 | A4.2.5

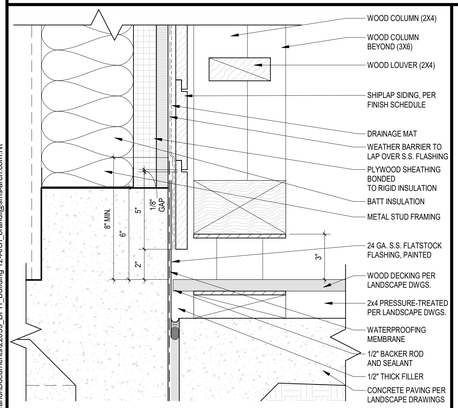

WOOD SCREEN AT GRADE 20
3" = 1'-0" A3.3.2 | A4.2.5

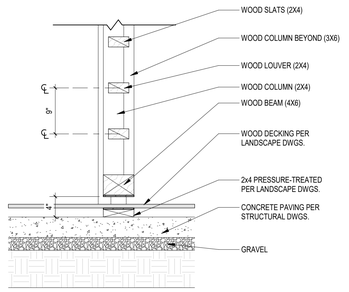

WOOD SCREEN AT GRADE 16
1" = 1'-0" A4.2.5 | A4.2.5

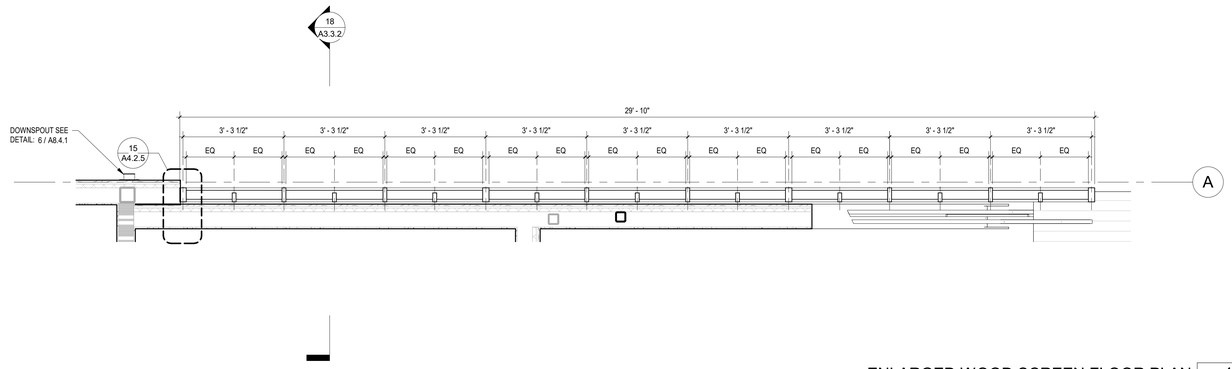

ENLARGED WOOD SCREEN FLOOR PLAN 4
1/2" = 1'-0" A2.0.1 | A4.2.5

LICENSED ARCHITECT
BRANDON DEDMON
No. C-37432
11.30.23
Exp. Date
STATE OF CALIFORNIA

No.	DATE	ISSUE
A	04/21/2023	COUNTY RESUBMITTAL
B	10/09/2024	CITY PLANNING RESUBMITTAL

DRAWINGS AND WRITTEN MATERIAL APPEARING HEREIN CONSTITUTE ORIGINAL AND UNPUBLISHED WORK OF SMS ARCHITECTS AND MAY NOT BE DUPLICATED, USED OR DISCLOSED WITHOUT WRITTEN CONSENT OF THE ARCHITECT

PROJECT NO 22039

DATE JANUARY 25, 2023

DRAWING TITLE
ENLARGED WOOD SCREEN ELEVATION AND DETAILS

DRAWING NO.
A4.2.5

C:\Users\Brandi\Documents\22039_DPH_Building 12-Arch_brandi@sms-arch.com.rvt

10/8/2024 5:11:38 PM

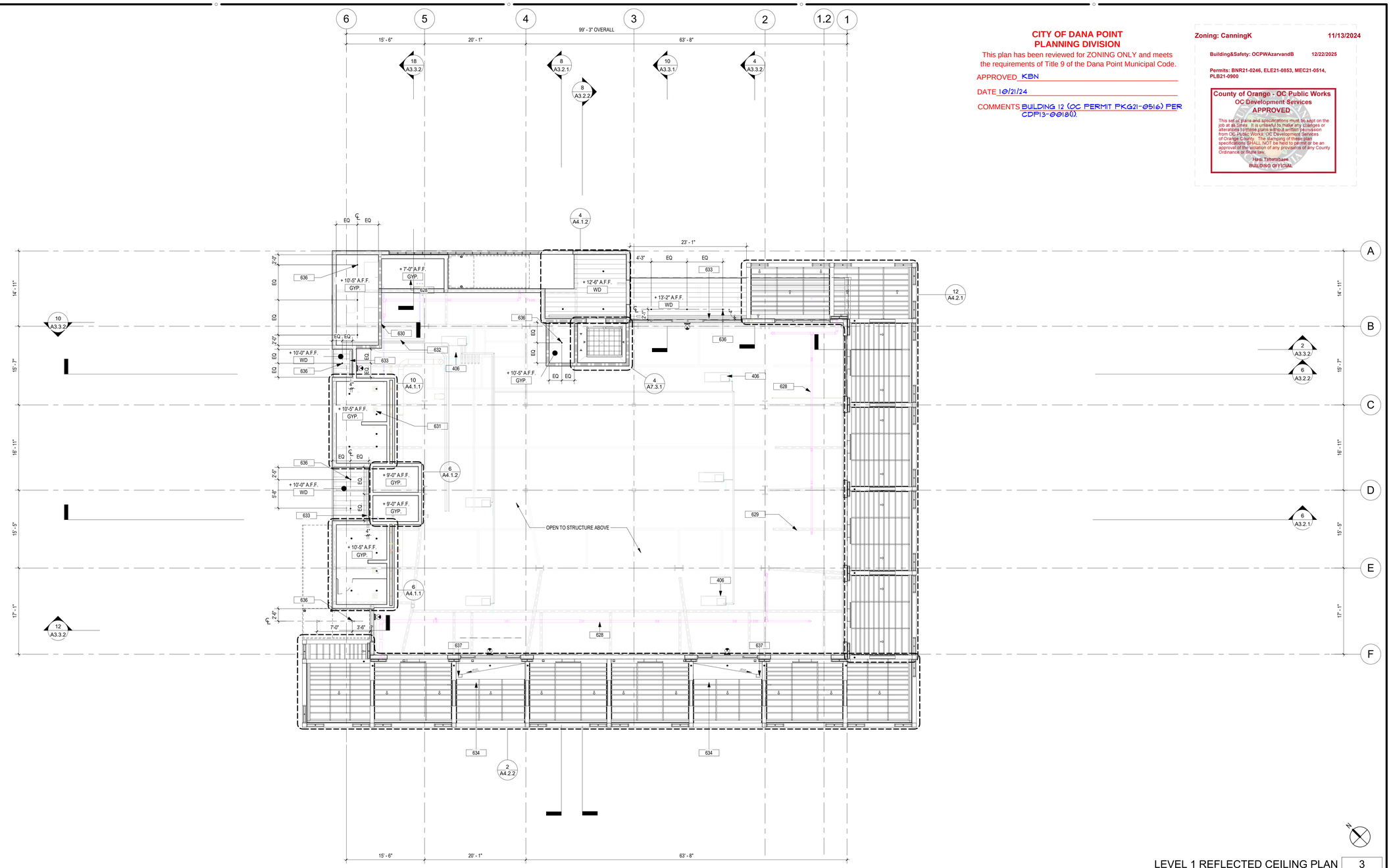

CITY OF DANA POINT
PLANNING DIVISION

This plan has been reviewed for ZONING ONLY and meets the requirements of Title 9 of the Dana Point Municipal Code.

APPROVED KBN

DATE 10/21/24

COMMENTS BUILDING 12 (OC PERMIT PKG21-0516) PER CDP13-0018(I).

Zoning: CanningK 11/13/2024

Building&Safety: OCPWAzarvandB 12/22/2025

Permits: BNR21-0246, ELE21-0853, MEC21-0514, PLB21-0900

County of Orange - OC Public Works
OC Development Services
APPROVED

This set of plans and specifications must be kept on the job at all times. It is unlawful to make any changes or alterations to these plans without written permission from OC Public Works, OC Development Services of Orange County. The stamping of these plan specifications SHALL NOT be held to permit or be an approval of the violation of any provisions of any County Ordinance or State law.

Hadi Tabatabaee
BUILDING OFFICIAL

LEVEL 1 REFLECTED CEILING PLAN 3
1/8" = 1'-0" A3.1.1 A6.1.1

CEILING PLAN LEGEND

Room name
101 ROOM SYMBOL

1/2" GYPSUM BOARD CEILING OVER 4" x 20 GA. JOIST @ 16" O.C. OR SUSPENDED GYP. BD. CEILING

WOOD CEILING

AIR SUPPLY REGISTER

AIR RETURN REGISTER

AIR EXHAUST REGISTER

EXIT SIGN

CEILING PLAN KEYNOTES

406 MECHANICAL UNITS. REFER TO MECHANICAL PLANS
628 SANITARY LINE REFER TO PLUMBING DRAWINGS FOR FURTHER INFORMATION - TYP.
629 STRUCTURAL BEAMS REFER TO STRUCTURAL DRAWINGS FOR FURTHER INFORMATION - TYP.
630 AIR DUCT REFER TO MECHANICAL DRAWINGS FOR FURTHER INFORMATION - TYP.
631 EXHAUST FAN REFER TO MECHANICAL DRAWINGS FOR FURTHER INFORMATION - TYP.
632 SINGLE LINE DIAGRAM REFER TO ELECTRICAL DRAWINGS FOR FURTHER INFORMATION - TYP.
633 SOFFIT VENT -TYP. SEE DETAIL 3/A8.5.2
634 T&G WOOD CANOPY. REFER TO STRUCTURAL DRAWINGS FOR BACKING.
636 LIGHT FIXTURE PER LIGHTING DWGS. - TYP
637 SCUPPER DRAIN SEE DETAIL 20/A4.2.2

CEILING PLAN NOTES

1. CONCEALED SPRINKLER HEADS TO BE USED IN ALL PUBLIC LOCATIONS.
2. SEMI RECESSED SPRINKLERS TO BE USED IN ACOUSTICAL TILE CEILINGS.
3. FOR LIGHTING FIXTURE DESCRIPTION AND SPECIFICATIONS SEE ELECTRICAL PLANS.

SMS ARCHITECTS
100 Progress | Suite 250
Irvine, California 92618
949.757.3240 | www.sms-arch.com

CONSTANT

DANA POINT HARBOR PARTNERS

PROJECT NAME
DANA POINT HARBOR COMMERCIAL CORE
BUILDING 12
1290 HARBOR WAY
DANA POINT, CA 92629

CLIENT
BURNHAM | WARD PROPERTIES

No.	DATE	ISSUE
	9/30/2022	50% SCHEMATIC DESIGN
	10/28/2022	100% SCHEMATIC DESIGN
	02/10/2023	100% DESIGN DEVELOPMENT
	03/17/2023	50% CONSTRUCTION DOCUMENTS
A	04/21/2023	COUNTY RESUBMITTAL
B	10/09/2024	CITY PLANNING RESUBMITTAL

DRAWINGS AND WRITTEN MATERIAL APPEARING HEREIN CONSTITUTE ORIGINAL AND UNPUBLISHED WORK OF SMS ARCHITECTS AND MAY NOT BE DUPLICATED, USED OR DISCLOSED WITHOUT WRITTEN CONSENT OF THE ARCHITECT

PROJECT NO. 22039

DATE JANUARY 25, 2023

DRAWING TITLE
LEVEL 1 REFLECTED CEILING PLAN

DRAWING NO.
A6.1.1

10/8/2024 5:11:45 PM

C:\Users\Brandi\Documents\22039_DPH_Building 12-Arch_brandi@sms-arch.com.rvt

CITY OF DANA POINT
PLANNING DIVISION

This plan has been reviewed for ZONING ONLY and meets the requirements of Title 9 of the Dana Point Municipal Code.

APPROVED KBN

DATE 10/21/24

COMMENTS BUILDING 12 (OC PERMIT PKG21-0516) PER CDP13-0018(I).

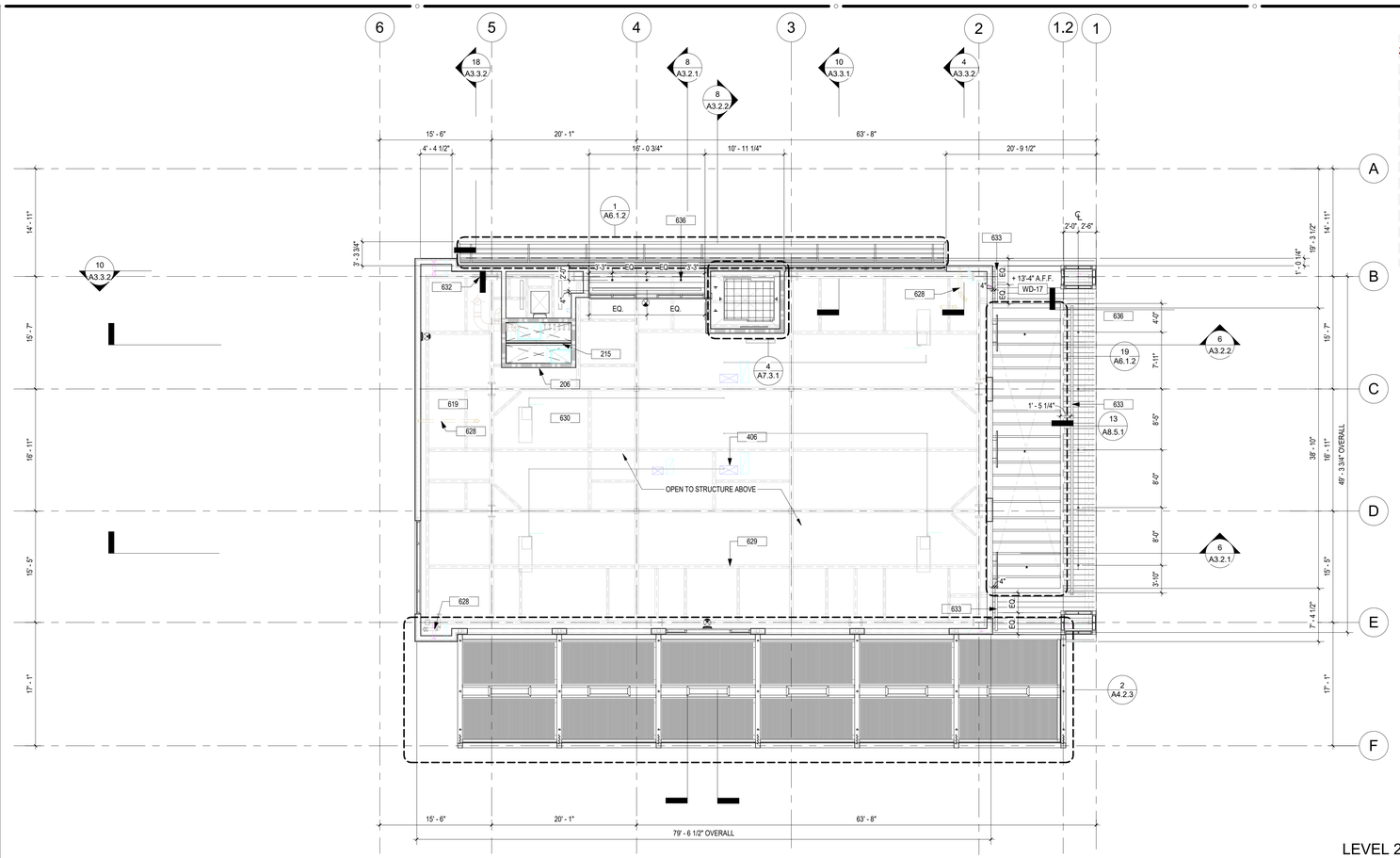

LEVEL 2 REFLECTED CEILING PLAN 3
1/8" = 1'-0" A3.1.1 | A6.1.2

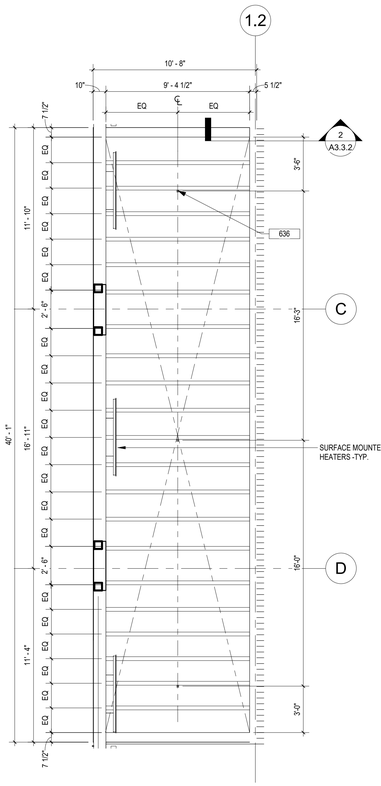

ENLARGED DECORATIVE TRELLIS RCP 19
1/4" = 1'-0" A6.1.2 | A6.1.2

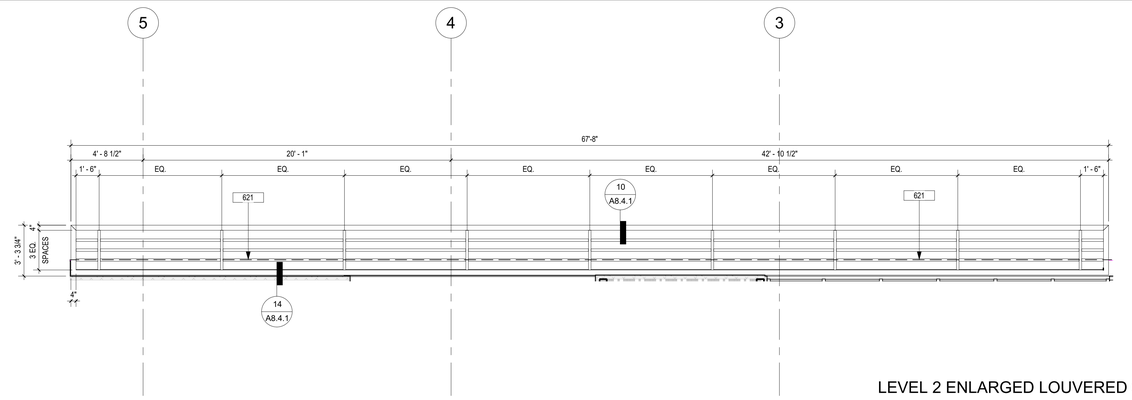

LEVEL 2 ENLARGED LOUVERED CANOPY 1
1/4" = 1'-0" A6.1.2 | A6.1.2

CEILING PLAN LEGEND

Room name 101 — ROOM SYMBOL

1/2" GYPSUM BOARD CEILING OVER 4" x 20 GA. JOIST @ 16" O.C. OR SUSPENDED GYP. BD. CEILING

WOOD CEILING

AIR SUPPLY REGISTER

AIR RETURN REGISTER

AIR EXHAUST REGISTER

EXIT SIGN

CEILING PLAN KEYNOTES

206 SHAFT FOR FUTURE TENANT USE
215 CHAINLINK BARRIER WITHIN SHAFT
406 MECHANICAL UNITS. REFER TO MECHANICAL PLANS
621 SOFFIT ABOVE
628 SANITARY LINE REFER TO PLUMBING DRAWINGS FOR FURTHER INFORMATION - TYP.
629 STRUCTURAL BEAMS REFER TO STRUCTURAL DRAWINGS FOR FURTHER INFORMATION - TYP.
632 SINGLE LINE DIAGRAM REFER TO ELECTRICAL DRAWINGS FOR FURTHER INFORMATION - TYP.
633 SOFFIT VENT -TYP. SEE DETAIL 3/A8.5.2
636 LIGHT FIXTURE PER LIGHTING DWGS. - TYP

CEILING PLAN NOTES

1. CONCEALED SPRINKLER HEADS TO BE USED IN ALL PUBLIC LOCATIONS.
2. SEMI RECESSED SPRINKLERS TO BE USED IN ACOUSTICAL TILE CEILINGS.
3. FOR LIGHTING FIXTURE DESCRIPTION AND SPECIFICATIONS SEE ELECTRICAL PLANS.

Zoning: CanningK 11/13/2024

Building&Safety: OCPWAzarvandB 12/22/2025

Permits: BNR21-0246, ELE21-0853, MEC21-0514, PLB21-0900

County of Orange - OC Public Works
OC Development Services
APPROVED

This set of plans and specifications must be kept on the job at all times. It is unlawful to make any changes or alterations to these plans without written permission from OC Public Works, OC Development Services of Orange County. The stamping of these plan specifications SHALL NOT be held to permit or be an approval of the violation of any provisions of any County Ordinance or State law.

Hind Tahtabaee
BUILDING OFFICIAL

SMS ARCHITECTS
100 Progress | Suite 250
Irvine, California 92618
949.757.3240 | www.sms-arch.com

CONSTANT

DANA POINT HARBOR PARTNERS

PROJECT NAME
DANA POINT HARBOR COMMERCIAL CORE
BUILDING 12
1290 HARBOR WAY
DANA POINT, CA 92629

CLIENT
BURNHAM | WARD PROPERTIES
BWP

No.	DATE	ISSUE
	9/30/2022	50% SCHEMATIC DESIGN
	10/28/2022	100% SCHEMATIC DESIGN
	02/10/2023	100% DESIGN DEVELOPMENT
	03/17/2023	50% CONSTRUCTION DOCUMENTS
A	04/21/2023	COUNTY RESUBMITTAL
B	10/09/2024	CITY PLANNING RESUBMITTAL

DRAWINGS AND WRITTEN MATERIAL APPEARING HEREIN CONSTITUTE ORIGINAL AND UNPUBLISHED WORK OF SMS ARCHITECTS AND MAY NOT BE DUPLICATED, USED OR DISCLOSED WITHOUT WRITTEN CONSENT OF THE ARCHITECT

PROJECT NO. 22039

DATE JANUARY 25, 2023

DRAWING TITLE
LEVEL 2 REFLECTED CEILING PLAN

DRAWING NO.
A6.1.2

C:\Users\Brandi\Documents\22039_DPH_Building 12-Arch_brandi@sms-arch.com.rvt

10/8/2024 5:11:51 PM

CITY OF DANA POINT
PLANNING DIVISION

This plan has been reviewed for ZONING ONLY and meets the requirements of Title 9 of the Dana Point Municipal Code.

APPROVED KBN

DATE 10/21/24

COMMENTS BUILDING 12 (OC PERMIT PKG21-0516) PER CDP13-0018().

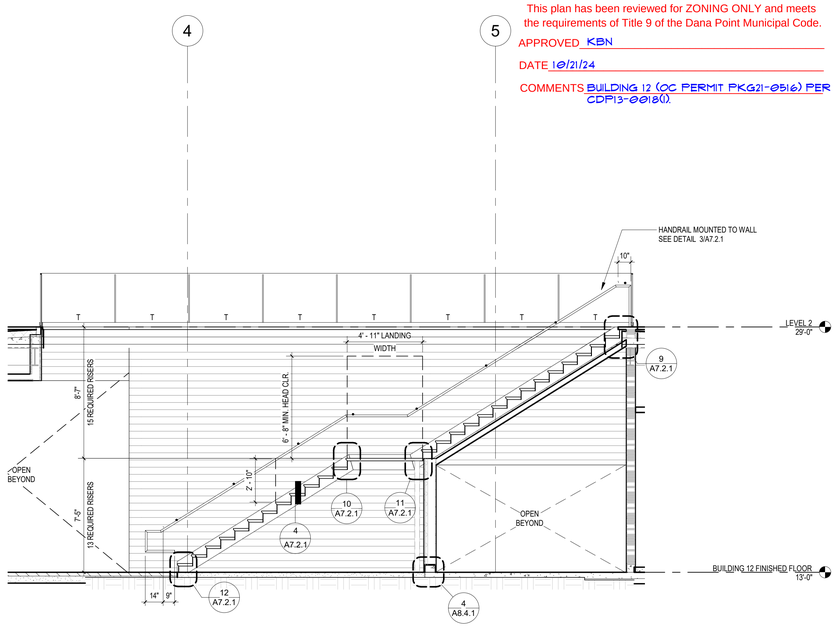

STAIR SECTION 1 — 14 (A7.1.1 | A7.1.1) — 1/4" = 1'-0"

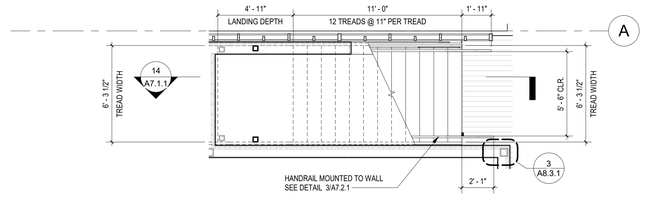

ENLARGED STAIR PLAN, LEVEL 1 — 5 (A2.0.1 | A7.1.1) — 1/4" = 1'-0"

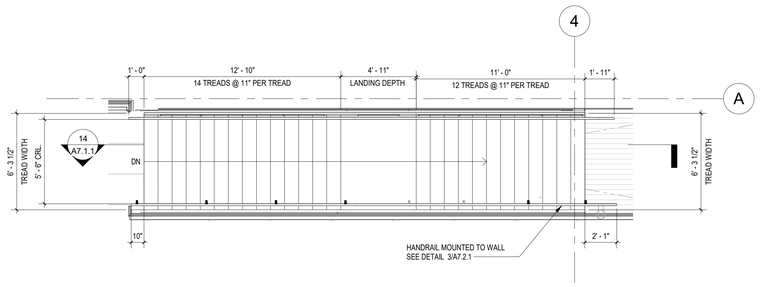

ENLARGED STAIR PLAN, LEVEL 2 — 6 (A2.0.2 | A7.1.1) — 1/4" = 1'-0"

Zoning: CanningK 11/13/2024

Building&Safety: OCPWAzarvandB 12/22/2025

Permits: BNR21-0246, ELE21-0853, MEC21-0514, PLB21-0900

County of Orange - OC Public Works
OC Development Services
APPROVED

This set of plans and specifications must be kept on the job at all times. It is unlawful to make any changes or alterations to these plans without written permission from OC Public Works, OC Development Services of Orange County. The stamping of these plan specifications SHALL NOT be held to permit or be an approval of the violation of any provisions of any County Ordinance or State law.

Hind Tahtabaee
BUILDING OFFICIAL

SMS ARCHITECTS
100 Progress | Suite 250
Irvine, California 92618
949.757.3240 | www.sms-arch.com

CONSTANT

DANA POINT HARBOR PARTNERS

PROJECT NAME
DANA POINT HARBOR COMMERCIAL CORE
BUILDING 12
1290 HARBOR WAY
DANA POINT, CA 92629

CLIENT
BURNHAM | WARD PROPERTIES
BWP

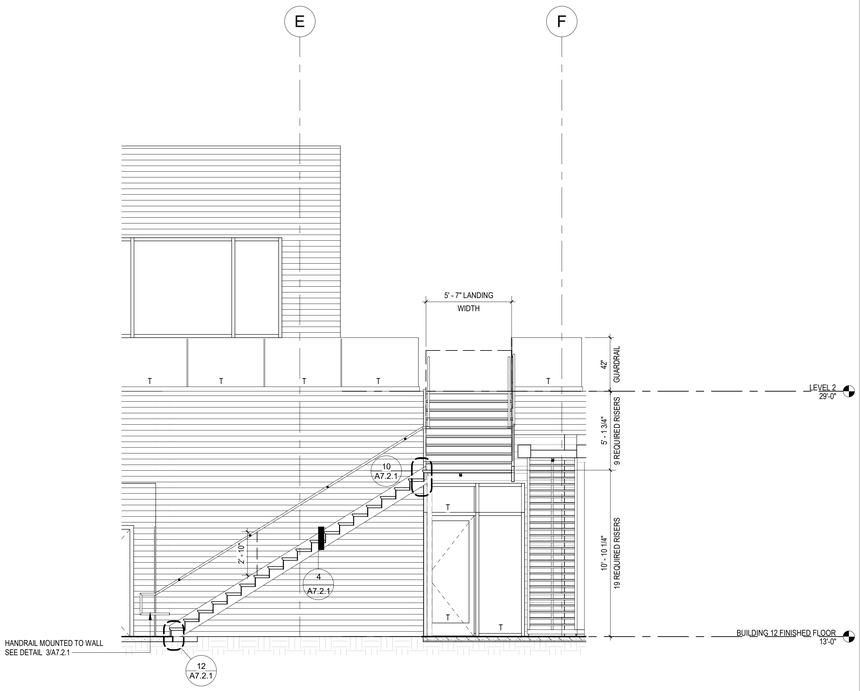

STAIR SECTION 2 — 16 (A7.1.1 | A7.1.1) — 1/4" = 1'-0"

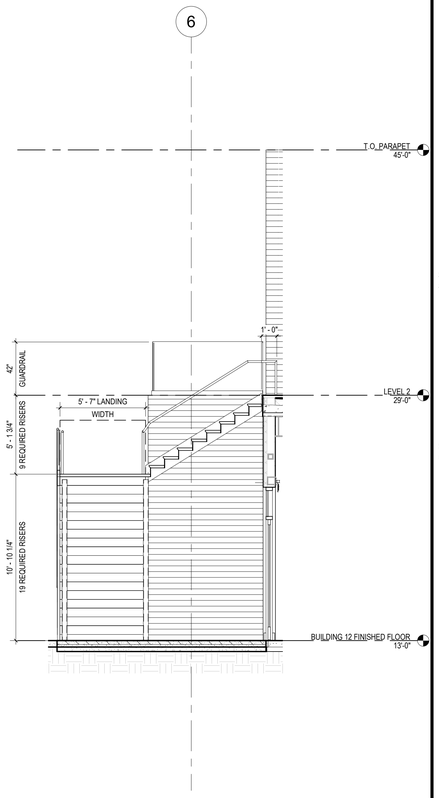

STAIR SECTION 3 — 12 (A7.1.1 | A7.1.1) — 1/4" = 1'-0"

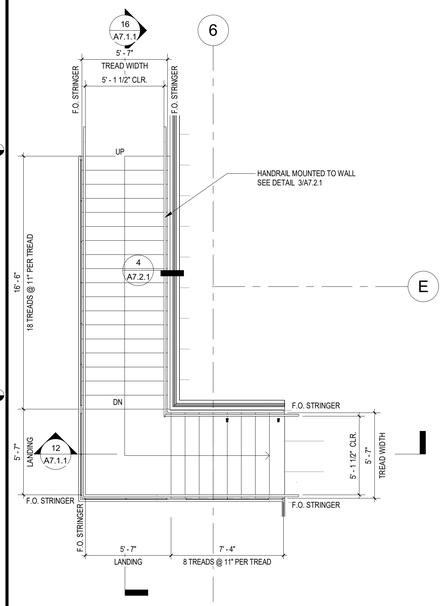

ENLARGED STAIR PLAN, LEVEL 2 — 8 (A2.0.2 | A7.1.1) — 1/4" = 1'-0"

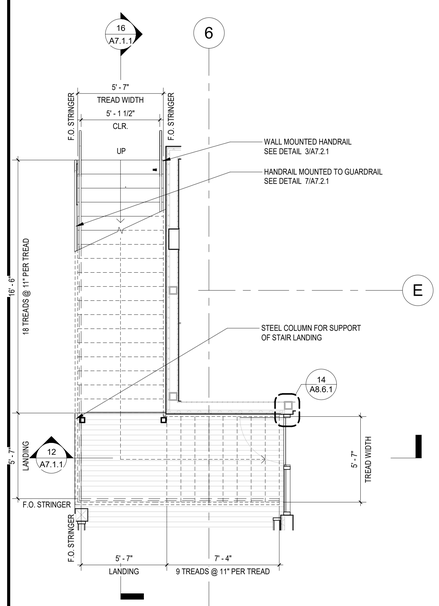

ENLARGED STAIR PLAN, LEVEL 1 — 4 (A2.0.1 | A7.1.1) — 1/4" = 1'-0"

LICENSED ARCHITECT
BRANDON DEDMON
No. C-37432
11.30.23
Exp. Date
STATE OF CALIFORNIA

No.	DATE	ISSUE
	9/30/2022	50% SCHEMATIC DESIGN
	10/28/2022	100% SCHEMATIC DESIGN
	02/10/2023	100% DESIGN DEVELOPMENT
	03/17/2023	50% CONSTRUCTION DOCUMENTS
A	04/21/2023	COUNTY RESUBMITTAL
B	10/09/2024	CITY PLANNING RESUBMITTAL

DRAWINGS AND WRITTEN MATERIAL APPEARING HEREIN CONSTITUTE ORIGINAL AND UNPUBLISHED WORK OF SMS ARCHITECTS AND MAY NOT BE DUPLICATED, USED OR DISCLOSED WITHOUT WRITTEN CONSENT OF THE ARCHITECT

PROJECT NO. 22039

DATE JANUARY 25, 2023

DRAWING TITLE
STAIR PLANS AND SECTIONS

DRAWING NO.
A7.1.1

C:\Users\Brandi\Documents\22039_DPH_Building 12-Arch_brandi@sms-arch.com.rvt

10/8/2024 5:11:58 PM

CITY OF DANA POINT
PLANNING DIVISION

This plan has been reviewed for ZONING ONLY and meets the requirements of Title 9 of the Dana Point Municipal Code.

APPROVED KBN

DATE 10/21/24

COMMENTS BUILDING 12 (OC PERMIT PKG21-0516) PER CDP13-0018(I).

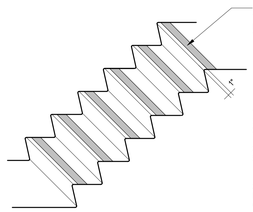

STAIR MARKING 13
1/2" = 1'-0" A7.2.1

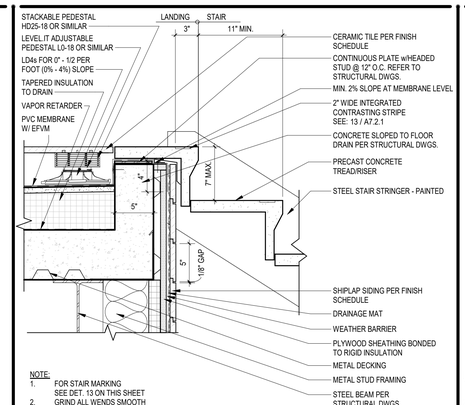

NOTE:
1. FOR STAIR MARKING SEE DET. 13 ON THIS SHEET
2. GRIND ALL WENDS SMOOTH

PRECAST STAIR @ TOP 9
1 1/2" = 1'-0" A3.3.2 A7.2.1

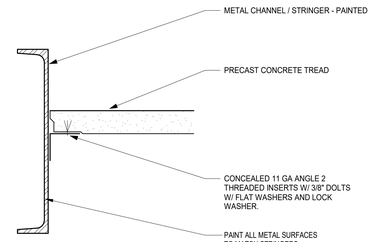

NOTE:
1. FOR STAIR MARKING SEE DETAIL 2 ON THIS SHEET
2. GRIND ALL WENDS SMOOTH

PRECAST STRINGER 5
3" = 1'-0" A7.2.1

Zoning: CanningK **11/13/2024**

Building&Safety: OCPWAzarvandB **12/22/2025**

Permits: BNR21-0246, ELE21-0853, MEC21-0514, PLB21-0900

County of Orange - OC Public Works
OC Development Services
APPROVED

This set of plans and specifications must be kept on the job at all times. It is unlawful to make any changes or alterations to these plans without written permission from OC Public Works, OC Development Services of Orange County. The stamping of these plan specifications SHALL NOT be held to permit or be an approval of the violation of any provisions of any County Ordinance or State law.

Hind Tahtabaee
BUILDING OFFICIAL

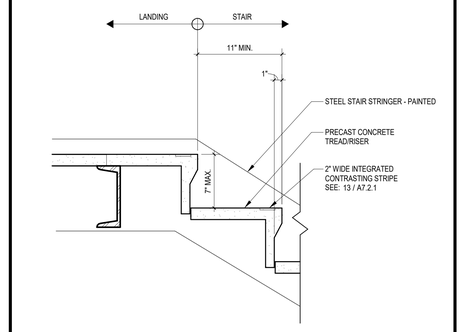

NOTE:
1. FOR STAIR MARKING SEE DET. 13 ON THIS SHEET
2. GRIND ALL WENDS SMOOTH

PRECAST STAIR @ TOP LANDING 10
1 1/2" = 1'-0" A7.1.1 A7.2.1

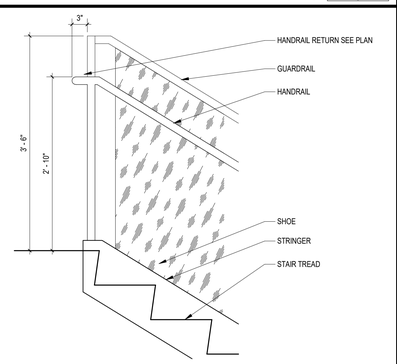

NOTE:
1. FOR STAIR MARKING SEE DET. 13 ON THIS SHEET
2. GRIND ALL WENDS SMOOTH

GUARDRAIL @ LANDING 6
1" = 1'-0" A7.2.1

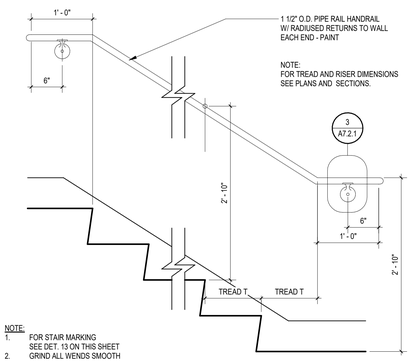

NOTE:
1. FOR STAIR MARKING SEE DET. 13 ON THIS SHEET
2. GRIND ALL WENDS SMOOTH

WALL MOUNTED HANDRAIL 2
1" = 1'-0" A7.2.1

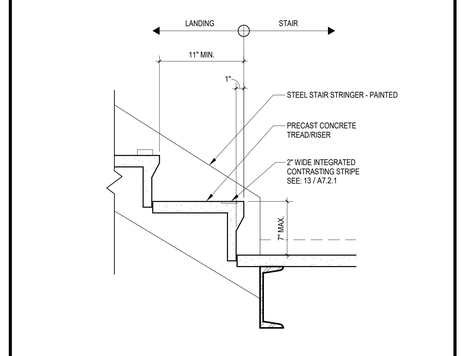

NOTE:
1. FOR STAIR MARKING SEE DET. 13 ON THIS SHEET
2. GRIND ALL WENDS SMOOTH

PRECAST STAIR @ BOTTOM LANDING 11
1 1/2" = 1'-0" A7.1.1 A7.2.1

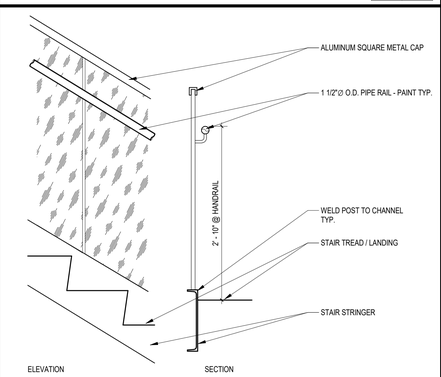

NOTE: GRIND ALL WELDS SMOOTH

NOTE:
1. FOR STAIR MARKING SEE DET. 13 ON THIS SHEET
2. GRIND ALL WENDS SMOOTH

RAILING POST 7
1" = 1'-0" A7.2.1

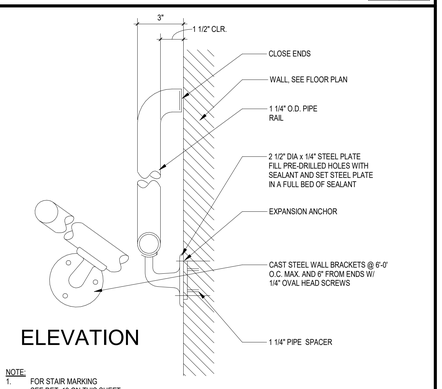

ELEVATION

NOTE:
1. FOR STAIR MARKING SEE DET. 13 ON THIS SHEET
2. GRIND ALL WENDS SMOOTH

WALL HANDRAIL CONN 3
3" = 1'-0" A7.2.1

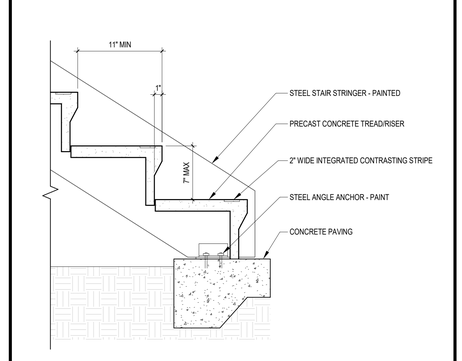

NOTE:
1. FOR STAIR MARKING SEE DETAIL 2 ON THIS SHEET
2. GRIND ALL WENDS SMOOTH

PRECAST STAIR @ GRADE 12
1 1/2" = 1'-0" A7.1.1 A7.2.1

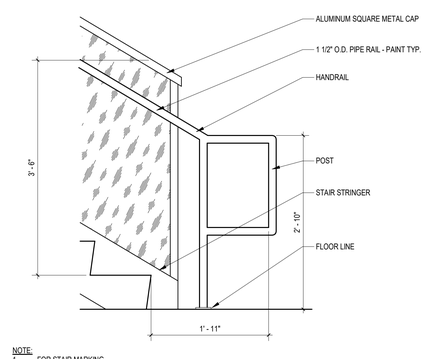

NOTE:
1. FOR STAIR MARKING SEE DET. 13 ON THIS SHEET
2. GRIND ALL WENDS SMOOTH

RAILING @ FLOOR 8
1" = 1'-0" A7.2.1

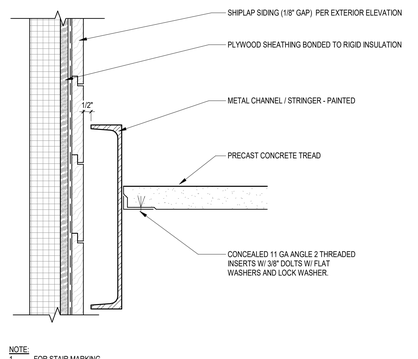

NOTE:
1. FOR STAIR MARKING SEE DET. 13 ON THIS SHEET
2. GRIND ALL WENDS SMOOTH

PRECAST STRINGER @ WALL 4
3" = 1'-0" A7.1.1 A7.2.1

SMS ARCHITECTS
100 Progress | Suite 250
Irvine, California 92618
949.757.3240 | www.sms-arch.com

CONSTANT

DANA POINT HARBOR PARTNERS

PROJECT NAME
DANA POINT HARBOR COMMERCIAL CORE
BUILDING 12
1290 HARBOR WAY
DANA POINT, CA 92629

CLIENT
BWP BURNHAM|WARD PROPERTIES

No.	DATE	ISSUE
	9/30/2022	50% SCHEMATIC DESIGN
	10/28/2022	100% SCHEMATIC DESIGN
	02/10/2023	100% DESIGN DEVELOPMENT
	03/17/2023	50% CONSTRUCTION DOCUMENTS
A	04/21/2023	COUNTY RESUBMITTAL
B	10/09/2024	CITY PLANNING RESUBMITTAL

DRAWINGS AND WRITTEN MATERIAL APPEARING HEREIN CONSTITUTE ORIGINAL AND UNPUBLISHED WORK OF SMS ARCHITECTS AND MAY NOT BE DUPLICATED, USED OR DISCLOSED WITHOUT WRITTEN CONSENT OF THE ARCHITECT

PROJECT NO 22039

DATE JANUARY 25, 2023

DRAWING TITLE
STAIR DETAILS

DRAWING NO.
A7.2.1

C:\Users\Brandt\Documents\22039_DPH_Building 12-Arch_brandt@sms-arch.com.rvt

10/8/2024 5:12:02 PM

CITY OF DANA POINT
PLANNING DIVISION

This plan has been reviewed for ZONING ONLY and meets the requirements of Title 9 of the Dana Point Municipal Code.

APPROVED KBN

DATE 10/21/24

COMMENTS BUILDING 12 (OC PERMIT PKG21-0516) PER CDP13-0018(I).

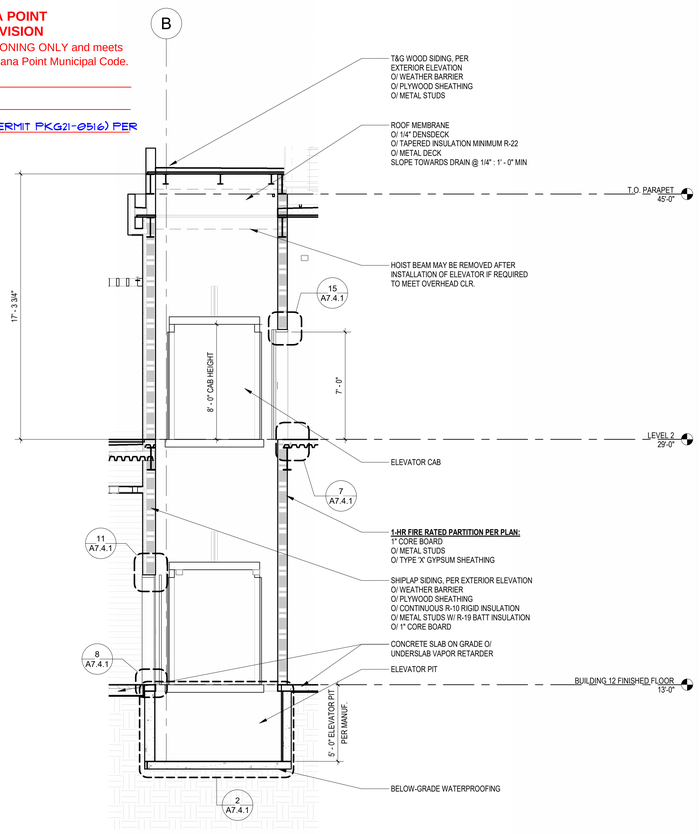

ELEVATOR SECTION 14
1/4" = 1'-0" A3.2.2 | A7.3.1

NOTE: REFER TO INTERIOR FINISH SCHEDULE ON SHEET A10.1.1 FOR ELEVATOR INTERIOR FINISHES

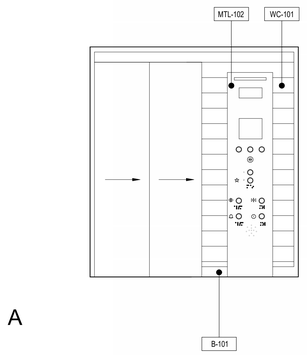

A

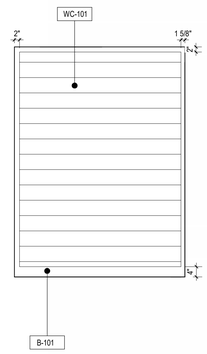

B

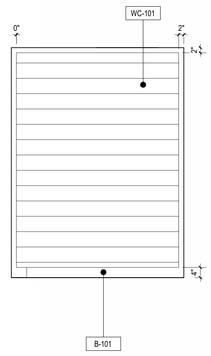

C

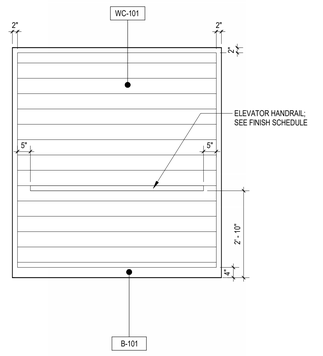

D

ELEVATOR CAB ELEVATIONS 6
1/2" = 1'-0" A7.3.1 | A7.3.1

Zoning: CanningK 11/13/2024

Building&Safety: OCPWAzarvandB 12/22/2025

Permits: BNR21-0246, ELE21-0853, MEC21-0514, PLB21-0900

County of Orange - OC Public Works
OC Development Services
APPROVED

This set of plans and specifications must be kept on the job at all times. It is unlawful to make any changes or alterations to these plans without written permission from OC Public Works, OC Development Services of Orange County. The stamping of these plan specifications SHALL NOT be held to permit or be an approval of the violation of any provisions of any County Ordinance or State law.

Hind Tahtabaee
BUILDING OFFICIAL

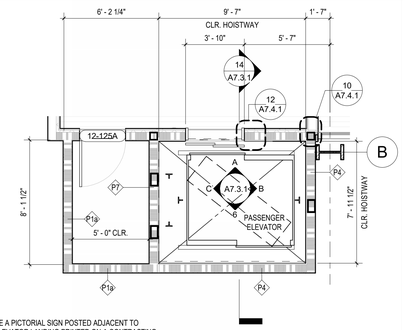

NOTE:
PROVIDE A PICTORIAL SIGN POSTED ADJACENT TO EACH ELEVATOR LANDING PRINTED ON A CONTRASTING BACKGROUND IN LETTERS NOT LESS THAN 5/8" HIGH TO READ: IN FIRE EMERGENCY, DO NOT USE ELEVATOR. USE EXIT STAIRS.

CAN BE USED AS MEDICAL EMERGENCY SERVICE ELEVATOR

ELEVATOR PLAN, LEVEL 1 2
1/4" = 1'-0" A2.0.1 | A7.3.1

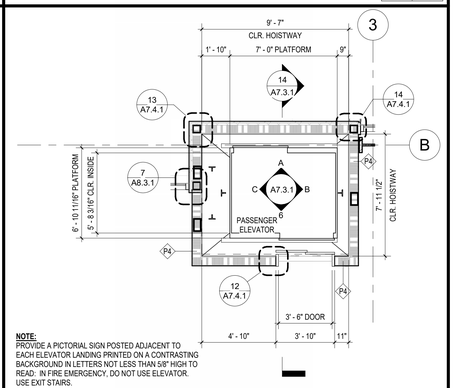

NOTE:
PROVIDE A PICTORIAL SIGN POSTED ADJACENT TO EACH ELEVATOR LANDING PRINTED ON A CONTRASTING BACKGROUND IN LETTERS NOT LESS THAN 5/8" HIGH TO READ: IN FIRE EMERGENCY, DO NOT USE ELEVATOR. USE EXIT STAIRS.

CAN BE USED AS MEDICAL EMERGENCY SERVICE ELEVATOR

ELEVATOR PLAN, LEVEL 2 3
1/4" = 1'-0" A2.0.2 | A7.3.1

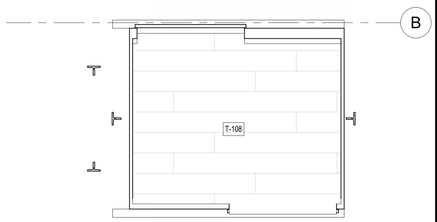

ELEVATOR PLAN, FINISH FLOOR PLAN 8
1/2" = 1'-0" A7.3.1

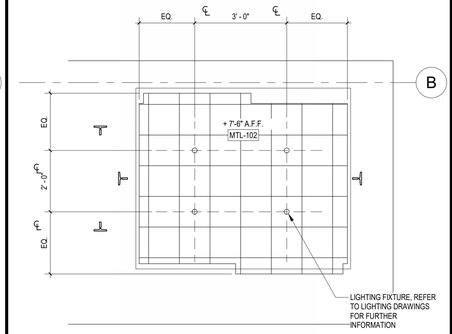

ELEVATOR REFLECTED CEILING PLAN 4
1/2" = 1'-0" A6.1.1 | A7.3.1

SMS ARCHITECTS
100 Progress | Suite 250
Irvine, California 92618
949.757.3240 | www.sms-arch.com

CONSTANT

DANA POINT HARBOR PARTNERS

PROJECT NAME
DANA POINT HARBOR COMMERCIAL CORE
BUILDING 12
1290 HARBOR WAY
DANA POINT, CA 92629

CLIENT
BURNHAM | WARD PROPERTIES
BWP

LICENSED ARCHITECT
BRANDON DEDMON
No. C-37432
11.30.23
Exp. Date
STATE OF CALIFORNIA

No.	DATE	ISSUE
	9/30/2022	50% SCHEMATIC DESIGN
	10/28/2022	100% SCHEMATIC DESIGN
	02/10/2023	100% DESIGN DEVELOPMENT
	03/17/2023	50% CONSTRUCTION DOCUMENTS
A	04/21/2023	COUNTY RESUBMITTAL
B	10/09/2024	CITY PLANNING RESUBMITTAL

DRAWINGS AND WRITTEN MATERIAL APPEARING HEREIN CONSTITUTE ORIGINAL AND UNPUBLISHED WORK OF SMS ARCHITECTS AND MAY NOT BE DUPLICATED, USED OR DISCLOSED WITHOUT WRITTEN CONSENT OF THE ARCHITECT

PROJECT NO. 22039

DATE JANUARY 25, 2023

DRAWING TITLE
ELEVATOR PLAN AND SECTIONS

DRAWING NO.
A7.3.1

C:\Users\Brandt\Documents\22039_DPH_Building 12-Arch_brandt@sms-arch.com.rvt

10/8/2024 5:12:14 PM

CITY OF DANA POINT
PLANNING DIVISION

This plan has been reviewed for ZONING ONLY and meets the requirements of Title 9 of the Dana Point Municipal Code.

APPROVED KBN

DATE 10/21/24

COMMENTS BUILDING 12 (OC PERMIT PKG21-0516) PER CDP13-0018(I).

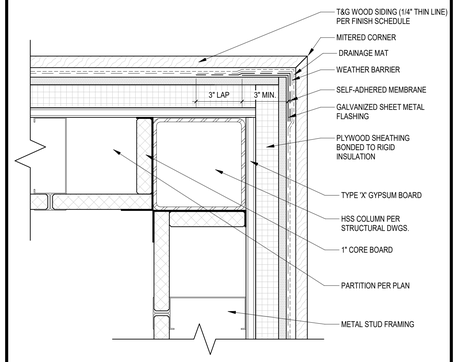

ELEVATOR WALL AT CORNER 13
3" = 1'-0" A7.3.1 A7.4.1

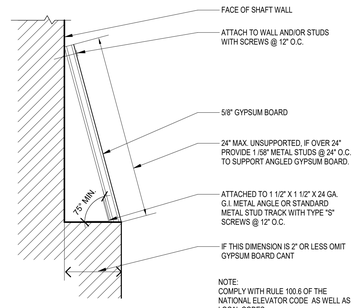

SAFETY CANT 9
3" = 1'-0" A7.4.1

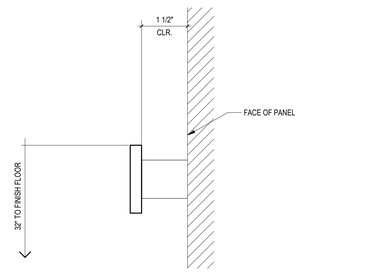

ELEVATOR HANDRAIL SECTION 5
6" = 1'-0" A7.4.1

Zoning: CanningK 11/13/2024

Building&Safety: OCPWAzarvandB 12/22/2025

Permits: BNR21-0246, ELE21-0853, MEC21-0514, PLB21-0900

County of Orange - OC Public Works
OC Development Services
APPROVED

This set of plans and specifications must be kept on the job at all times. It is unlawful to make any changes or alterations to these plans without written permission from OC Public Works, OC Development Services of Orange County. The stamping of these plan specifications SHALL NOT be held to permit or be an approval of the violation of any provisions of any County Ordinance or State law.

Hani Tahetshaee
BUILDING OFFICIAL

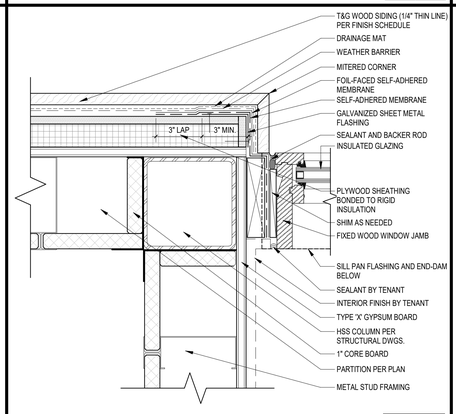

ELEVATOR WALL CORNER AT STOREFRONT 14
3" = 1'-0" A7.3.1 A7.4.1

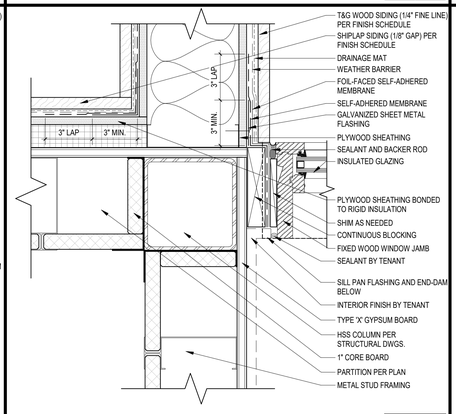

WOOD STOREFRONT AT ELEVATOR WALL 10
3" = 1'-0" A7.3.1 A7.4.1

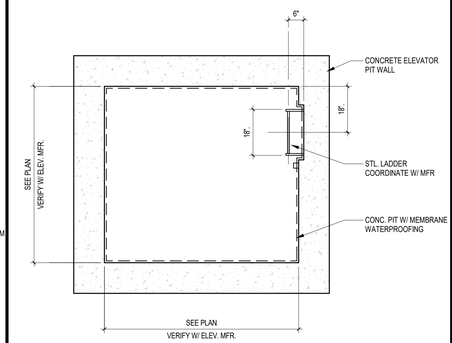

ELEVATOR PIT PLAN 6
1/2" = 1'-0" A7.4.1

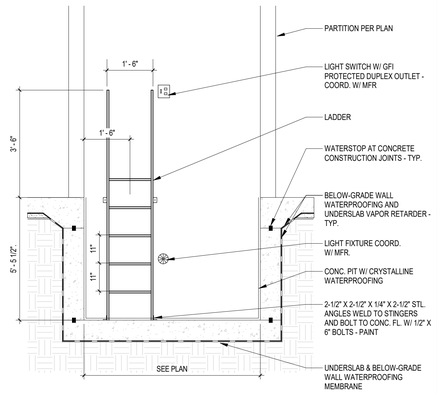

ELEVATOR PIT SECTION 2
1/2" = 1'-0" A7.3.1 A7.4.1

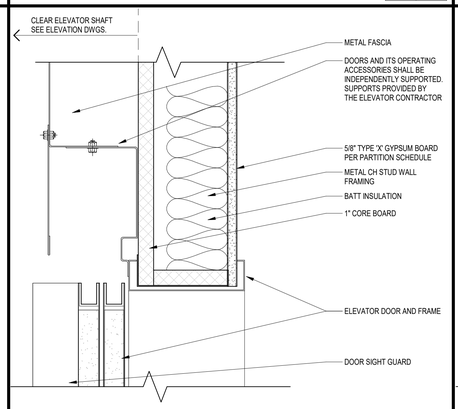

ELEVATOR DOOR HEAD 15
3" = 1'-0" A7.3.1 A7.4.1

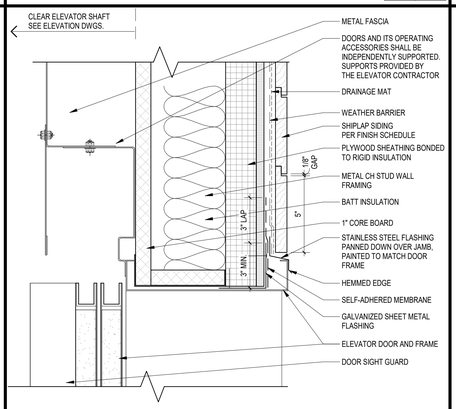

ELEVATOR DOOR HEAD @ EXTERIOR 11
3" = 1'-0" A7.3.1 A7.4.1

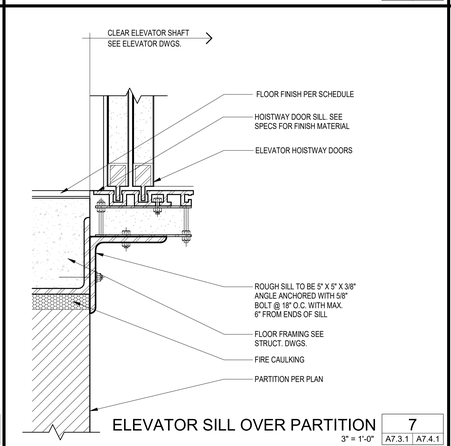

ELEVATOR SILL OVER PARTITION 7
3" = 1'-0" A7.3.1 A7.4.1

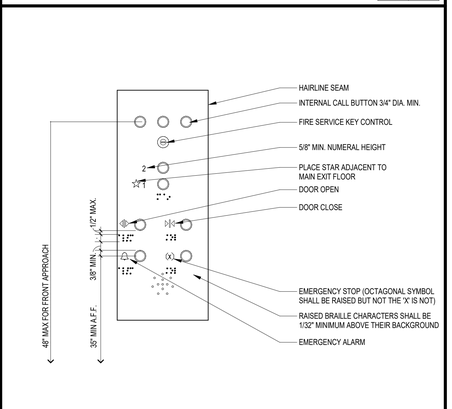

ELEVATOR CONTROL PANEL 3
1 1/2" = 1'-0" A7.4.1

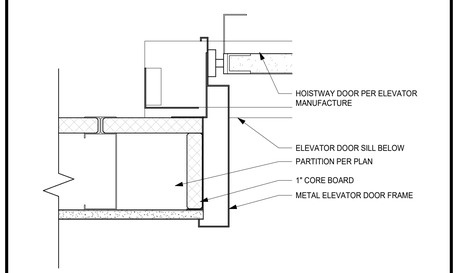

ELEVATOR DOOR JAMB 16
3" = 1'-0" A7.4.1

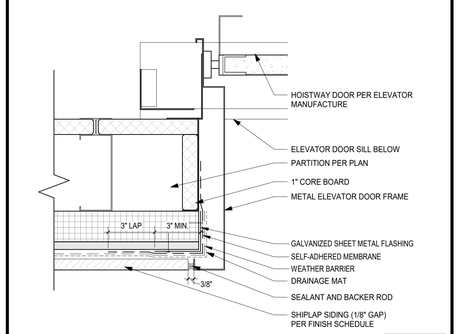

ELEVATOR DOOR JAMB @ EXTERIOR 12
3" = 1'-0" A7.3.1 A7.4.1

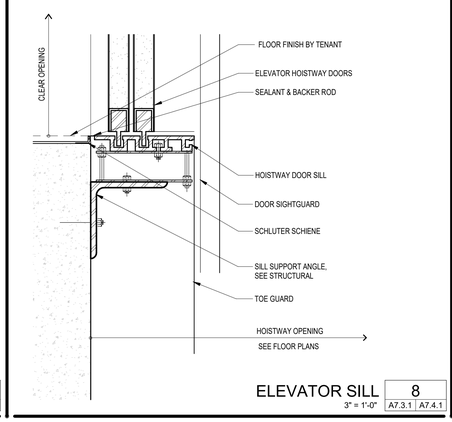

ELEVATOR SILL 8
3" = 1'-0" A7.3.1 A7.4.1

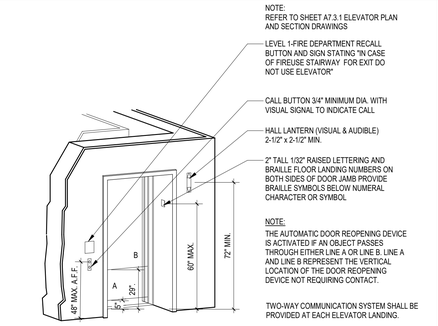

HOISTWAY AND ELEVATOR 4
1/4" = 1'-0" A7.4.1

SMS ARCHITECTS
100 Progress | Suite 250
Irvine, California 92618
949.757.3240 | www.sms-arch.com

CONSTANT

DANA POINT HARBOR PARTNERS

PROJECT NAME
DANA POINT HARBOR COMMERCIAL CORE
BUILDING 12
1290 HARBOR WAY
DANA POINT, CA 92629

CLIENT
BURNHAM | WARD PROPERTIES
BWP

No.	DATE	ISSUE
	10/28/2022	100% SCHEMATIC DESIGN
	02/10/2023	100% DESIGN DEVELOPMENT
	03/17/2023	50% CONSTRUCTION DOCUMENTS
A	04/21/2023	COUNTY RESUBMITTAL
B	10/09/2024	CITY PLANNING RESUBMITTAL

DRAWINGS AND WRITTEN MATERIAL APPEARING HEREIN CONSTITUTE ORIGINAL AND UNPUBLISHED WORK OF SMS ARCHITECTS AND MAY NOT BE DUPLICATED, USED OR DISCLOSED WITHOUT WRITTEN CONSENT OF THE ARCHITECT

PROJECT NO 22039

DATE JANUARY 25, 2023

DRAWING TITLE
ELEVATOR DETAILS

DRAWING NO.
A7.4.1

C:\Users\Brandt\Documents\22039_DPH_Building 12-Arch_brandt@sms-arch.com.rvt

10/8/2024 5:12:18 PM

CITY OF DANA POINT
PLANNING DIVISION

This plan has been reviewed for ZONING ONLY and meets the requirements of Title 9 of the Dana Point Municipal Code.

APPROVED KBN

DATE 10/21/24

COMMENTS BUILDING 12 (OC PERMIT PKG21-0516) PER CDP13-0018(I).

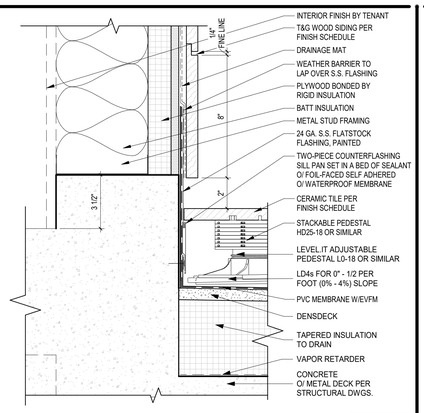

WALL @ METAL DECK (T&G) 9
3" = 1'-0" A2.0.2a A8.2.1

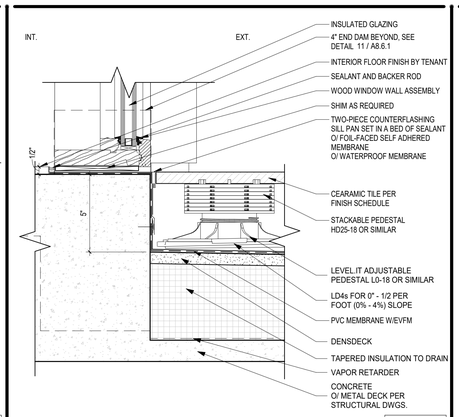

WINDOW WALL @ DECK 5
3" = 1'-0" A3.3.1 A8.2.1

Zoning: CanningK **11/13/2024**

Building&Safety: OCPWAzarvandB **12/22/2025**

Permits: BNR21-0246, ELE21-0853, MEC21-0514, PLB21-0900

County of Orange - OC Public Works
OC Development Services
APPROVED

This set of plans and specifications must be kept on the job at all times. It is unlawful to make any changes or alterations to these plans without written permission from OC Public Works, OC Development Services of Orange County. The stamping of these plan specifications SHALL NOT be held to permit or be an approval of the violation of any provisions of any County Ordinance or State law.

Hind Tahetsbane
BUILDING OFFICIAL

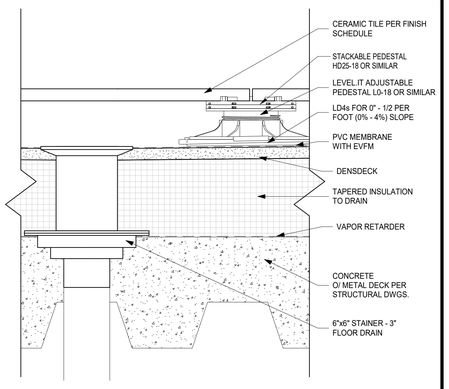

DECK DRAIN 10
3" = 1'-0" A2.0.2a A8.2.1

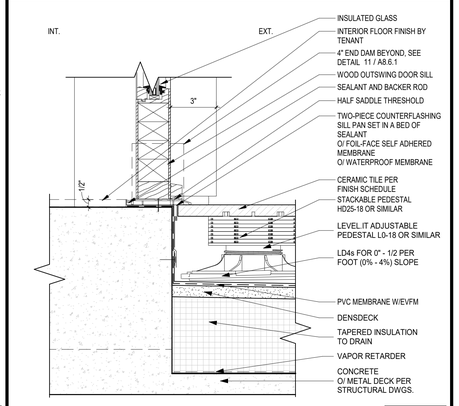

WD OUTSWING DOOR THRESHOLD @ DECK 6
3" = 1'-0" A8.2.1

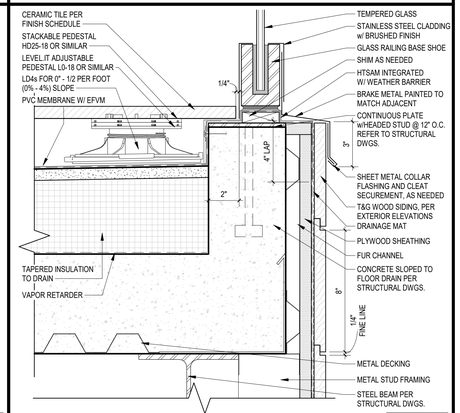

GLASS RAILING @ DECK 2
3" = 1'-0" A2.0.2 A8.2.1

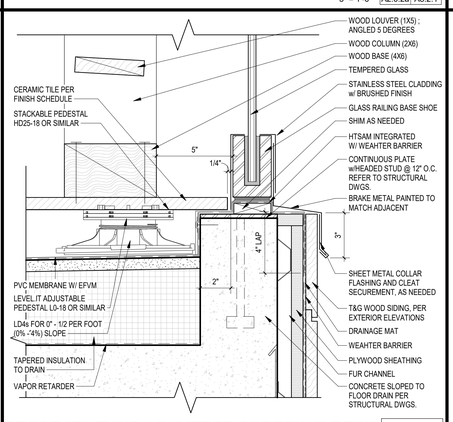

DECORATIVE WD LOUVERED SCREEN @ DECK 11
3" = 1'-0" A4.2.4 A8.2.1

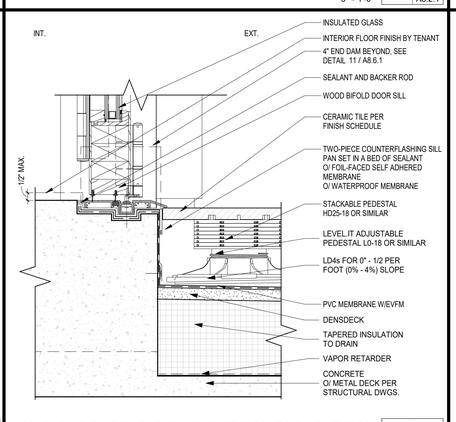

WD BI-FOLDING DOOR THRESHOLD @ DECK 7
3" = 1'-0" A3.3.1 A8.2.1

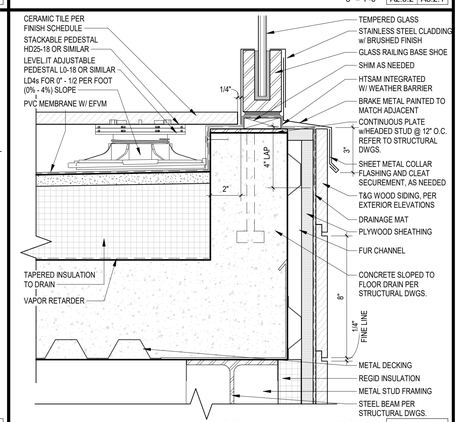

GLASS RAILING @ DECK 3
3" = 1'-0" A3.3.1 A8.2.1

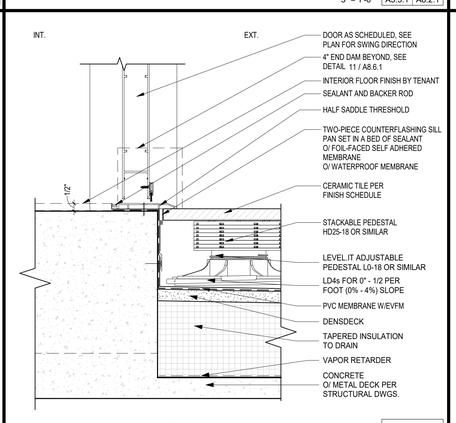

HM DOOR THRESHOLD @ DECK 8
3" = 1'-0" A3.3.1 A8.2.1

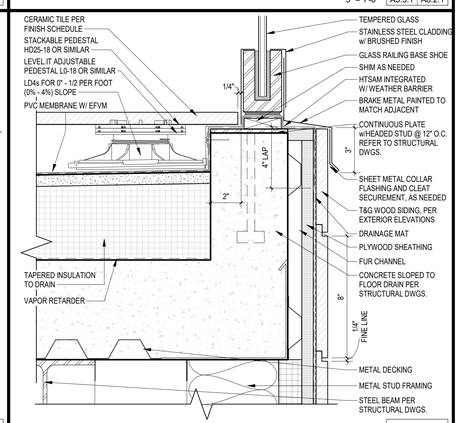

GLASS RAILING @ DECK 4
3" = 1'-0" A3.3.1 A8.2.1

SMS ARCHITECTS
100 Progress | Suite 250
Irvine, California 92618
949.757.3240 | www.sms-arch.com

CONSTANT

DANA POINT HARBOR PARTNERS

PROJECT NAME
DANA POINT HARBOR COMMERCIAL CORE
BUILDING 12
1290 HARBOR WAY
DANA POINT, CA 92629

CLIENT
BWP BURNHAM|WARD PROPERTIES

No.	DATE	ISSUE
	9/30/2022	50% SCHEMATIC DESIGN
	10/28/2022	100% SCHEMATIC DESIGN
	02/10/2023	100% DESIGN DEVELOPMENT
	03/17/2023	50% CONSTRUCTION DOCUMENTS
A	04/21/2023	COUNTY RESUBMITTAL
B	10/09/2024	CITY PLANNING RESUBMITTAL

DRAWINGS AND WRITTEN MATERIAL APPEARING HEREIN CONSTITUTE ORIGINAL AND UNPUBLISHED WORK OF SMS ARCHITECTS AND MAY NOT BE DUPLICATED, USED OR DISCLOSED WITHOUT WRITTEN CONSENT OF THE ARCHITECT

PROJECT NO 22039

DATE JANUARY 25, 2023

DRAWING TITLE
DECK DETAILS

DRAWING NO.
A8.2.1

C:\Users\Brandt\Documents\22039_DPH_Building 12-Arch_brandt@sms-arch.com.rvt

10/8/2024 5:12:23 PM

CITY OF DANA POINT
PLANNING DIVISION

This plan has been reviewed for ZONING ONLY and meets the requirements of Title 9 of the Dana Point Municipal Code.

APPROVED KBN

DATE 10/21/24

COMMENTS BUILDING 12 (CC PERMIT PKG21-0516) PER CDP13-0018(I).

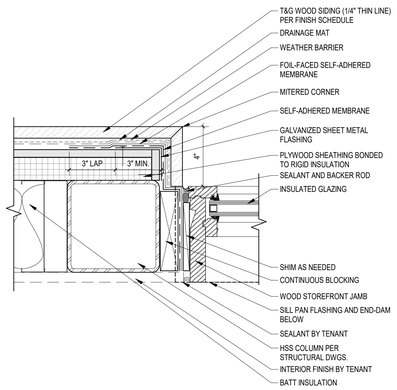

FIXED WOOD WINDOW AT WALL (T&G) 9
3" = 1'-0" A2.0.2 | A8.3.1

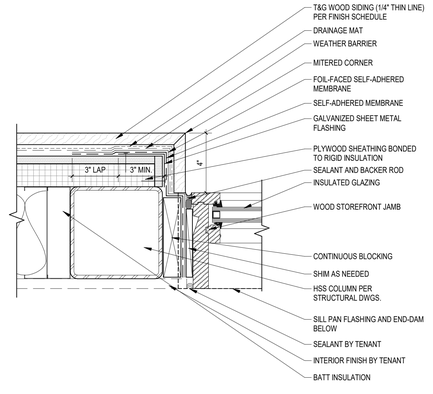

WOOD STOREFRONT AT WALL (T&G) 5
3" = 1'-0" A2.0.2 | A8.3.1

Zoning: CanningK 11/13/2024

Building&Safety: OCPWAzarvandB 12/22/2025

Permits: BNR21-0246, ELE21-0853, MEC21-0514, PLB21-0900

County of Orange - OC Public Works
OC Development Services
APPROVED

This set of plans and specifications must be kept on the job at all times. It is unlawful to make any changes or alterations to these plans without written permission from OC Public Works/ OC Development Services of Orange County. The stamping of these plan specifications SHALL NOT be held to permit or be an approval of the violation of any provisions of any County Ordinance or State law.

Hani Tahsbsaee
BUILDING OFFICIAL

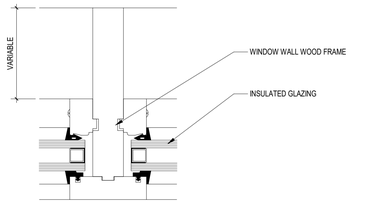

WINDOW WALL MULLION 10
6" = 1'-0" A2.0.2 | A8.3.1

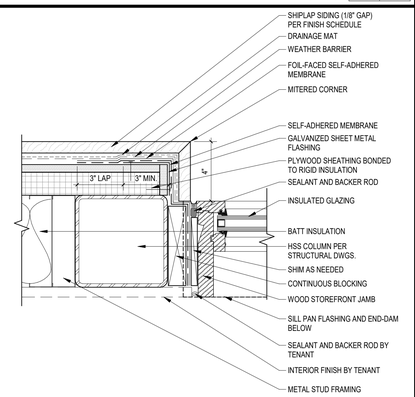

WOOD WINDOW AT WALL (Shiplap) 6
3" = 1'-0" A4.2.1 | A8.3.1

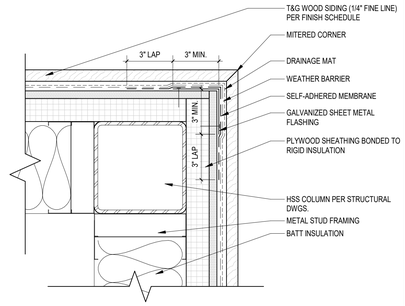

CORNER WALL CONNECTION (T&G) 2
3" = 1'-0" A2.0.1 | A8.3.1

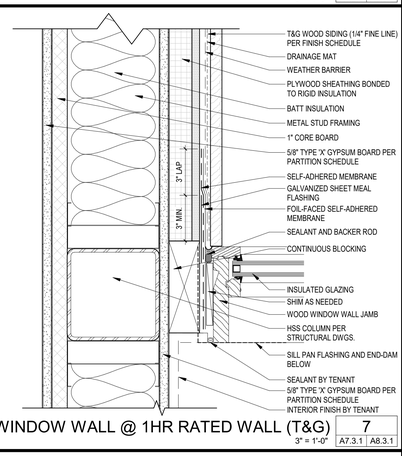

WD WINDOW WALL @ 1HR RATED WALL (T&G) 7
3" = 1'-0" A7.3.1 | A8.3.1

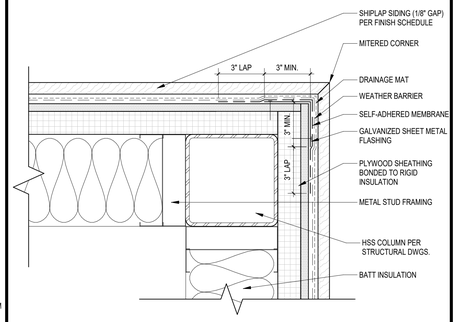

CORNER WALL CONNECTION (Shiplap) 3
3" = 1'-0" A7.1.1 | A8.3.1

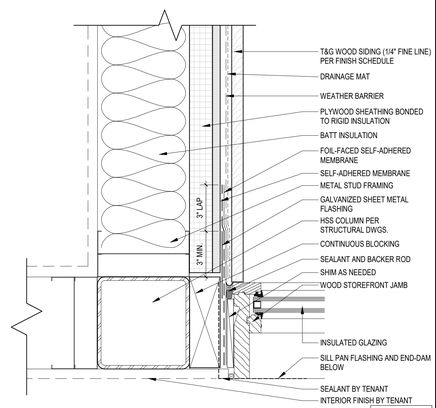

WOOD WINDDOW WALL AT CORNER (T&G) 8
3" = 1'-0" A2.0.2 | A8.3.1

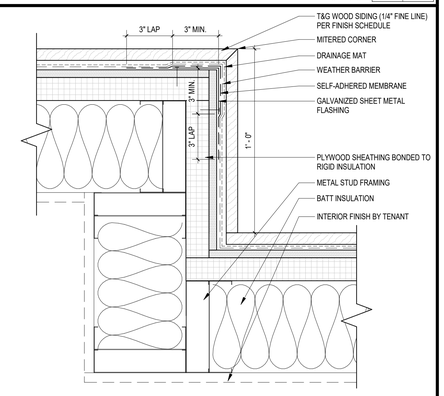

CORNER WALL CONNECTION (T&G) 4
3" = 1'-0" A2.0.2 | A8.3.1

SMS ARCHITECTS
100 Progress | Suite 250
Irvine, California 92618
949.757.3240 | www.sms-arch.com

CONSTANT

DANA POINT HARBOR PARTNERS

PROJECT NAME
DANA POINT HARBOR COMMERCIAL CORE
BUILDING 12
1290 HARBOR WAY
DANA POINT, CA 92629

CLIENT
BWP BURNHAM|WARD PROPERTIES

LICENSED ARCHITECT
BRANDON DEDMON
No. C-37432
11.30.23
Exp. Date
STATE OF CALIFORNIA

No.	DATE	ISSUE
	9/30/2022	50% SCHEMATIC DESIGN
	10/28/2022	100% SCHEMATIC DESIGN
	02/10/2023	100% DESIGN DEVELOPMENT
	03/17/2023	50% CONSTRUCTION DOCUMENTS
A	04/21/2023	COUNTY RESUBMITTAL
B	10/09/2024	CITY PLANNING RESUBMITTAL

DRAWINGS AND WRITTEN MATERIAL APPEARING HEREIN CONSTITUTE ORIGINAL AND UNPUBLISHED WORK OF SMS ARCHITECTS AND MAY NOT BE DUPLICATED, USED OR DISCLOSED WITHOUT WRITTEN CONSENT OF THE ARCHITECT

PROJECT NO 22039

DATE JANUARY 25, 2023

DRAWING TITLE
PLAN DETAILS

DRAWING NO.
A8.3.1

C:\Users\Brandt\Documents\22039_DPH_Building 12-Arch_brandt@sms-arch.com.rvt

10/8/2024 5:12:26 PM

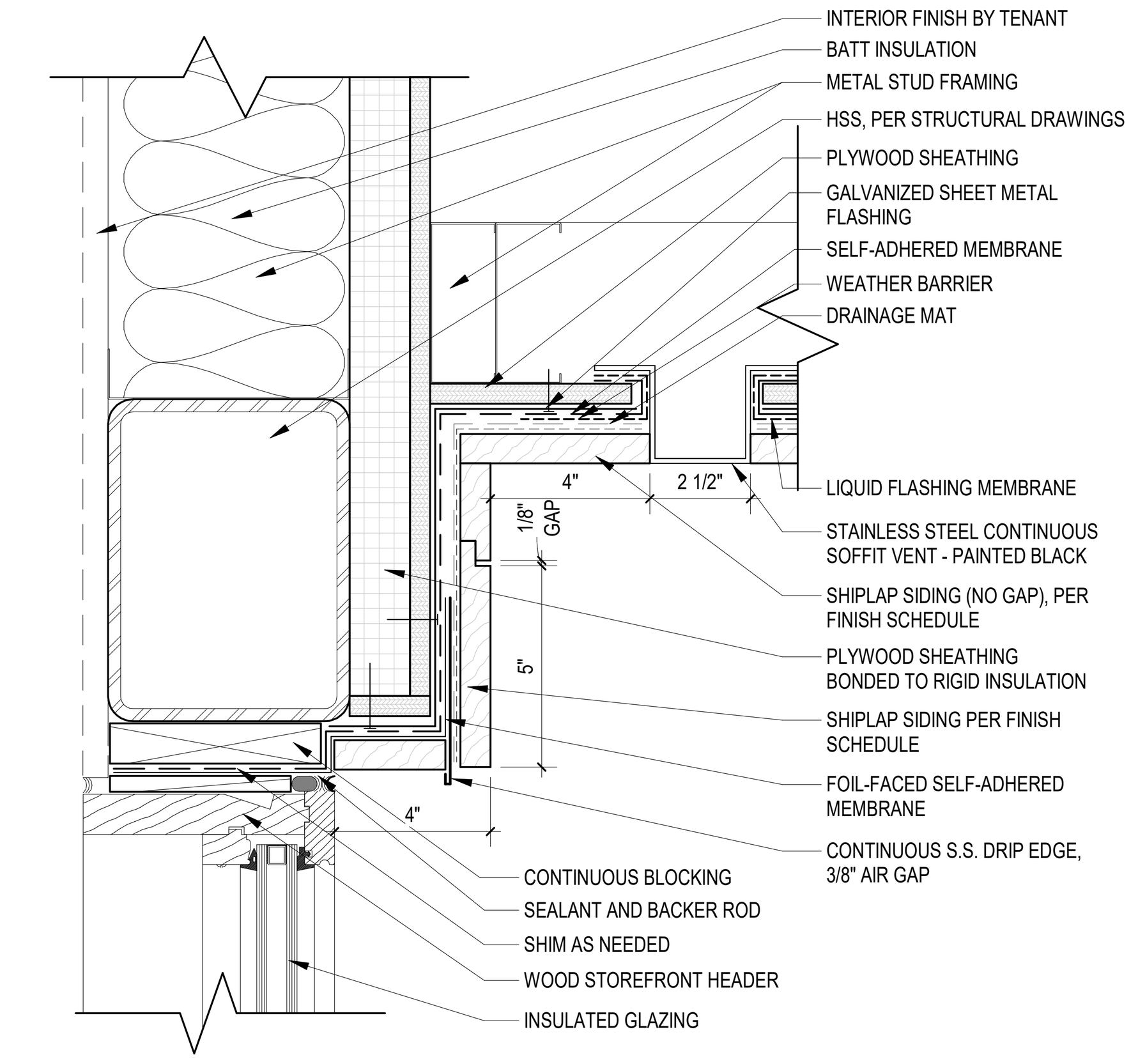

WOOD STOREFRONT @ WALL (SHIPLAP) 17
3" = 1'-0" A3.3.1 A8.4.1

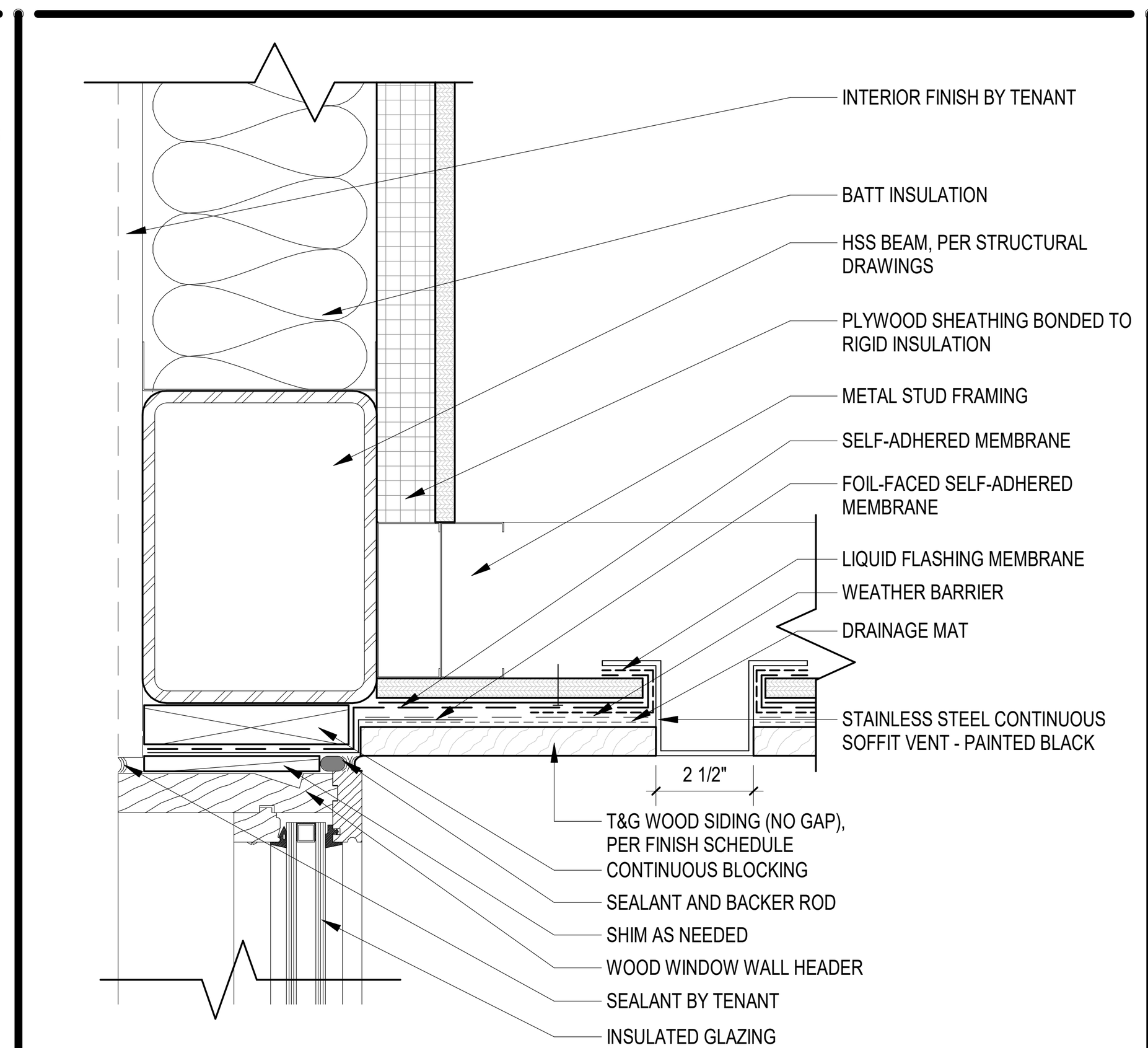

SOFFIT @ WOOD STOREFRONT (T&G) 13
3" = 1'-0" A3.3.1 A8.4.1

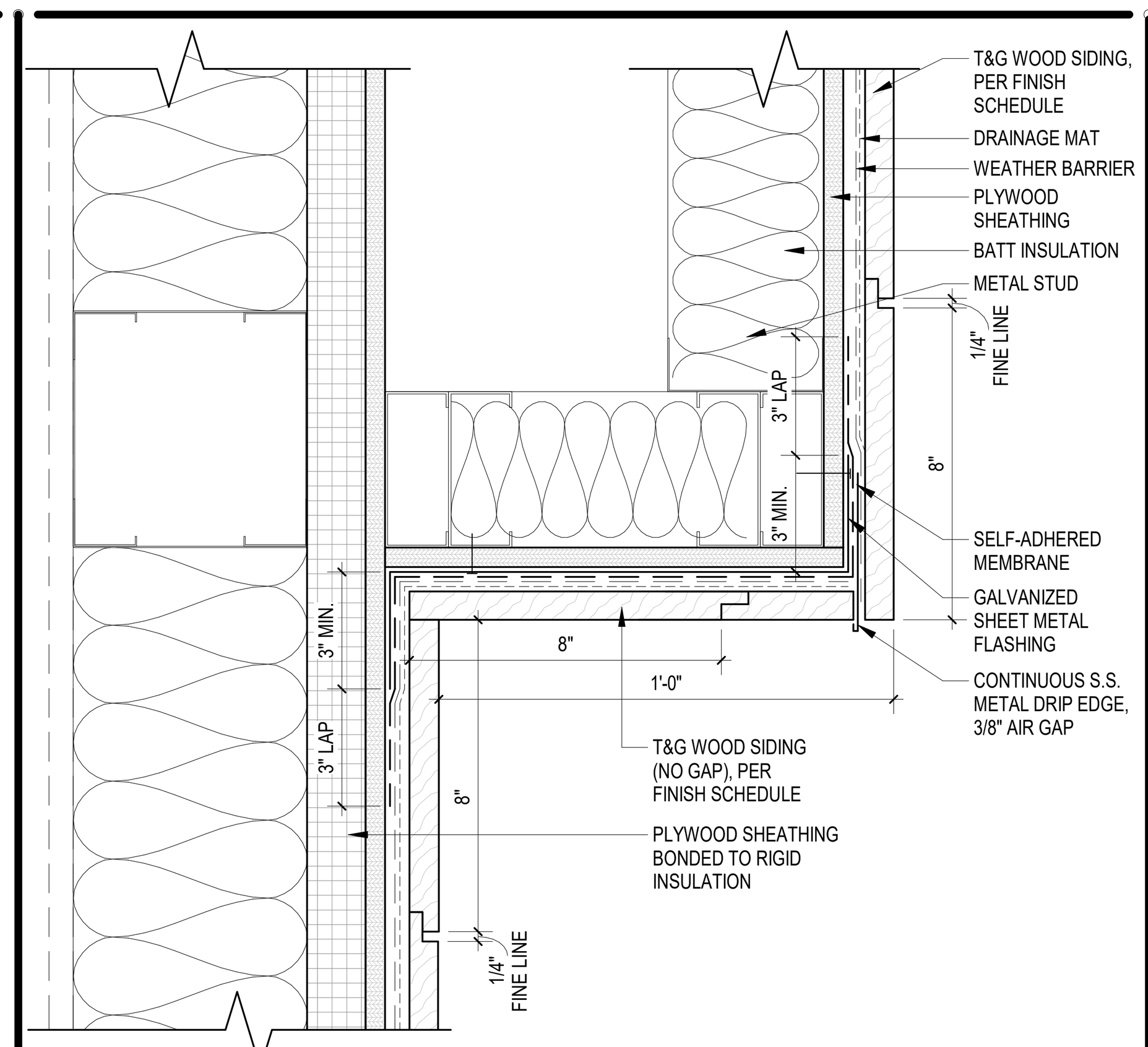

SOFFIT @ WALL (T&G) 9
3" = 1'-0" A3.3.1 A8.4.1

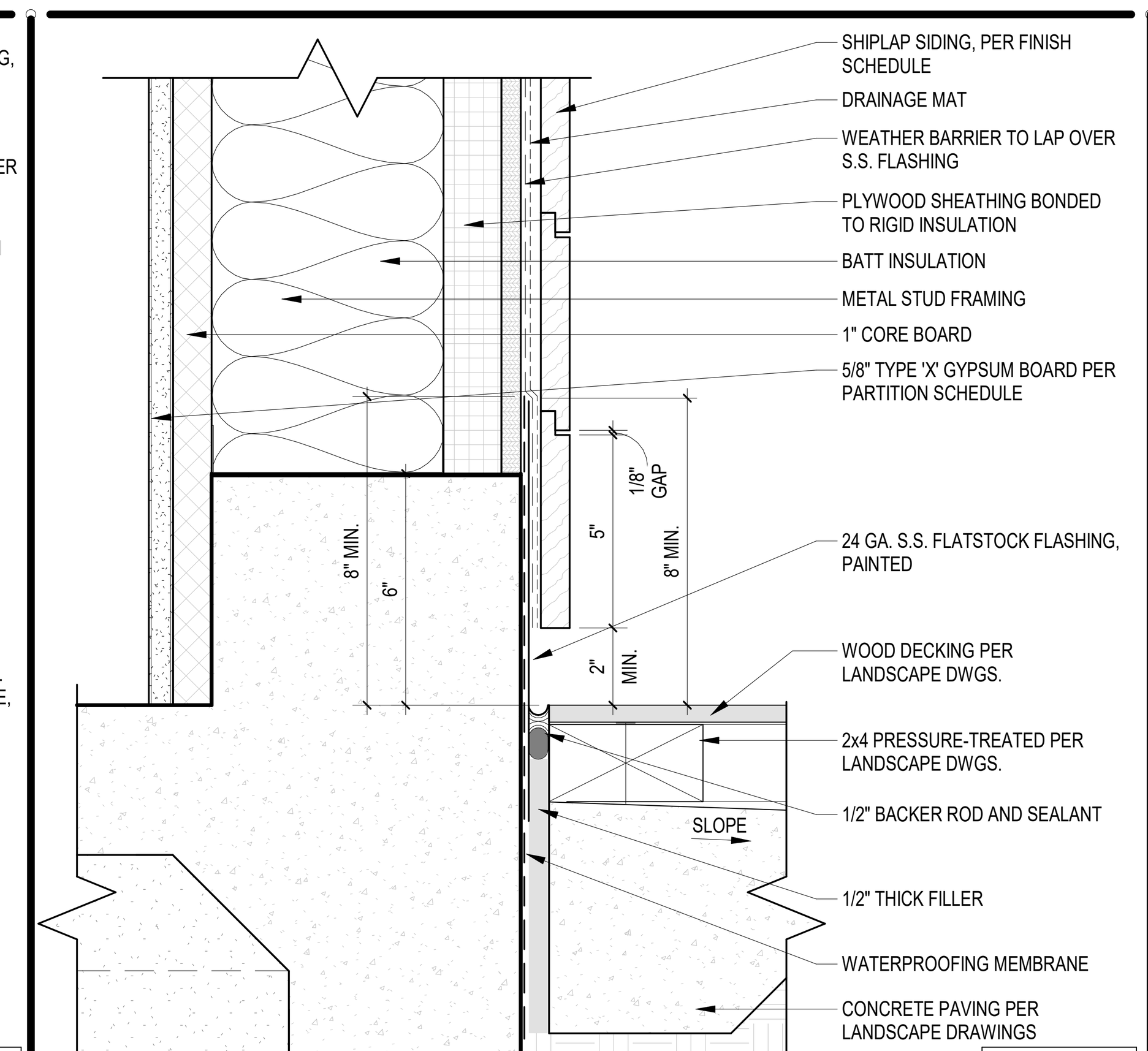

1-HR RATED WALL @ GRADE (Shiplap) 5
3" = 1'-0" A3.3.1 A8.4.1

Zoning: CanningK 11/13/2024

Building&Safety: OCPWAzarvandB 12/22/2025

Permits: BNR21-0246, ELE21-0853, MEC21-0514, PLB21-0900

County of Orange - OC Public Works
OC Development Services
APPROVED

This set of plans and specifications must be kept on the job at all times. It is unlawful to make any changes or alterations to these plans without written permission from OC Public Works, OC Development Services of Orange County. The stamping of these plan specifications SHALL NOT be held to permit or be an approval of the violation of any provisions of any County Ordinance or State law.
Hadi Tabatabaee
BUILDING OFFICIAL

CITY OF DANA POINT
PLANNING DIVISION
This plan has been reviewed for ZONING ONLY and meets the requirements of Title 9 of the Dana Point Municipal Code.
APPROVED KBN
DATE 10/21/24
COMMENTS BUILDING 12 (OC PERMIT PKG21-0516) PER CDP13-0018(I).

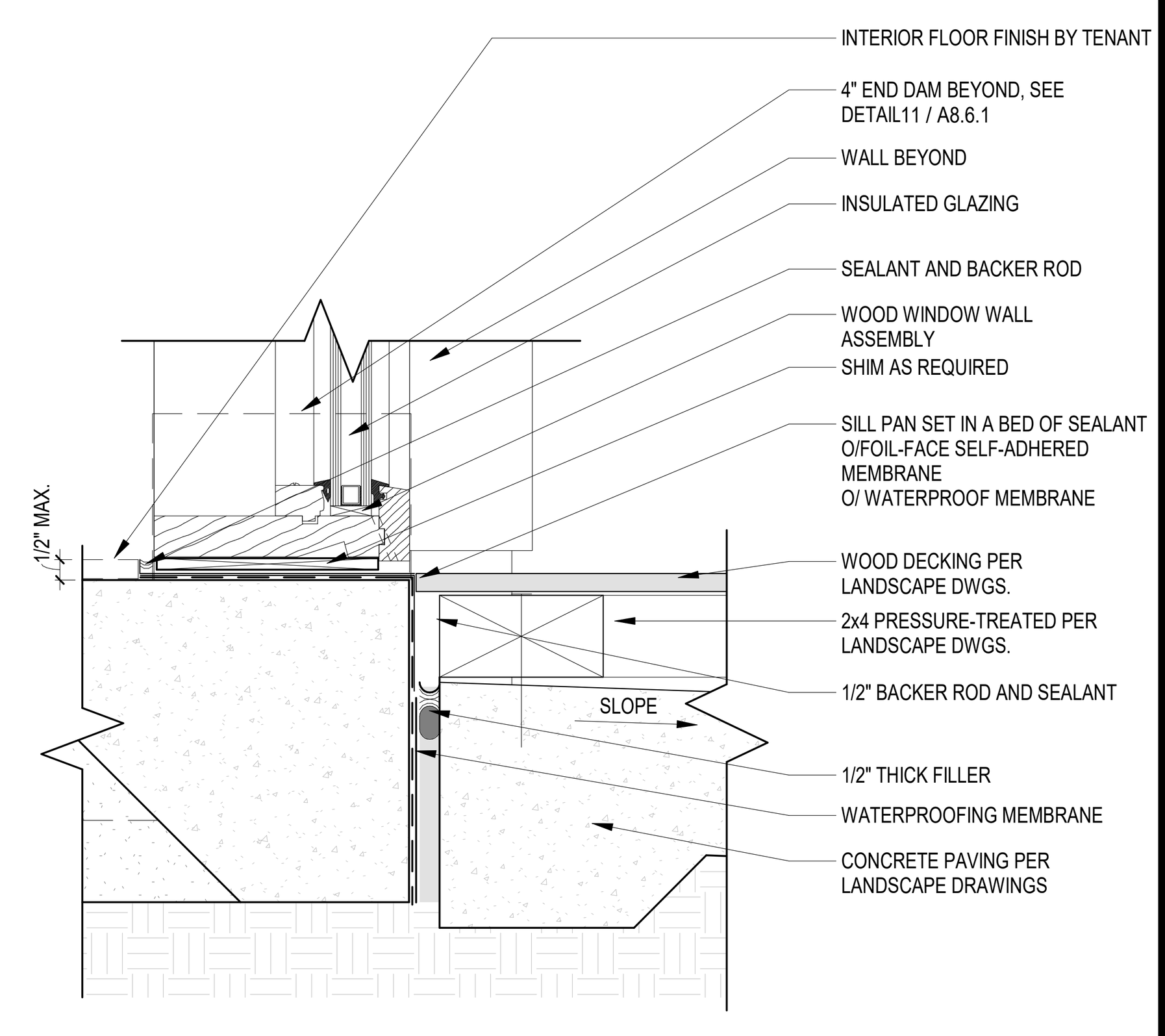

WOOD STOREFRONT @ GRADE 18
3" = 1'-0" A3.3.1 A8.4.1

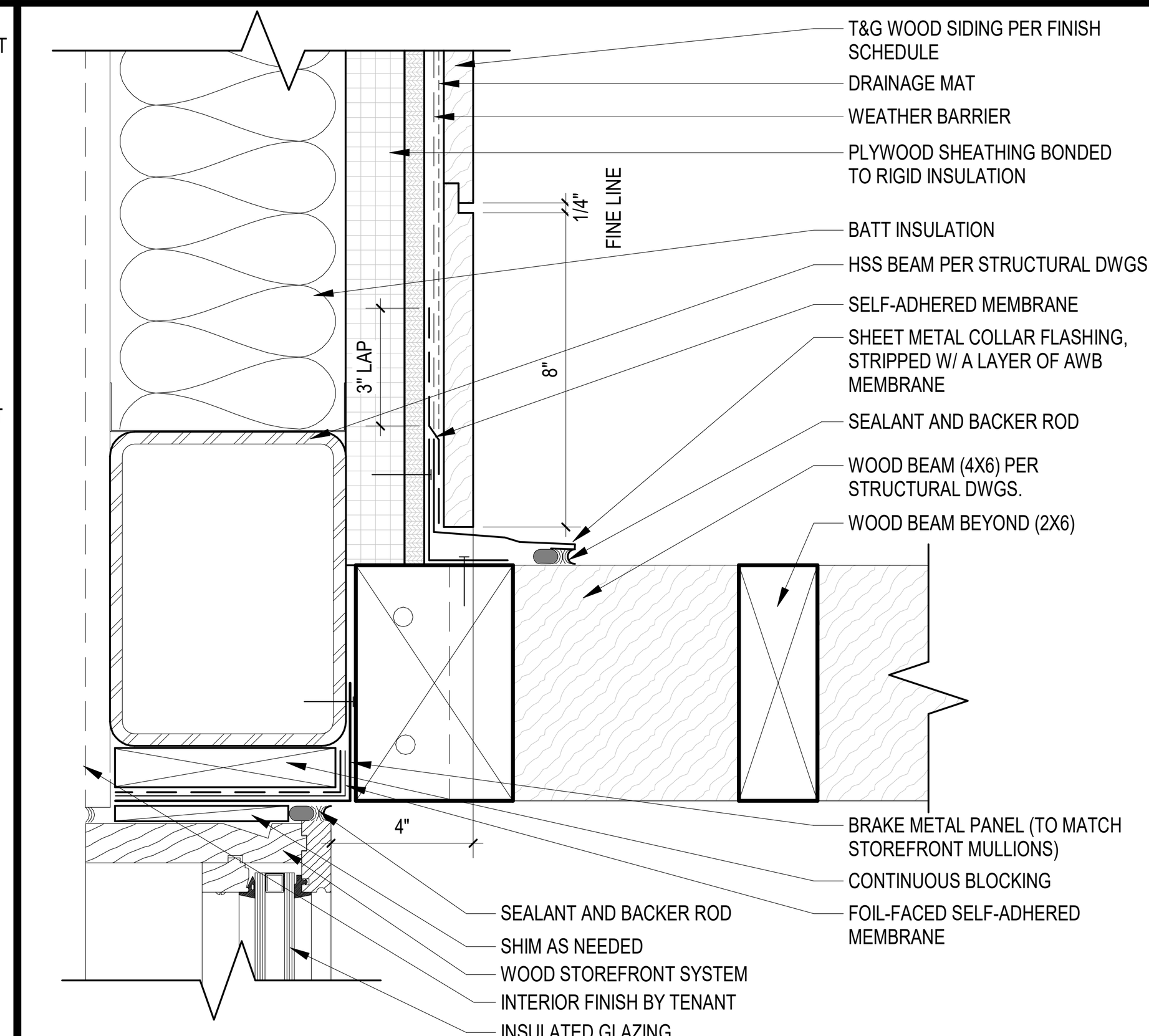

WOOD LOUVERED CANOPY @ WOOD STOREFRONT (T&G) 14
3" = 1'-0" A3.3.1 A8.4.1

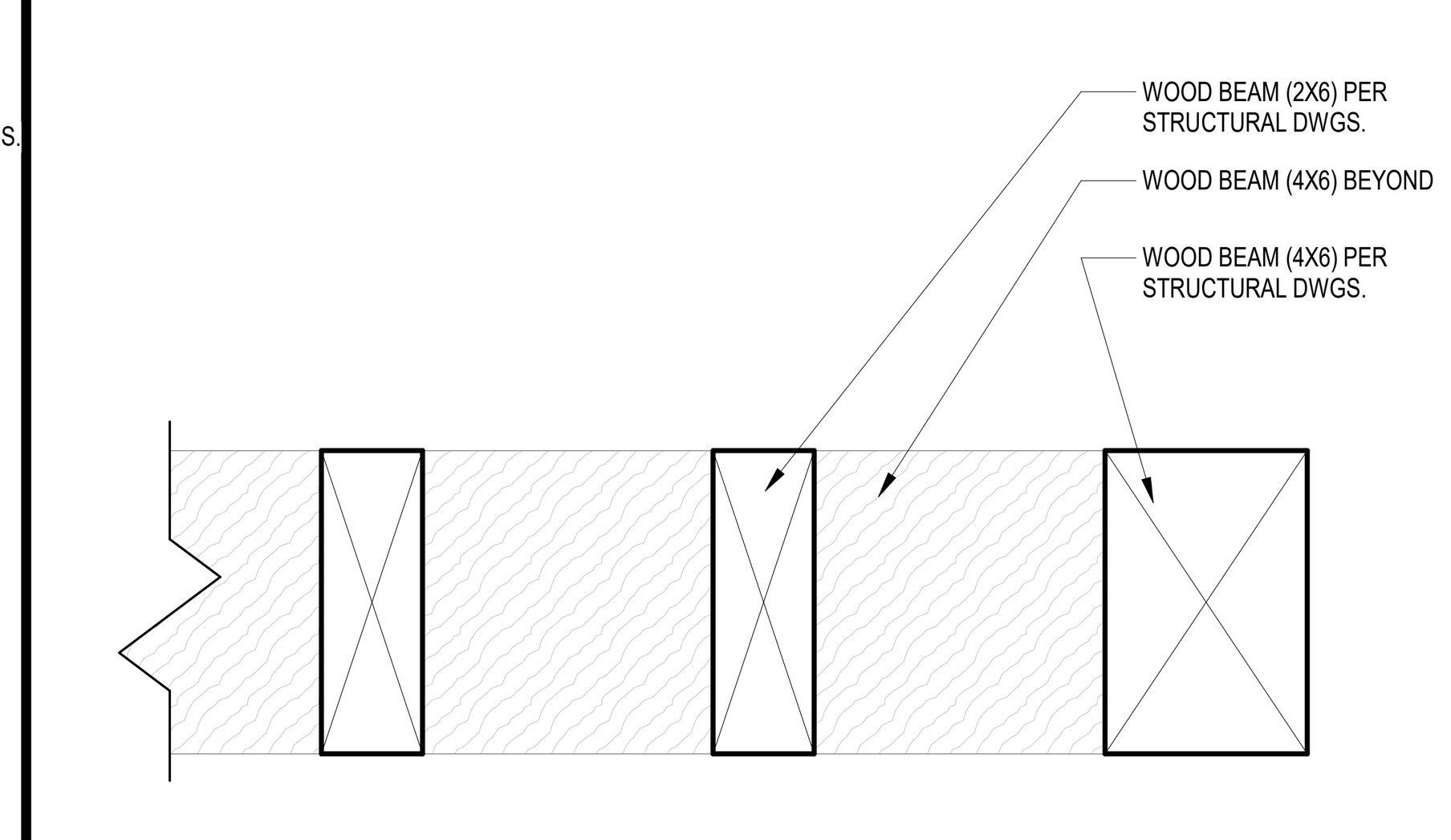

WOOD LOUVERED CANOPY EDGE 10
3" = 1'-0" A3.3.1 A8.4.1

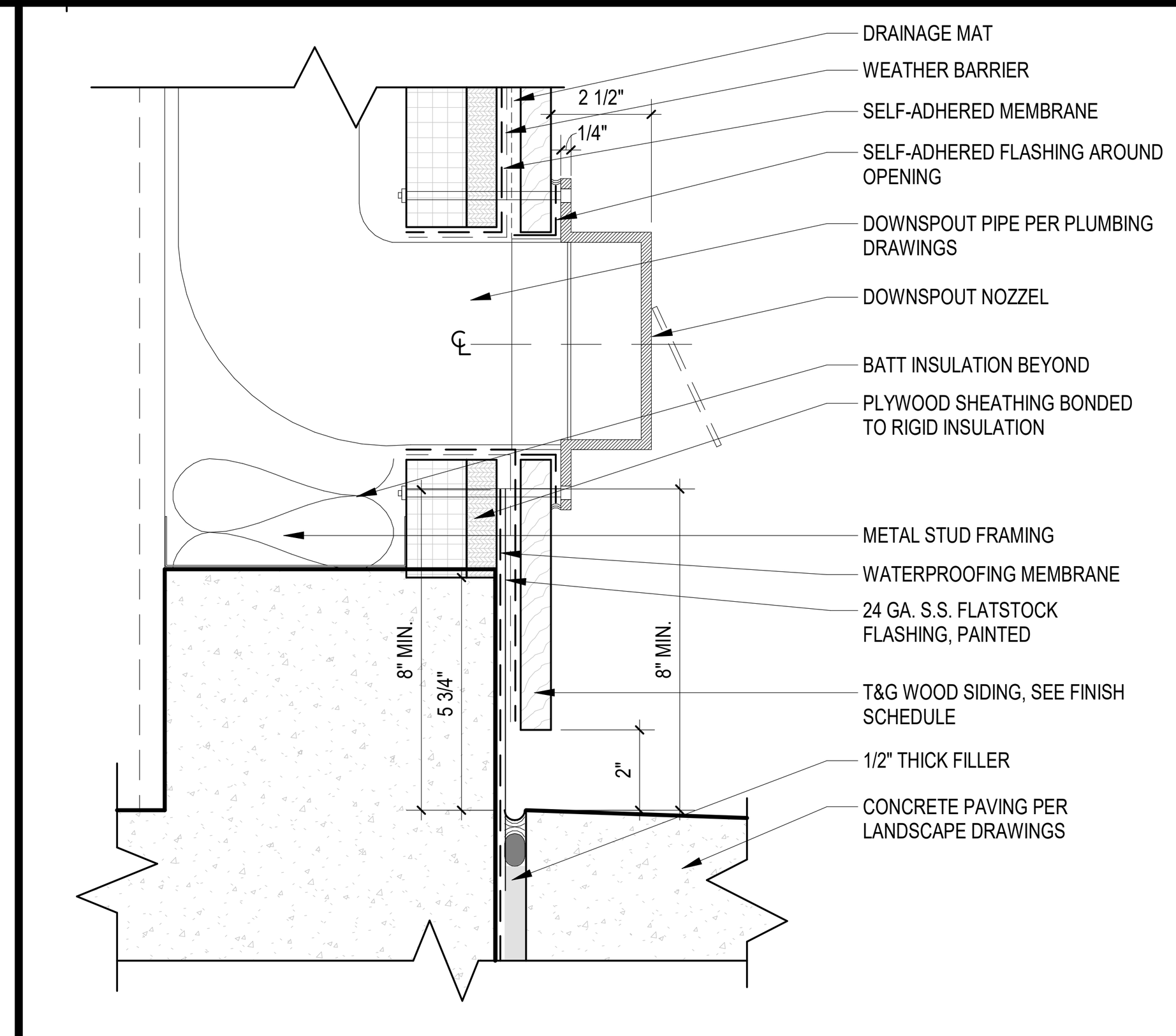

DOWNSPOUT NOZZLE 6
3" = 1'-0" A3.1.1 A8.4.1

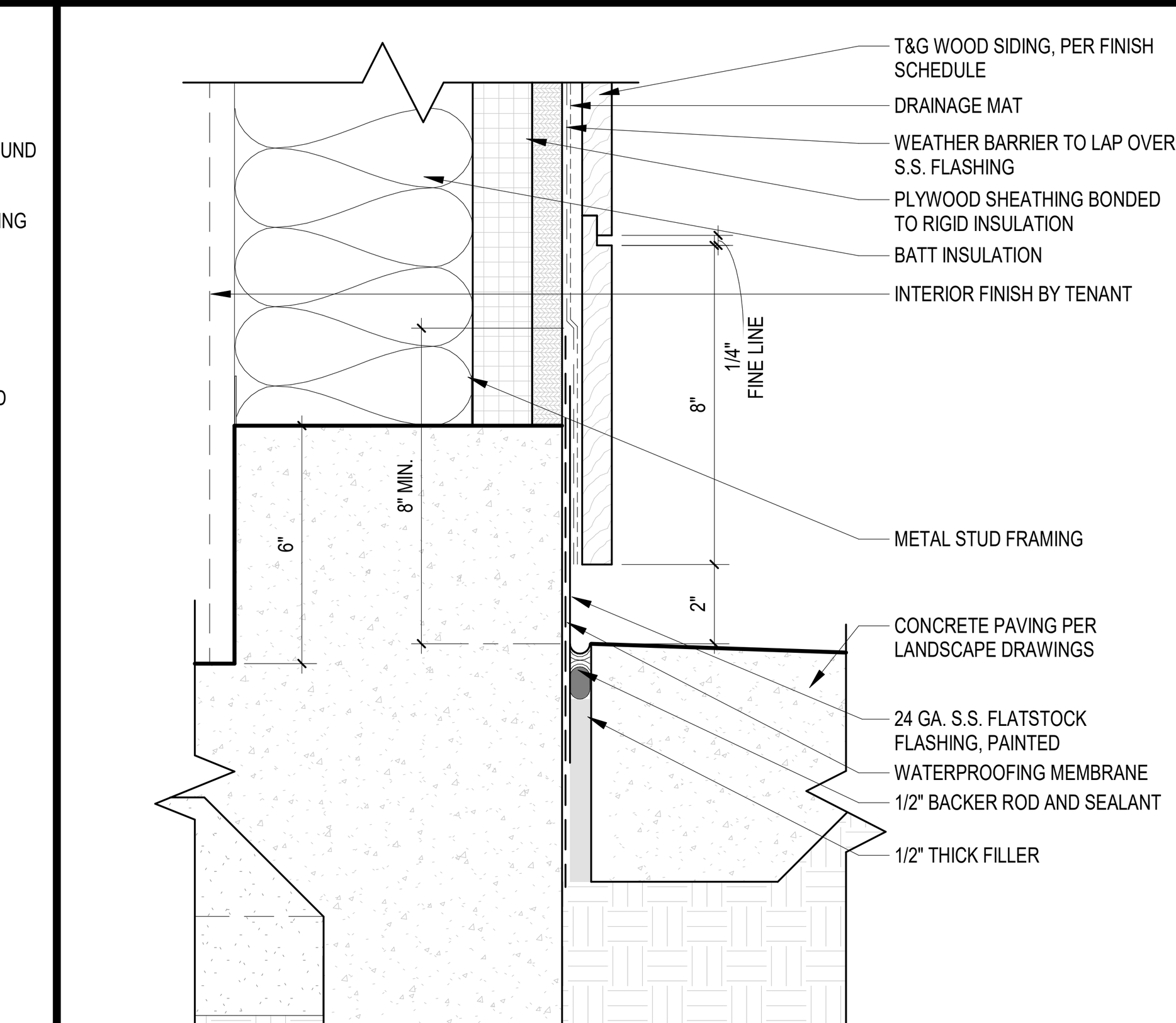

WALL @ GRADE (T&G) 2
3" = 1'-0" A3.3.2 A8.4.1

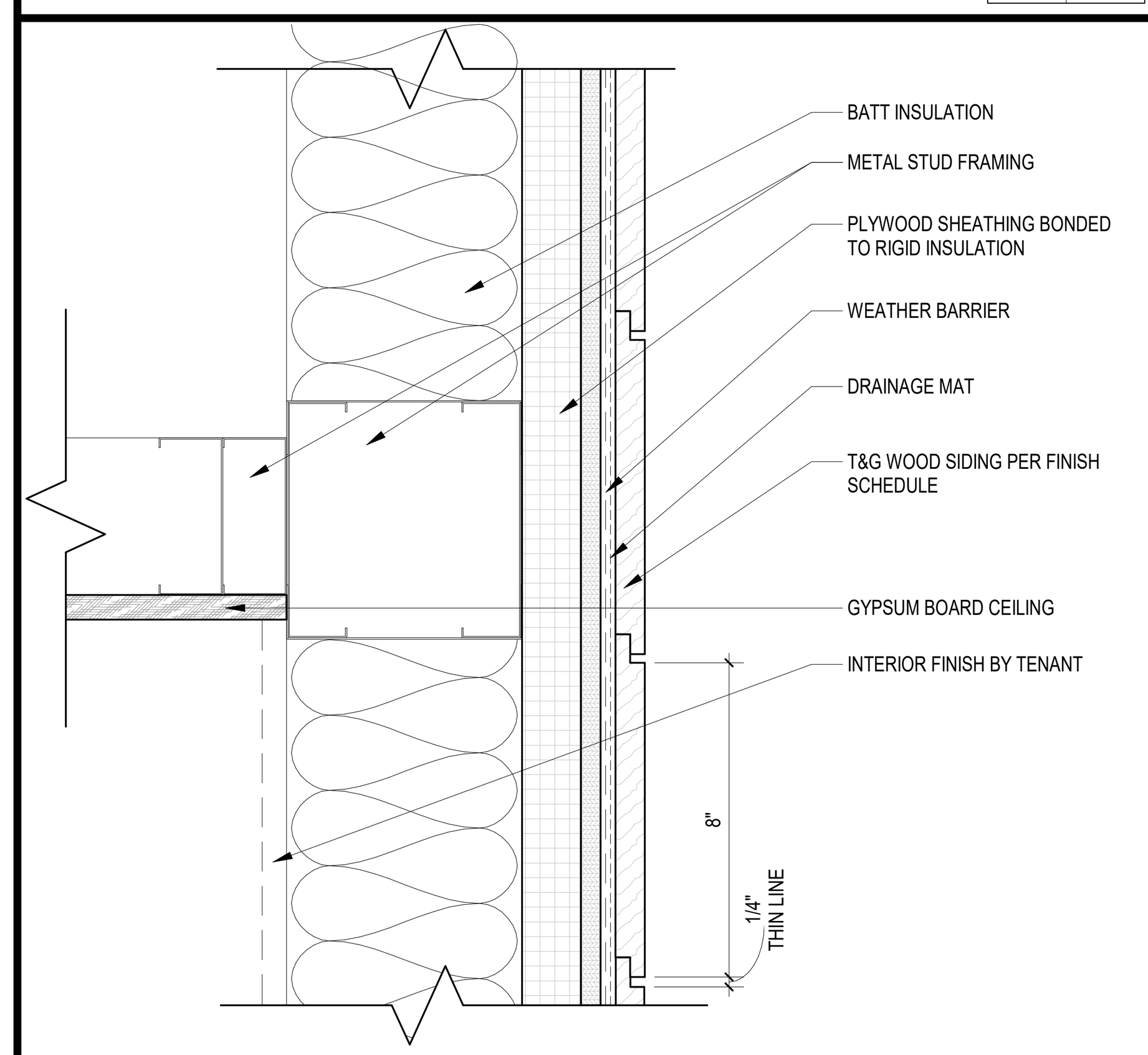

CEILING @ WALL (T&G) 19
3" = 1'-0" A8.4.1

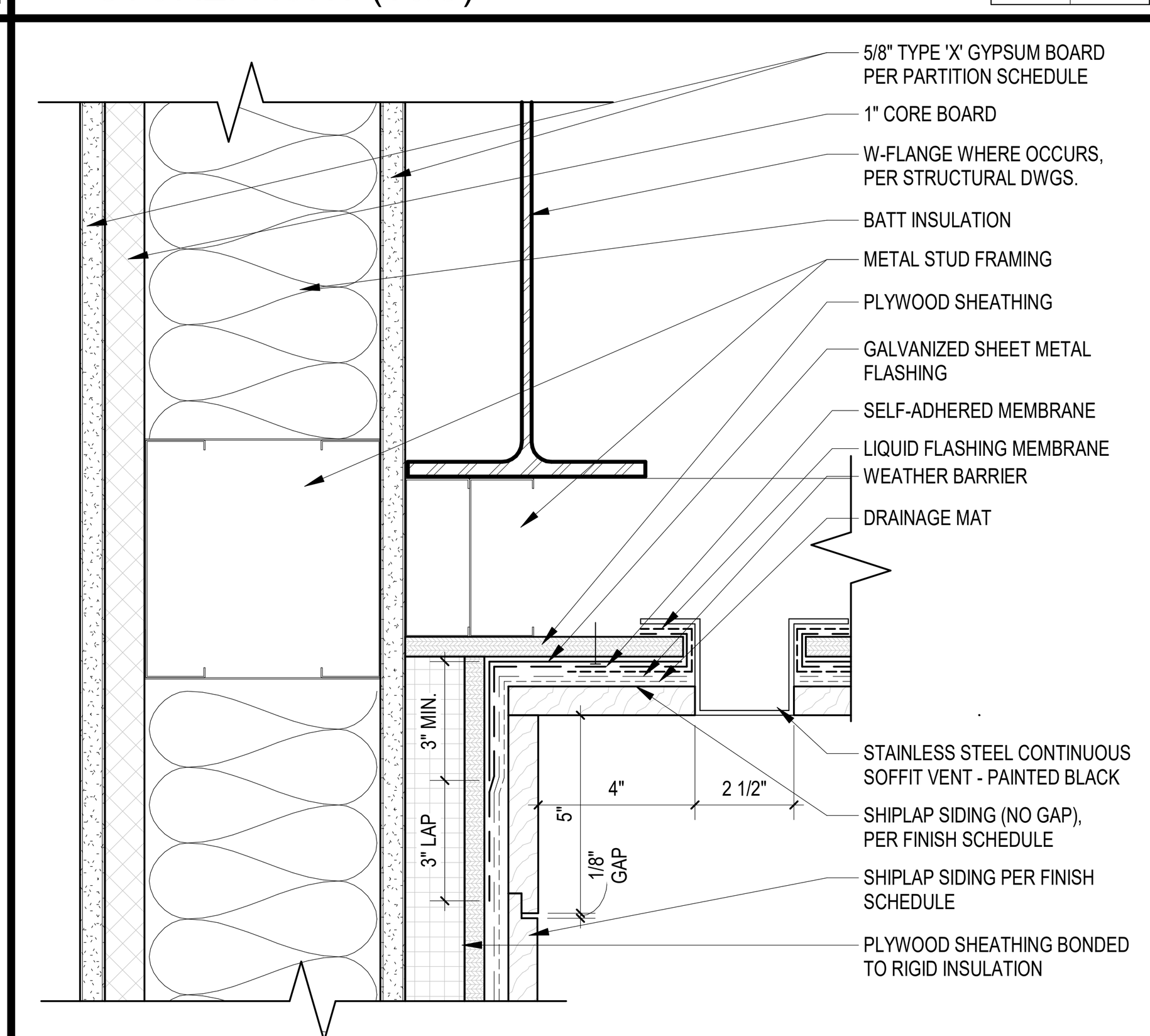

SOFFIT @ 1-HR RATED WALL (Shiplap) 15
3" = 1'-0" A3.3.1 A8.4.1

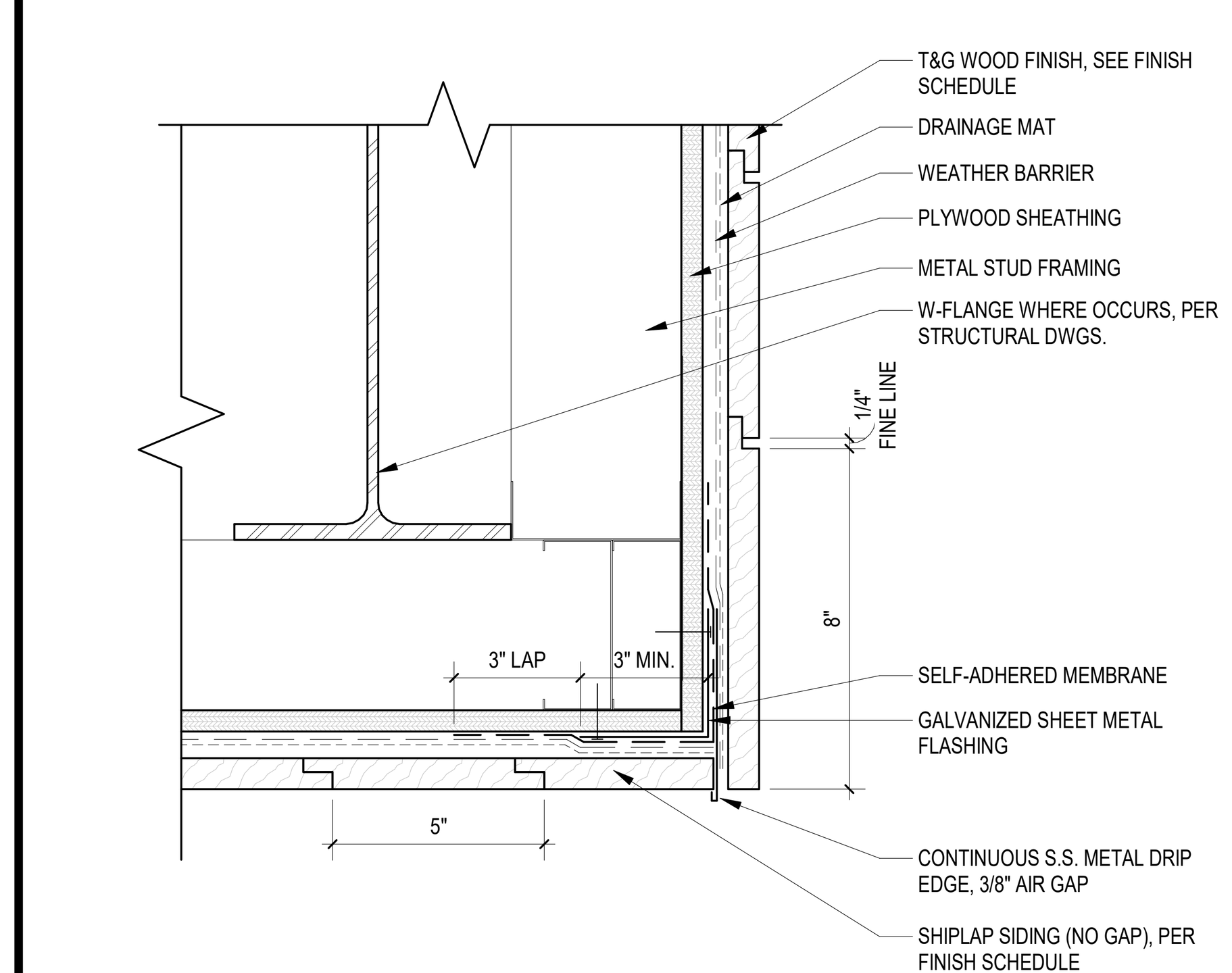

SOFFIT EDGE (Shiplap + T&G) 11
3" = 1'-0" A3.3.1 A8.4.1

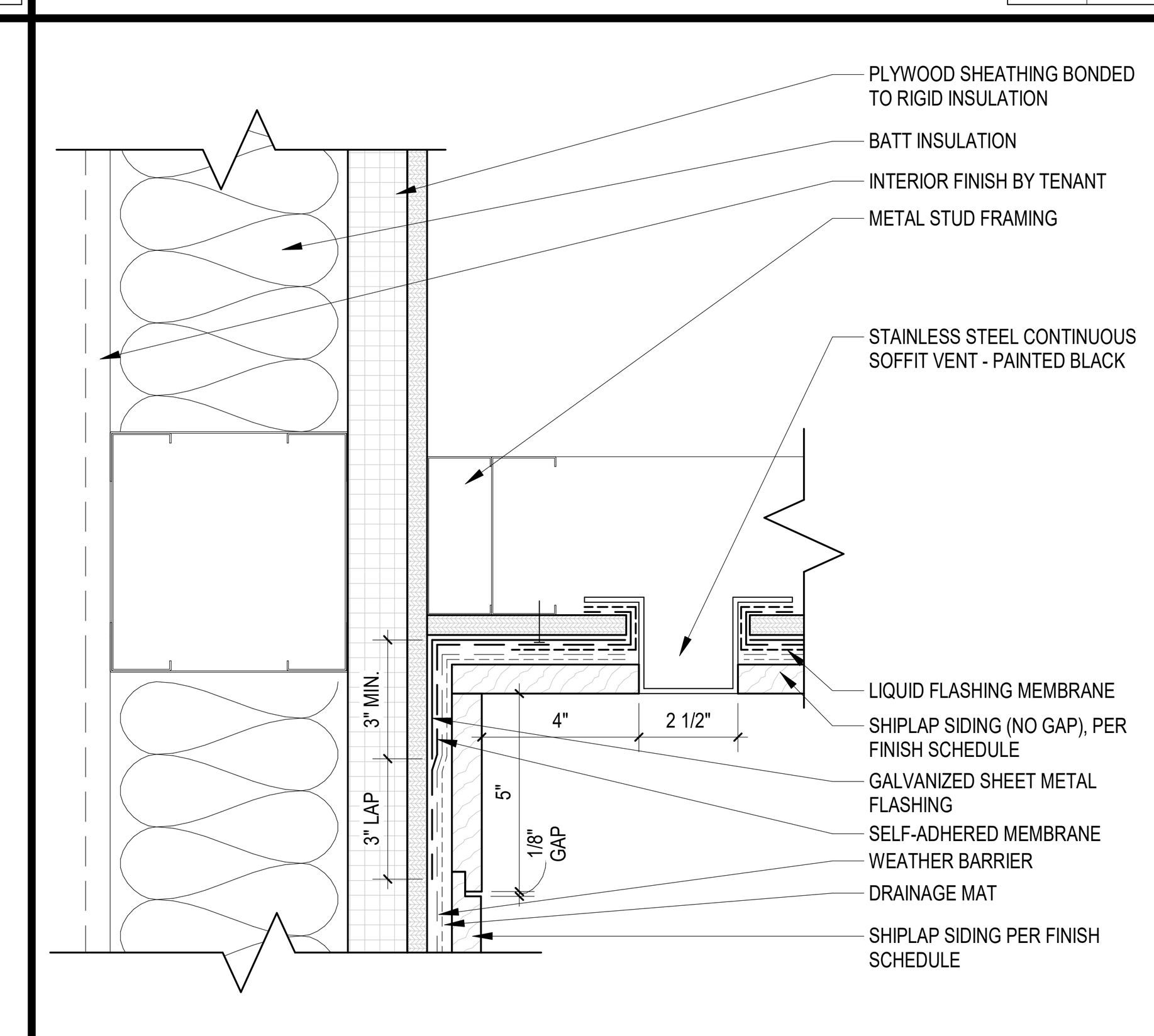

SOFFIT w/ VENT (Shiplap) 7
3" = 1'-0" A3.3.2 A8.4.1

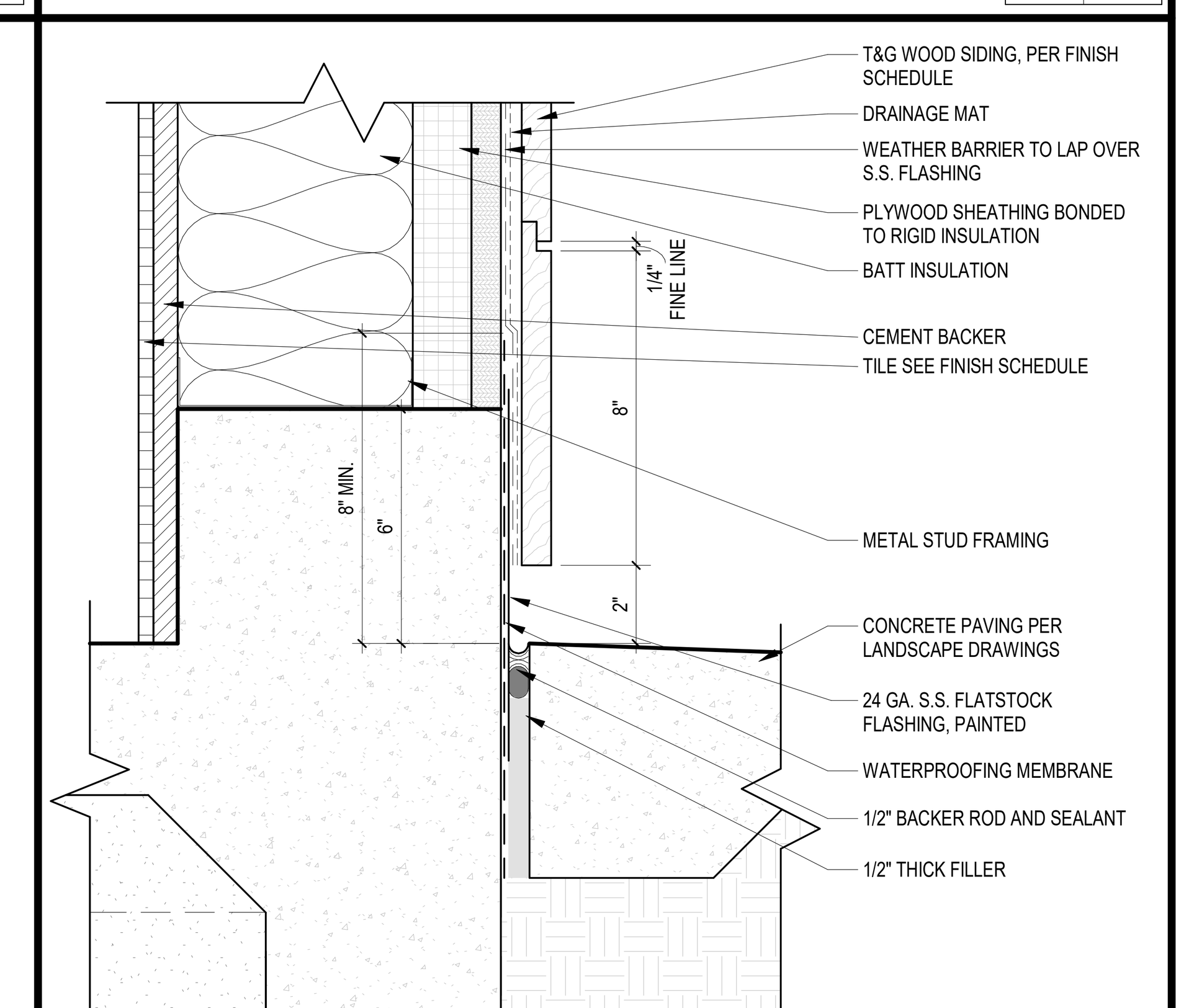

WALL @ GRADE (T&G) 3
3" = 1'-0" A3.3.1 A8.4.1

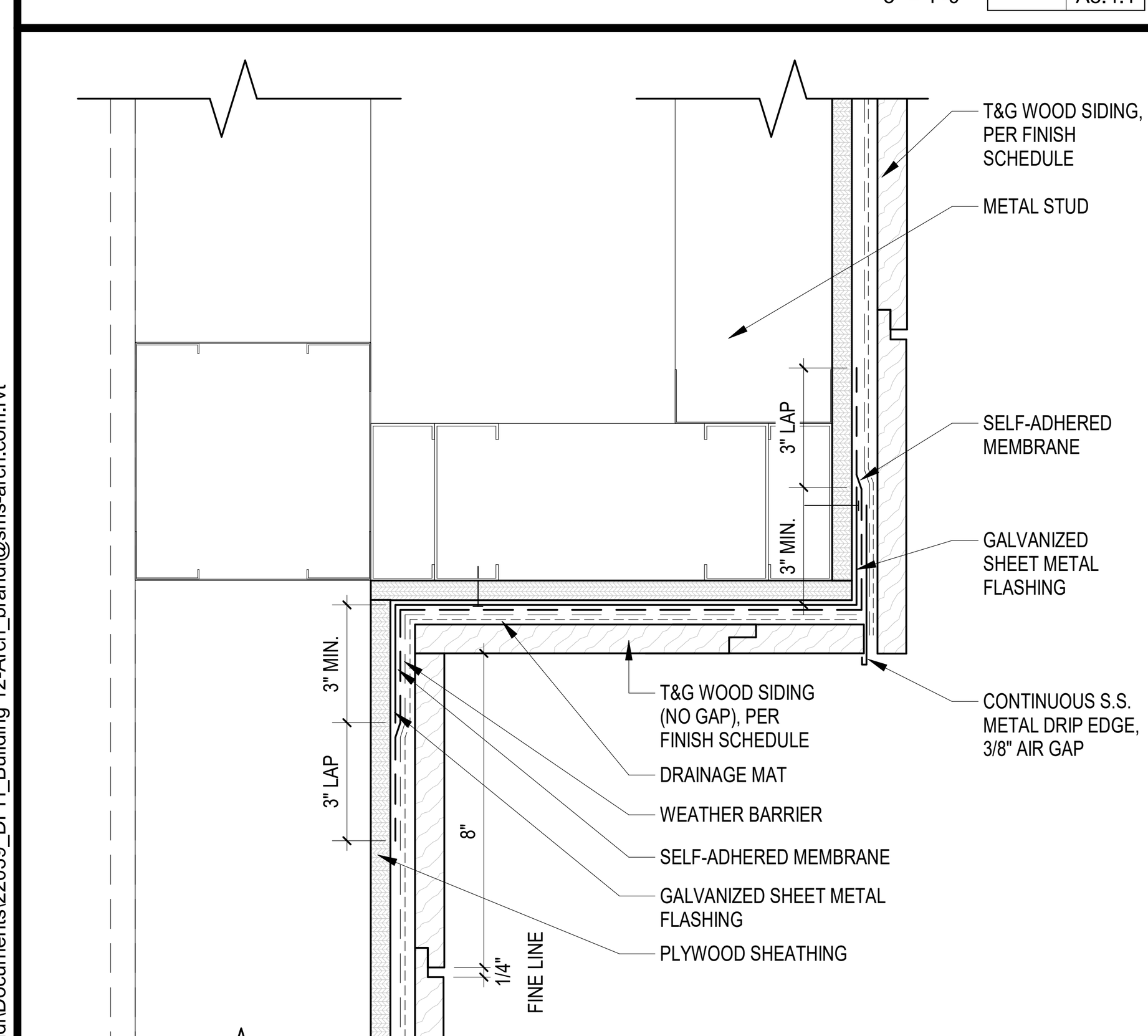

SOFFIT @ WALL (T&G) 20
3" = 1'-0" A3.3.1 A8.4.1

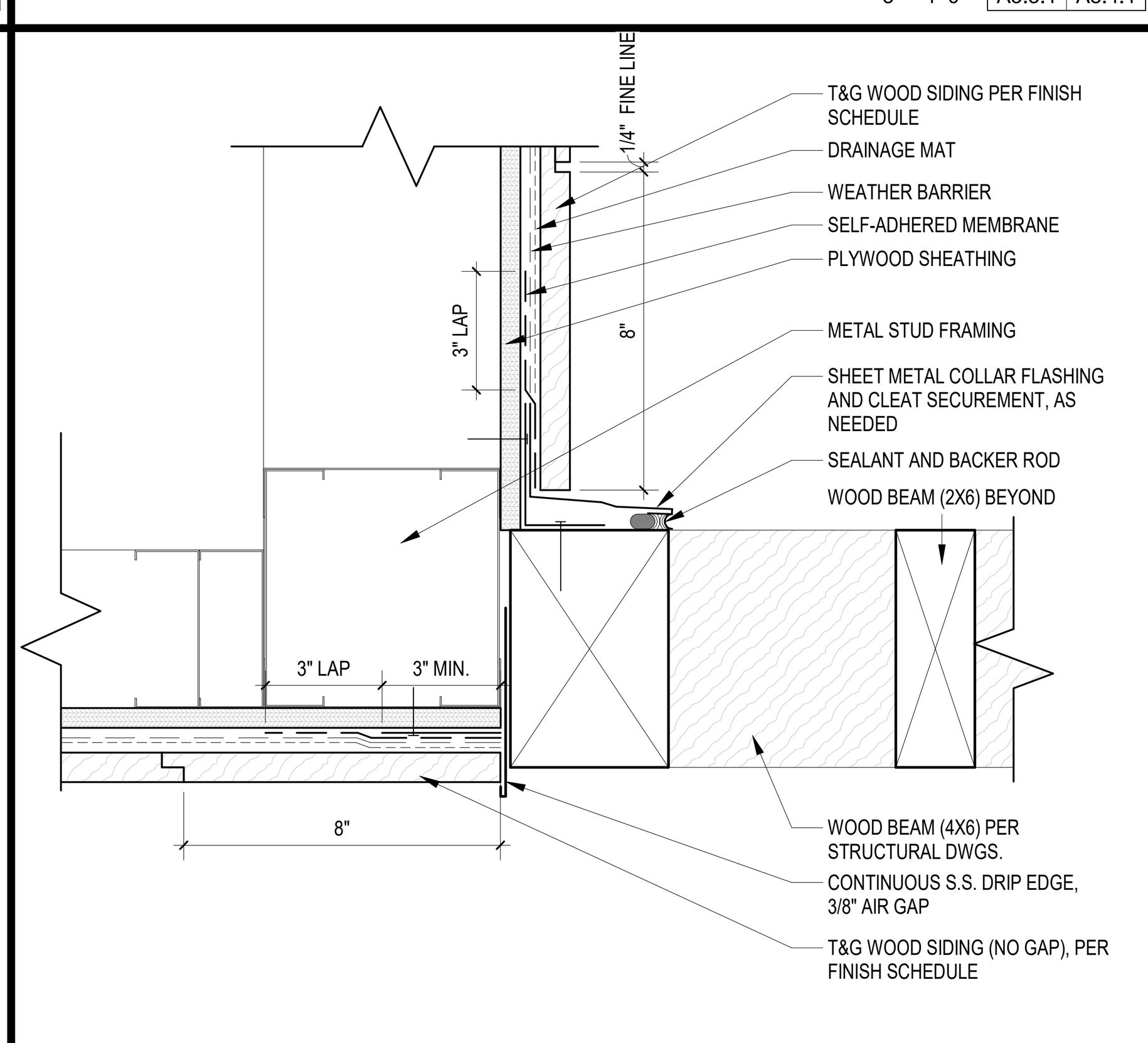

SOFFIT EDGE (T&G) @ WOOD LOUVERED CANOPY 16
3" = 1'-0" A3.3.1 A8.4.1

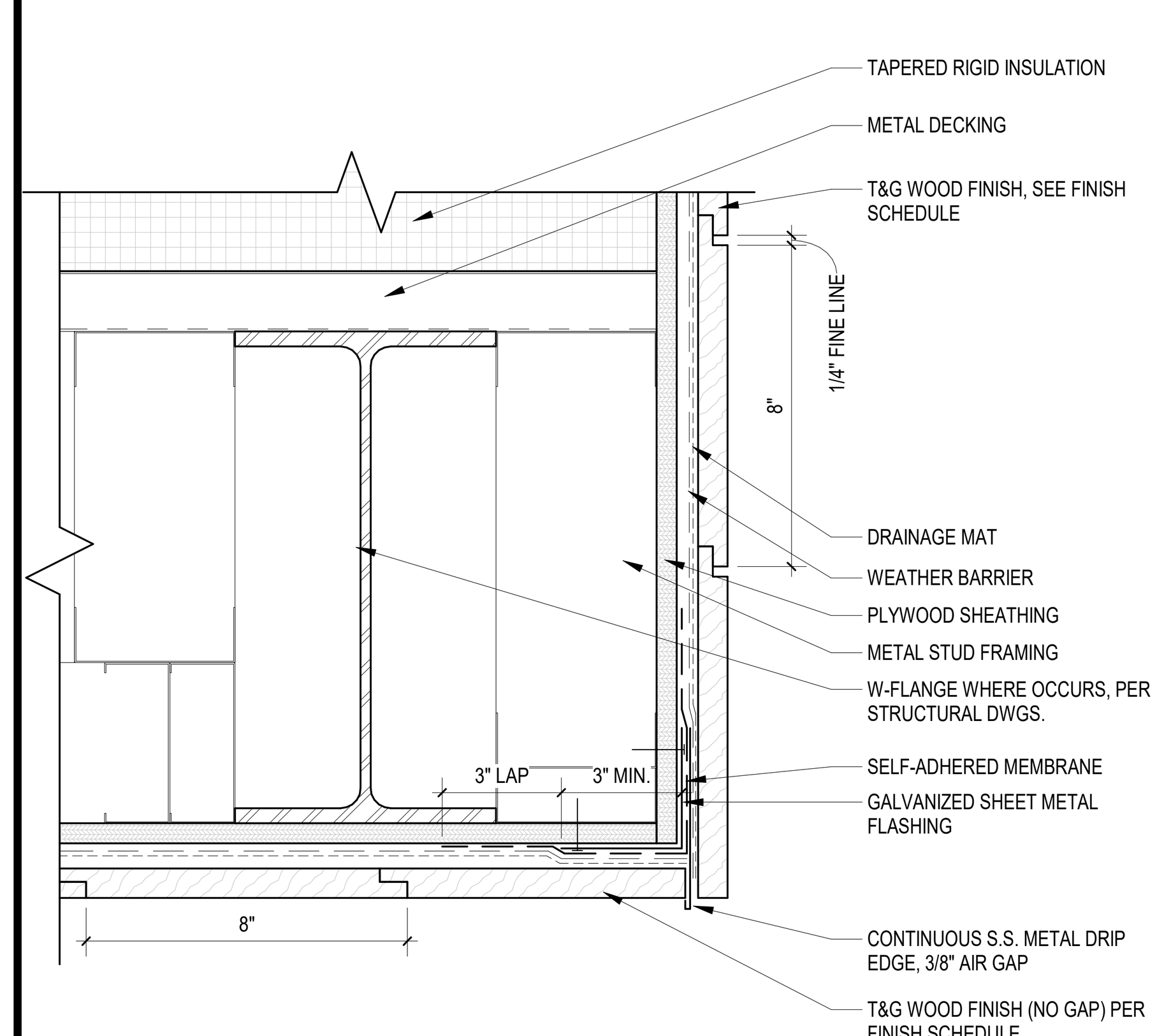

SOFFIT @ LIGHT WELL (T&G) 12
3" = 1'-0" A3.3.1 A8.4.1

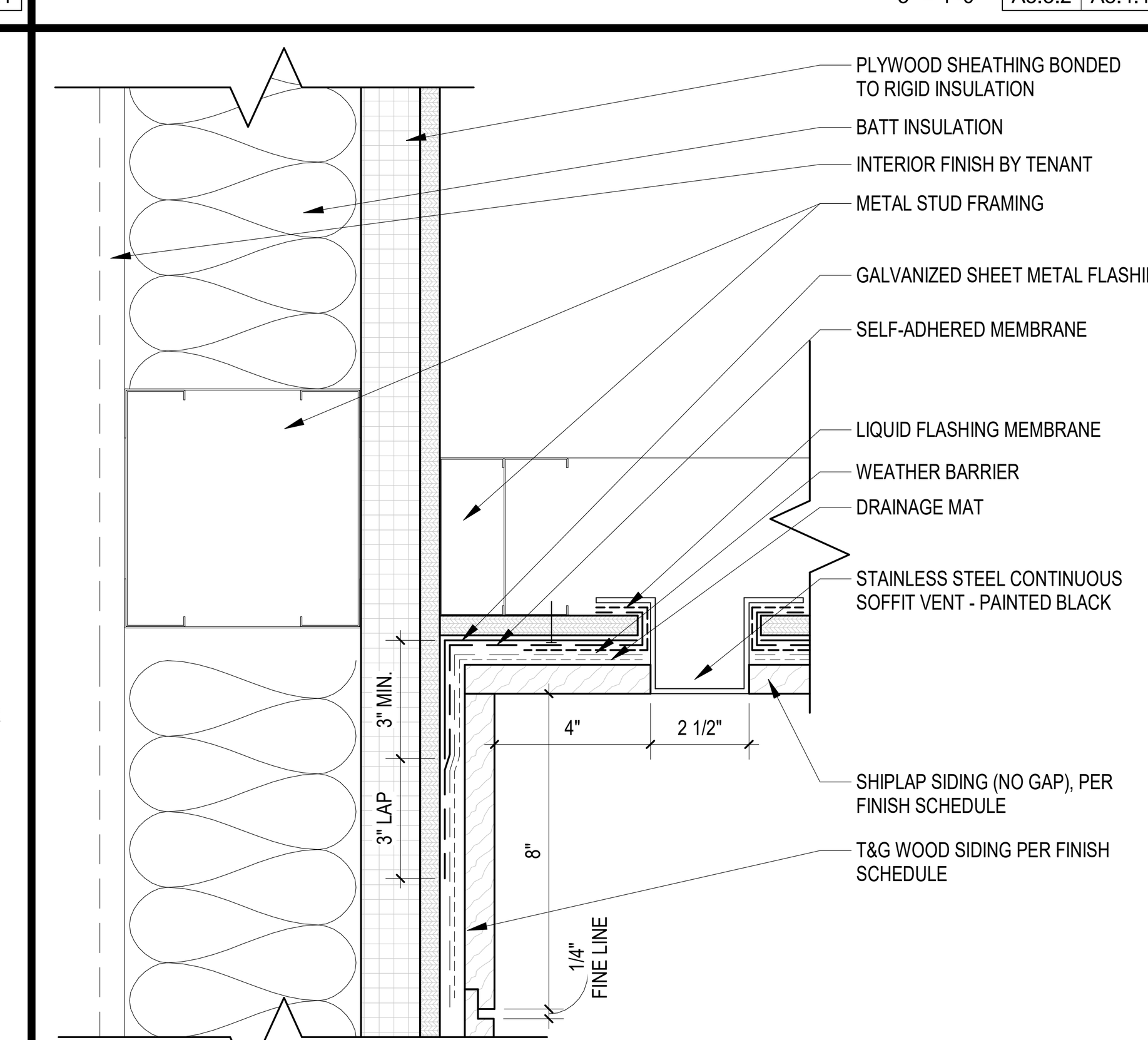

SOFFIT (Shiplap) @ WALL (T&G) 8
3" = 1'-0" A3.3.1 A8.4.1

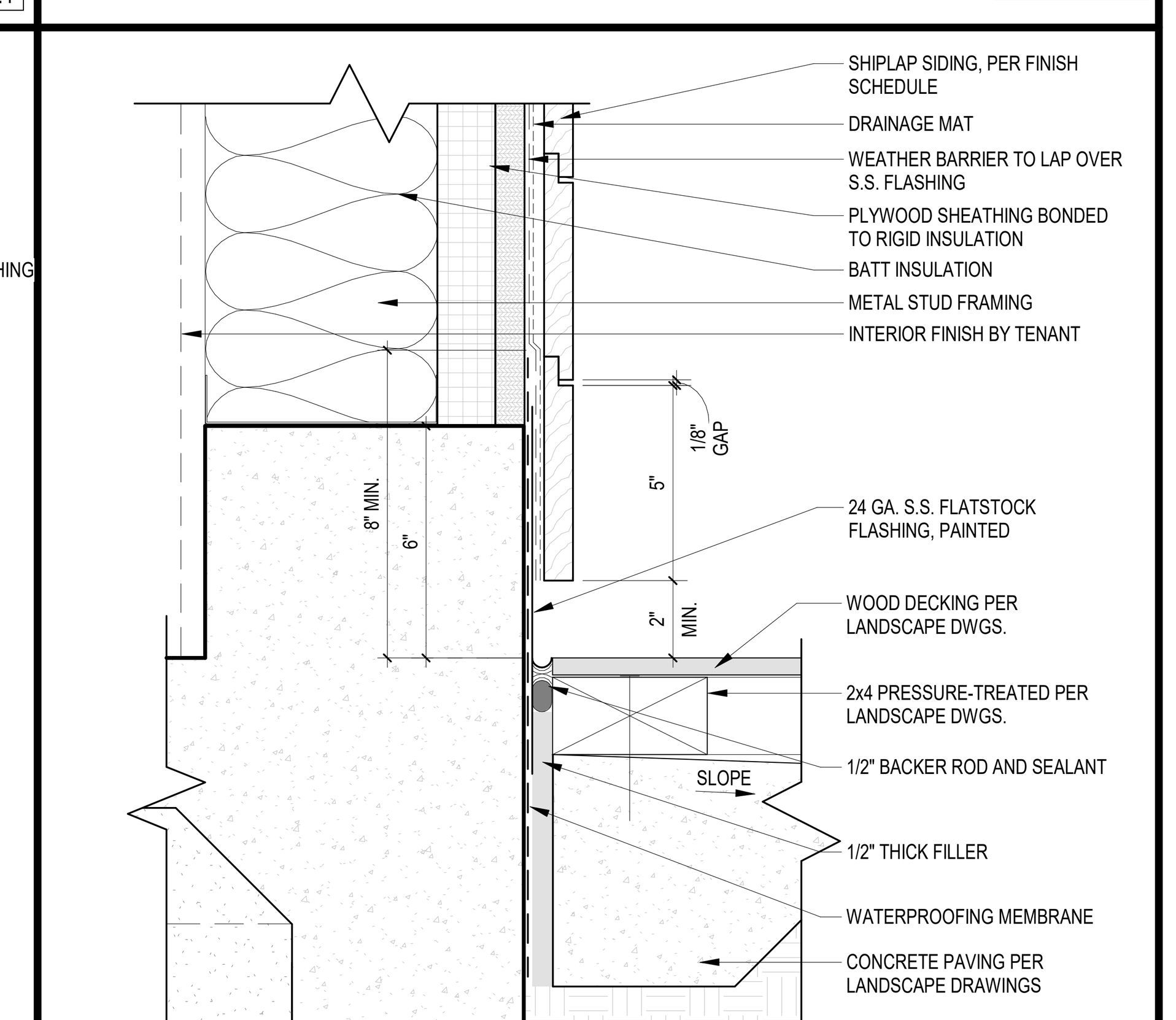

WALL @ GRADE (Shiplap) 4
3" = 1'-0" A3.3.2 A8.4.1

SMS ARCHITECTS
100 Progress | Suite 250
Irvine, California 92618
949.757.3240 | www.sms-arch.com

CONSTANT

DANA POINT HARBOR PARTNERS

PROJECT NAME:
DANA POINT HARBOR COMMERCIAL CORE
BUILDING 12
1290 HARBOR WAY
DANA POINT, CA 92629

CLIENT
BWP BURNHAM|WARD PROPERTIES

LICENSED ARCHITECT
BRANDON DEDMON
No. C-37432
11.30.23
Exp. Date
STATE OF CALIFORNIA

No.	DATE	ISSUE
	9/30/2022	50% SCHEMATIC DESIGN
	10/28/2022	100% SCHEMATIC DESIGN
	02/10/2023	100% DESIGN DEVELOPMENT
	03/17/2023	50% CONSTRUCTION DOCUMENTS
A	04/21/2023	COUNTY RESUBMITTAL
B	10/09/2024	CITY PLANNING RESUBMITTAL

DRAWINGS AND WRITTEN MATERIAL APPEARING HEREIN CONSTITUTE ORIGINAL AND UNPUBLISHED WORK OF SMS ARCHITECTS AND MAY NOT BE DUPLICATED, USED OR DISCLOSED WITHOUT WRITTEN CONSENT OF THE ARCHITECT

PROJECT NO. 22039
DATE JANUARY 25, 2023
DRAWING TITLE
WALL DETAILS

DRAWING NO.
A8.4.1

10/8/2024 5:12:31 PM

C:\Users\Brandi\Documents\22039_DPH_Building 12-Arch_brandi@sms-arch.com.rvt

CITY OF DANA POINT
PLANNING DIVISION

This plan has been reviewed for ZONING ONLY and meets the requirements of Title 9 of the Dana Point Municipal Code.

APPROVED KBN

DATE 10/21/24

COMMENTS BUILDING 12 (OC PERMIT PKG21-0516) PER CDP13-0018(I).

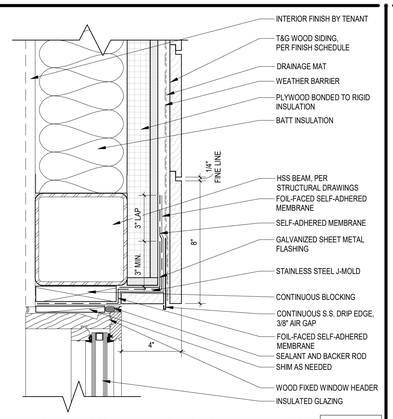

FIXED WINDOW HEADER @ WALL (T&G) 9
3" = 1'-0" A3.3.1 A8.4.2

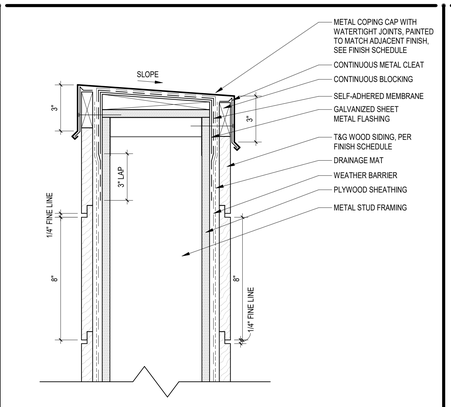

T&G END CAP AT WALL 5
3" = 1'-0" A3.3.1 A8.4.2

Zoning: CanningK 11/13/2024

Building&Safety: OCPWAzarvandB 12/22/2025

Permits: BNR21-0246, ELE21-0853, MEC21-0514, PLB21-0900

County of Orange - OC Public Works
OC Development Services
APPROVED

This set of plans and specifications must be kept on the job at all times. It is unlawful to make any changes or alterations to these plans without written permission from OC Public Works, OC Development Services of Orange County. The stamping of these plan specifications SHALL NOT be held to permit or be an approval of the violation of any provisions of any County Ordinance or State law.

Hind Tahtabaee
BUILDING OFFICIAL

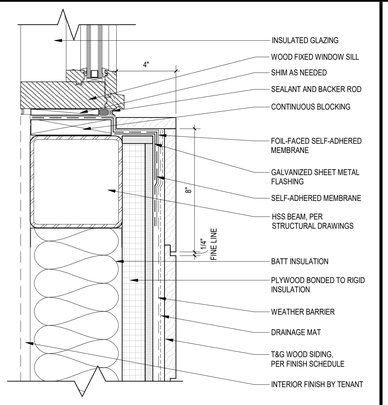

FIXED WINDOW SILL @ WALL (T&G) 10
3" = 1'-0" A3.3.1 A8.4.2

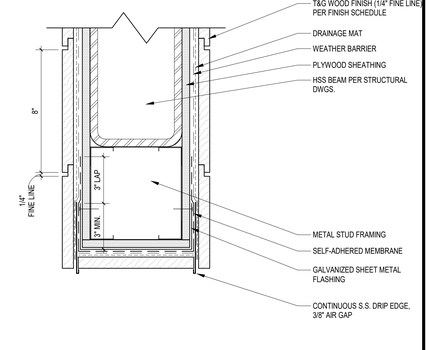

WOOD SCREEN AT END CAP HEADER (T&G) 6
3" = 1'-0" A4.1.2 A8.4.2

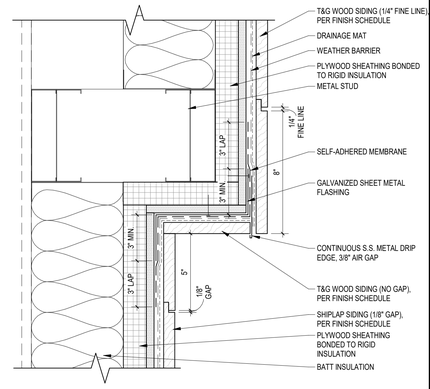

POP OUT (T&G) @ WALL (Shiplap) 2
3" = 1'-0" A3.3.1 A8.4.2

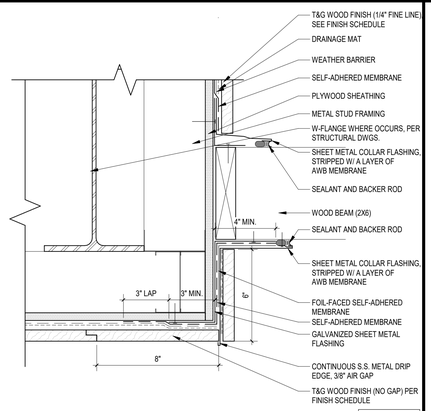

SOFFIT EDGE @ WOOD LOUVERED CANOPY 7
3" = 1'-0" A3.3.1 A8.4.2

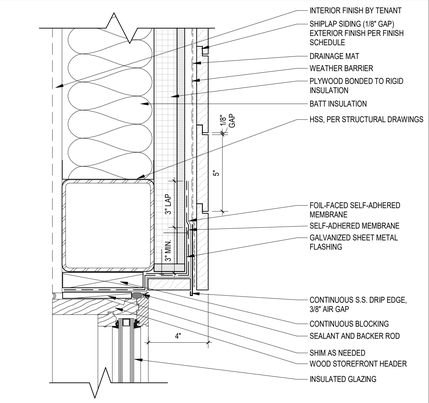

WOOD STOREFRONT @ WALL (SHIPLAP) 3
3" = 1'-0" A3.3.1 A8.4.2

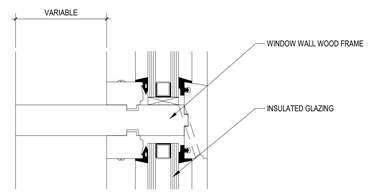

WINDOW WALL MULLION 8
6" = 1'-0" A3.3.2 A8.4.2

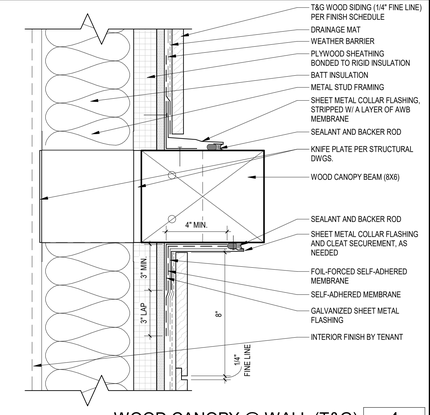

WOOD CANOPY @ WALL (T&G) 4
3" = 1'-0" A3.3.2 A8.4.2

SMS ARCHITECTS
100 Progress | Suite 250
Irvine, California 92618
949.757.3240 | www.sms-arch.com

CONSTANT

DANA POINT HARBOR PARTNERS

PROJECT NAME
DANA POINT HARBOR COMMERCIAL CORE
BUILDING 12
1290 HARBOR WAY
DANA POINT, CA 92629

CLIENT
BWP BURNHAM|WARD PROPERTIES

No.	DATE	ISSUE
	03/17/2023	50% CONSTRUCTION DOCUMENTS
A	04/21/2023	COUNTY RESUBMITTAL
B	10/09/2024	CITY PLANNING RESUBMITTAL

DRAWINGS AND WRITTEN MATERIAL APPEARING HEREIN CONSTITUTE ORIGINAL AND UNPUBLISHED WORK OF SMS ARCHITECTS AND MAY NOT BE DUPLICATED, USED OR DISCLOSED WITHOUT WRITTEN CONSENT OF THE ARCHITECT

PROJECT NO 22039

DATE JANUARY 25, 2023

DRAWING TITLE
WALL DETAILS

DRAWING NO.
A8.4.2

C:\Users\Brandt\Documents\22039_DPH_Building 12-Arch_brandt@sms-arch.com.rvt

10/8/2024 5:12:34 PM

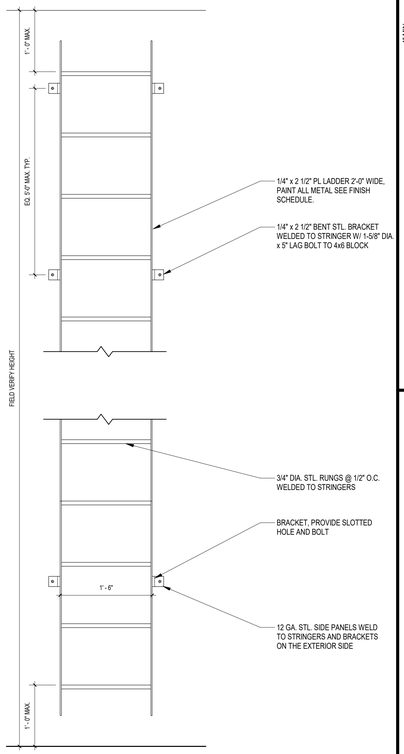

WALL MOUNTED ROOF LADDER 18
1" = 1'-0" | A8.5.1

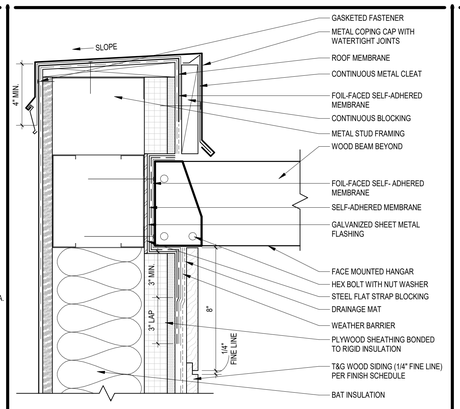

PARAPET CAP AT WOOD SLAT 13
3" = 1'-0" | A6.1.2 | A8.5.1

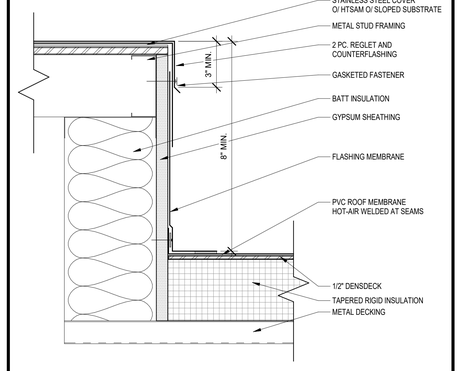

ROOF PLATFORM 9
3" = 1'-0" | A8.5.1

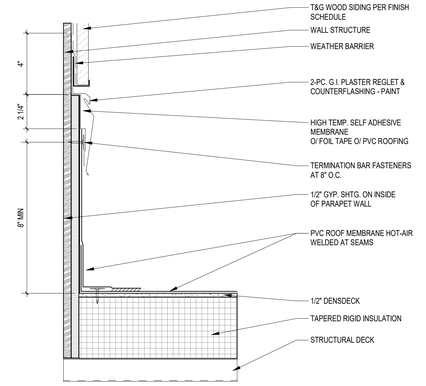

REGLET 5
3" = 1'-0" | A3.2.1 | A8.5.1

Zoning: CanningK 11/13/2024

Building&Safety: OCPWAzarvandB 12/22/2025

Permits: BNR21-0246, ELE21-0853, MEC21-0514, PLB21-0900

County of Orange - OC Public Works
OC Development Services
APPROVED
This set of plans and specifications must be kept on the job at all times. It is unlawful to make any changes or alterations to these plans without written permission from OC Public Works, OC Development Services of Orange County. The stamping of these plan specifications SHALL NOT be held to permit or be an approval of the violation of any provisions of any County Ordinance or State law.
Hani Tahetsbani
BUILDING OFFICIAL

CITY OF DANA POINT
PLANNING DIVISION

This plan has been reviewed for ZONING ONLY and meets the requirements of Title 9 of the Dana Point Municipal Code.

APPROVED_KBN

DATE 10/21/24

COMMENTS BUILDING 12 (OC PERMIT PKG21-0516) PER CDP13-0018(I).

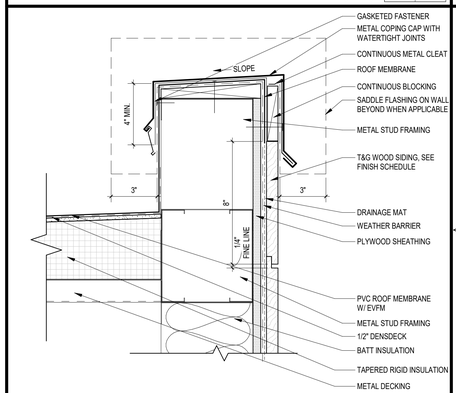

PARAPET CAP (T&G) 14
3" = 1'-0" | A3.3.1 | A8.5.1

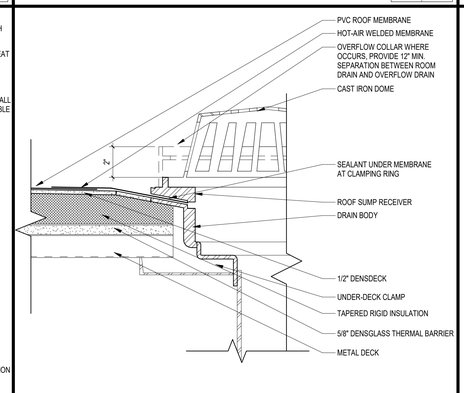

ROOF DRAIN 10
3" = 1'-0" | A8.5.1

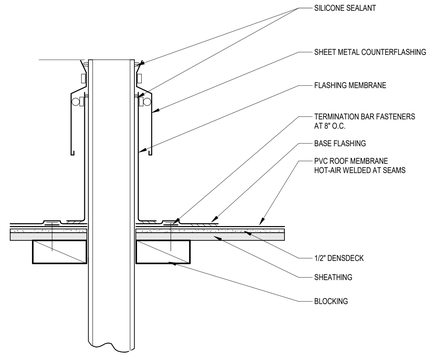

VENT STACK FLASHING 6
3" = 1'-0" | A8.5.1

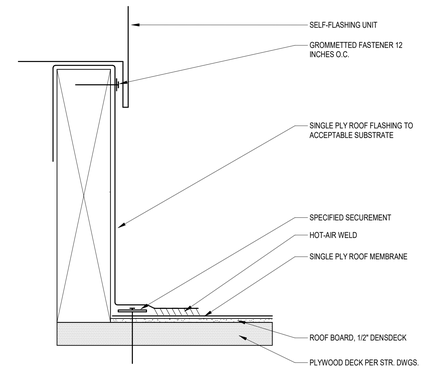

CURB FLASHING 2
6" = 1'-0" | A8.5.1

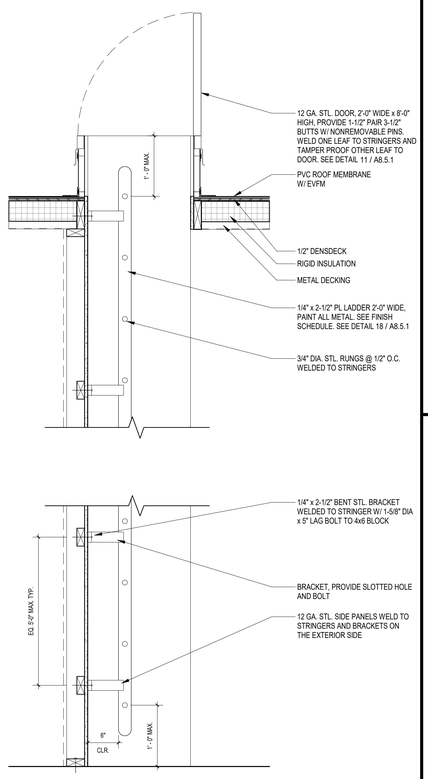

WALL MOUNTED ROOF LADDER SECTION 20
1" = 1'-0" | A8.5.1

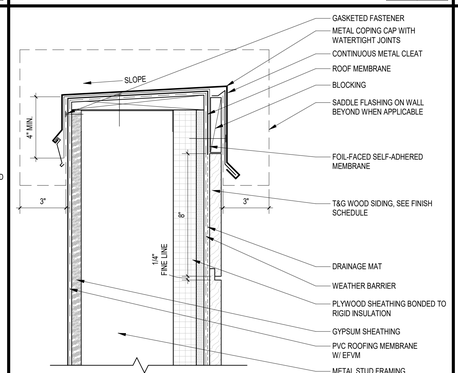

PARAPET CAP AT WOOD SIDING (T&G) 15
3" = 1'-0" | A2.0.3 | A8.5.1

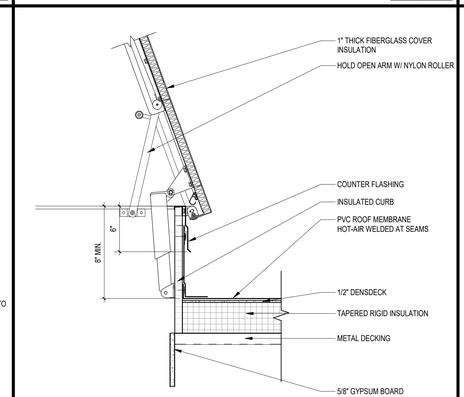

ROOF HATCH 11
1 1/2" = 1'-0" | A2.0.3 | A8.5.1

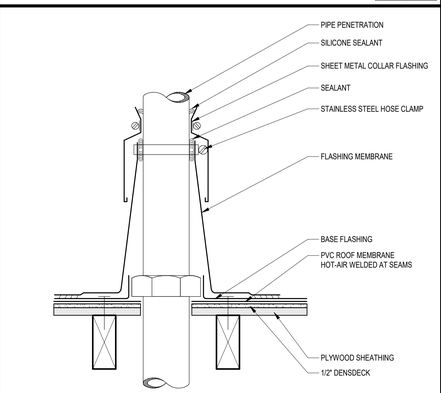

CONE FLASHING 7
3" = 1'-0" | A8.5.1

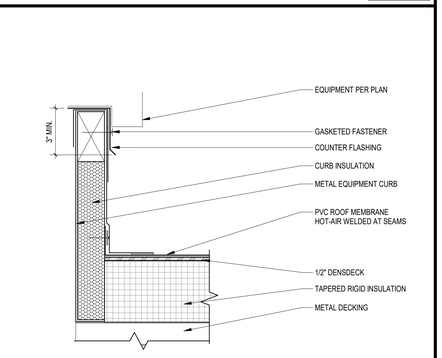

ROOF CURB (METAL DECK) 3
3" = 1'-0" | A8.5.1

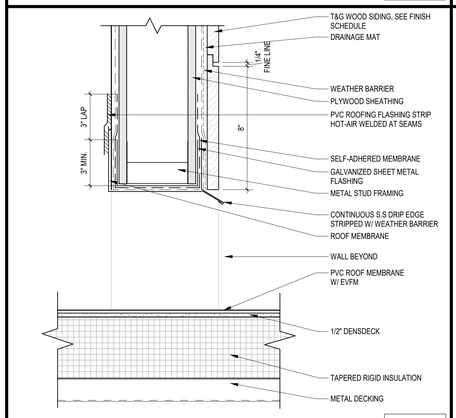

ROOF SCUPPER 16
3" = 1'-0" | A3.2.2 | A8.5.1

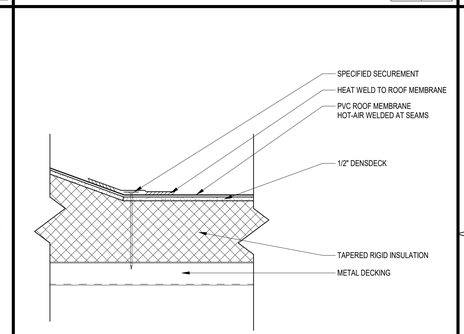

SLOPE TRANSITION 12
3" = 1'-0" | A2.0.3 | A8.5.1

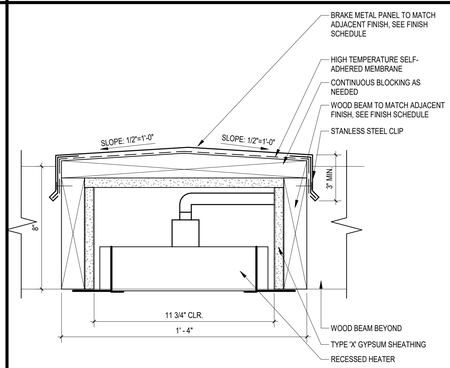

WOOD HEATHER HOUSING 8
3" = 1'-0" | A3.3.1 | A8.5.1

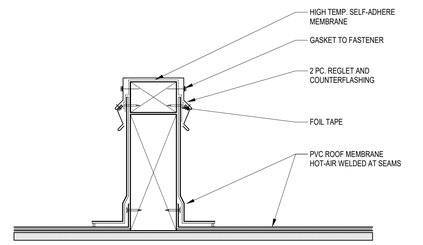

EQUIPMENT SUPPORT 4
3" = 1'-0" | A8.5.1

SMS ARCHITECTS
100 Progress | Suite 250
Irvine, California 92618
949.757.3240 | www.sms-arch.com

CONSTANT

DANA POINT HARBOR PARTNERS

PROJECT NAME
DANA POINT HARBOR COMMERCIAL CORE
BUILDING 12
1290 HARBOR WAY
DANA POINT, CA 92629

CLIENT
BWP PROPERTIES
BURNHAM | WARD

LICENSED ARCHITECT
BRANDON DEDMON
No. C-37432
11.30.23
Exp. Date
STATE OF CALIFORNIA

No.	DATE	ISSUE
	9/30/2022	50% SCHEMATIC DESIGN
	10/28/2022	100% SCHEMATIC DESIGN
	02/10/2023	100% DESIGN DEVELOPMENT
	03/17/2023	50% CONSTRUCTION DOCUMENTS
A	04/21/2023	COUNTY RESUBMITTAL
B	10/09/2024	CITY PLANNING RESUBMITTAL

DRAWINGS AND WRITTEN MATERIAL APPEARING HEREIN CONSTITUTE ORIGINAL AND UNPUBLISHED WORK OF SMS ARCHITECTS AND MAY NOT BE DUPLICATED, USED OR DISCLOSED WITHOUT WRITTEN CONSENT OF THE ARCHITECT

PROJECT NO 22039

DATE JANUARY 25, 2023

DRAWING TITLE
ROOF DETAILS

DRAWING NO.
A8.5.1

C:\Users\Brandt\Documents\22039_DPH_Building 12-Arch_brandt@sms-arch.com.rvt

10/8/2024 5:12:38 PM

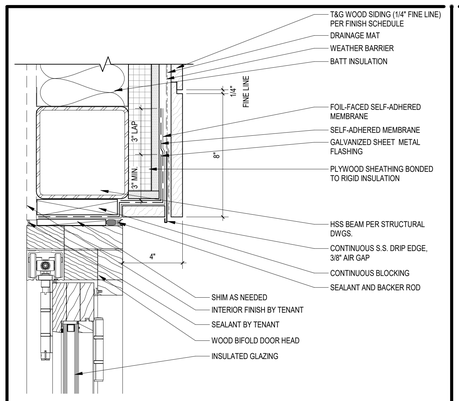

WD OUTSWING DOOR HEAD (T&G) 17
3" = 1'-0" A8.6.1

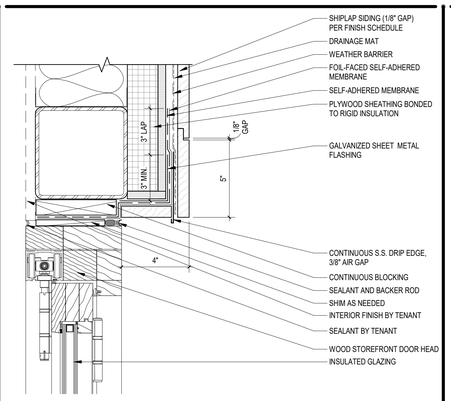

WD OUTSWING DOOR HEAD (Shiplap) 13
3" = 1'-0" A8.6.1

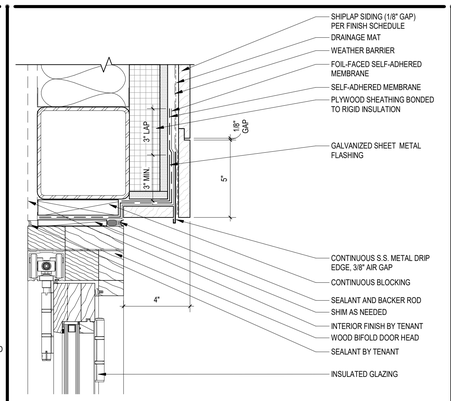

WD BI-FOLDING DOOR HEAD (Shiplap) 9
3" = 1'-0" A3.3.1 A8.6.1

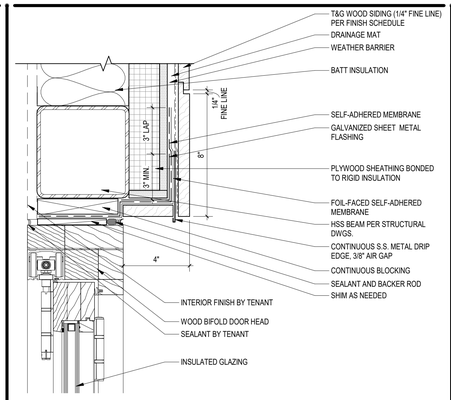

WD BI-FOLDING DOOR HEAD (T&G) 5
3" = 1'-0" A3.3.1 A8.6.1

Zoning: CanningK 11/13/2024
Building&Safety: OCPWAzarvandB 12/22/2025
Permits: BNR21-0246, ELE21-0853, MEC21-0514, PLB21-0900
County of Orange - OC Public Works
OC Development Services
APPROVED
This set of plans and specifications must be kept on the job at all times. It is unlawful to make any changes or alterations to these plans without written permission from OC Public Works, OC Development Services of Orange County. The stamping of these plan specifications SHALL NOT be held to permit or be an approval of the violation of any provisions of any County Ordinance or State law.
Hind Tshetshasen
BUILDING OFFICIAL

CITY OF DANA POINT
PLANNING DIVISION

This plan has been reviewed for ZONING ONLY and meets the requirements of Title 9 of the Dana Point Municipal Code.

APPROVED KBN

DATE 10/21/24

COMMENTS BUILDING 12 (OC PERMIT PKG21-0516) PER CDP13-0018(I).

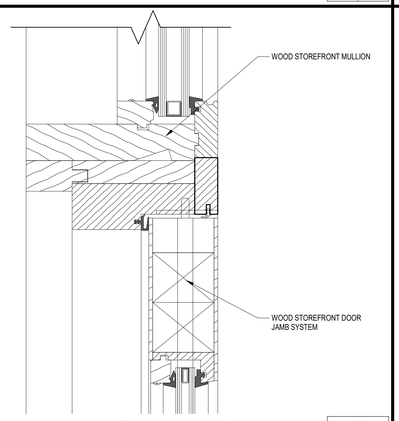

WD OUTSWING DOOR HEAD @ MULLION 18
6" = 1'-0" A8.6.1

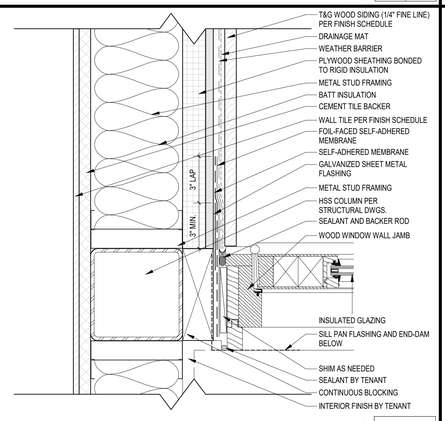

WD OUTSWING DOOR JAMB @ WALL (T&G) 14
3" = 1'-0" A7.1.1 A8.6.1

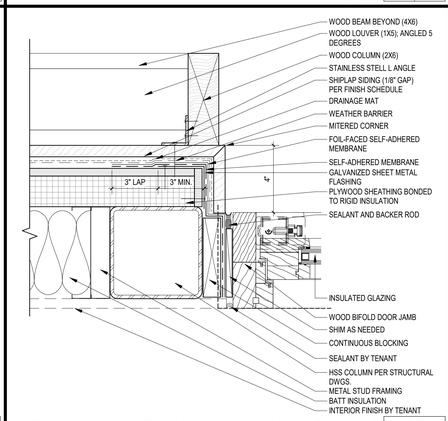

WD BI-FOLDING DOOR JAMB @ WALL (Shiplap) 10
3" = 1'-0" A4.2.1 A8.6.1

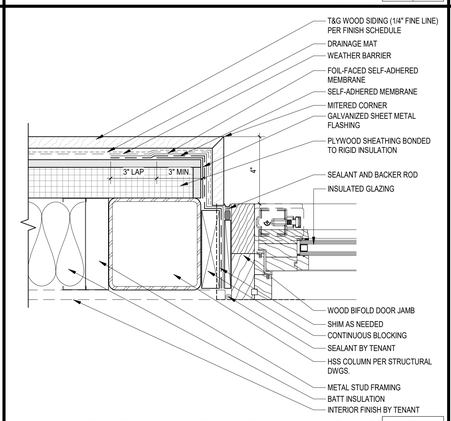

WD BI-FOLDING DOOR JAMB @ WALL (T&G) 6
3" = 1'-0" A2.0.2 A8.6.1

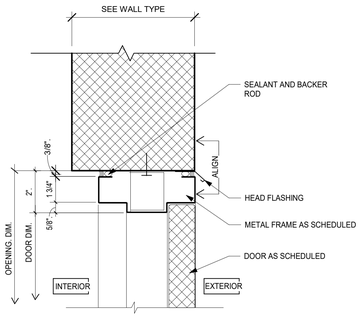

HM DOOR HEADER 2
3" = 1'-0" A3.3.1 A8.6.1

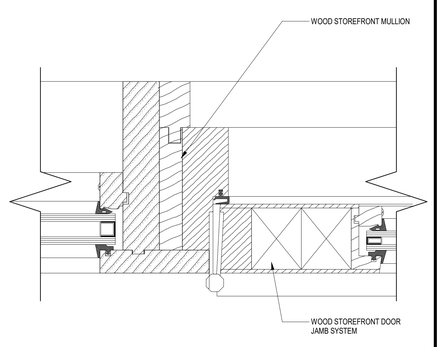

WD OUTSWING DOOR JAMB @ MULLION 15
6" = 1'-0" A8.6.1

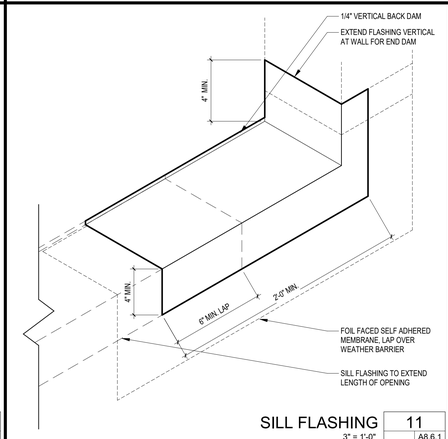

SILL FLASHING 11
3" = 1'-0" A8.6.1

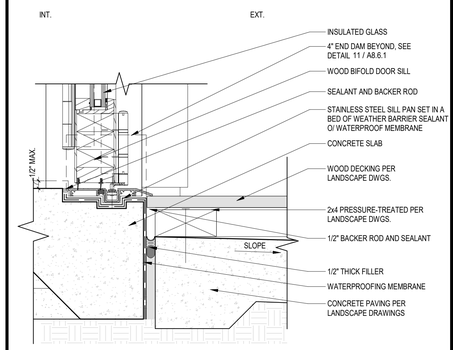

WD BI-FOLDING DOOR THRESHOLD @ GRADE 7
3" = 1'-0" A3.3.1 A8.6.1

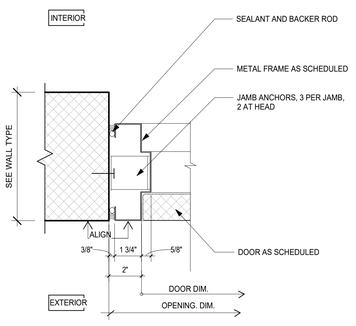

DOOR JAMB 3
3" = 1'-0" A8.6.1

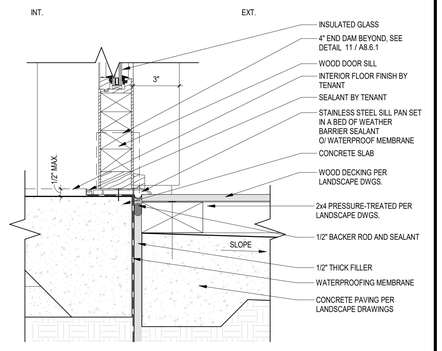

WD OUTSWING DOOR THRESHOLD @ GRADE 16
3" = 1'-0" A8.6.1

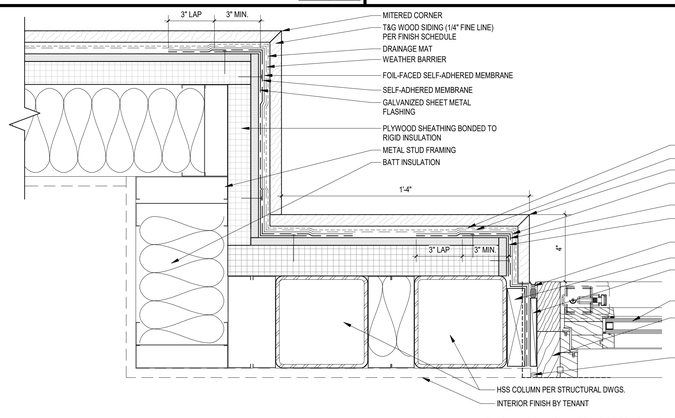

WD BI-FOLDING DOOR JAMB (T&G) 8
3" = 1'-0" A2.0.2 A8.6.1

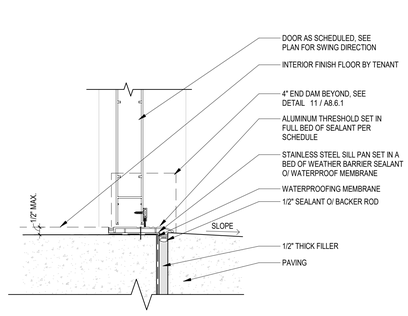

DOOR THRESHOLD 4
3" = 1'-0" A3.3.1 A8.6.1

SMS ARCHITECTS
100 Progress | Suite 250
Irvine, California 92618
949.757.3240 | www.sms-arch.com

CONSULT

DANA POINT HARBOR PARTNERS

PROJECT NAME
DANA POINT HARBOR COMMERCIAL CORE
BUILDING 12
1290 HARBOR WAY
DANA POINT, CA 92629

CLIENT
BURNHAM|WARD PROPERTIES
BWP

LICENSED ARCHITECT
BRANDON DEDMON
No. C-37432
11.30.23
Exp. Date
STATE OF CALIFORNIA

No.	DATE	ISSUE
	9/30/2022	50% SCHEMATIC DESIGN
	10/28/2022	100% SCHEMATIC DESIGN
	02/10/2023	100% DESIGN DEVELOPMENT
	03/17/2023	50% CONSTRUCTION DOCUMENTS
A	04/21/2023	COUNTY RESUBMITTAL
B	10/09/2024	CITY PLANNING RESUBMITTAL

DRAWINGS AND WRITTEN MATERIAL APPEARING HEREIN CONSTITUTE ORIGINAL AND UNPUBLISHED WORK OF SMS ARCHITECTS AND MAY NOT BE DUPLICATED, USED OR DISCLOSED WITHOUT WRITTEN CONSENT OF THE ARCHITECT

PROJECT NO. 22039
DATE JANUARY 25, 2023
DRAWING TITLE
EXTERIOR DOOR DETAILS

DRAWING NO.
A8.6.1

C:\Users\Brandf\Documents\22039_DPH_Building 12-Arch_brandf@sms-arch.com.rvt

10/8/2024 5:12:41 PM

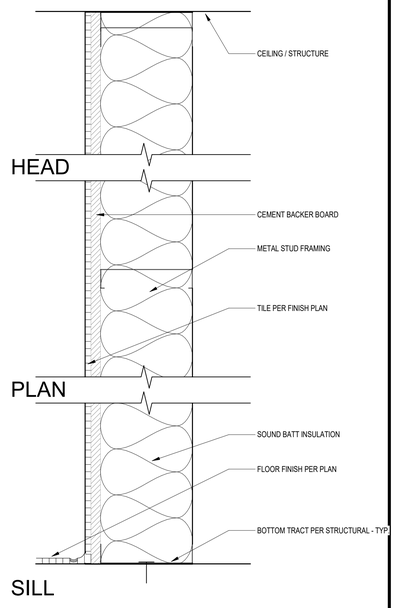

PARTITION TYPE SCHEDULE - P6

#	Stud Size	Stud GA	Stud Spacing	Fire Rating	UL Listing	Insulation	STC	Comments
P6	6"	20	16"			Yes		

PARTITION TYPE P6
3" = 1'-0"

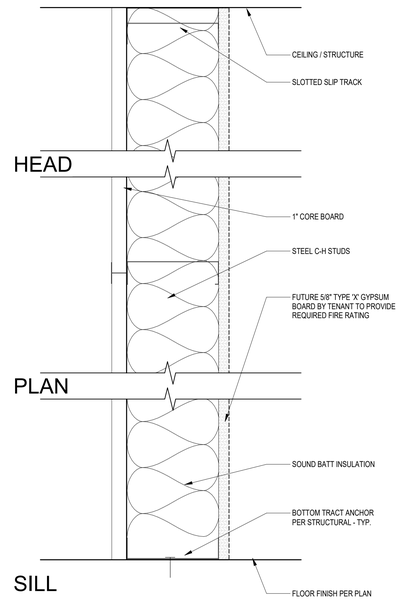

PARTITION TYPE SCHEDULE - P4

#	Stud Size	Stud GA	Stud Spacing	Fire Rating	UL Listing	Insulation	STC	Comments
P4	6"	20	16"	1 HR	U415	Yes	-	

PARTITION TYPE P4
3" = 1'-0"

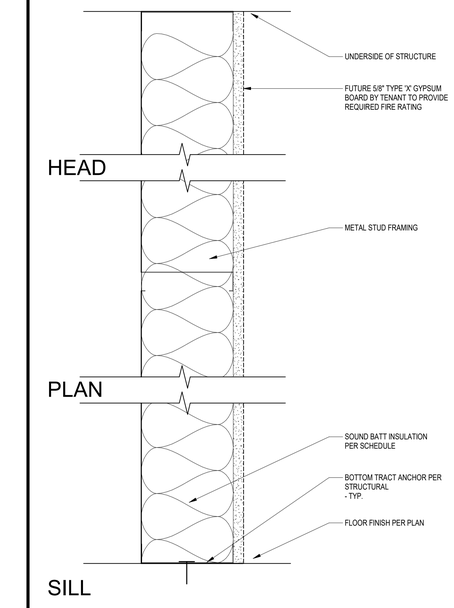

PARTITION TYPE SCHEDULE - P2

#	Stud Size	Stud GA	Stud Spacing	Fire Rating	UL Listing	Insulation	STC	Comments
P2	6"	20	16"	-	-	Yes	-	

PARTITION TYPE P2
3" = 1'-0"

Zoning: CanningK 11/13/2024

Building&Safety: OCPWAzarvandB 12/22/2025

Permits: BNR21-0246, ELE21-0853, MEC21-0514, PLB21-0900

County of Orange - OC Public Works
OC Development Services
APPROVED

This set of plans and specifications must be kept on the job at all times. It is unlawful to make any changes or alterations to these plans without written permission from OC Public Works/ OC Development Services of Orange County. The stamping of these plan specifications SHALL NOT be held to permit or be an approval of the violation of any provisions of any County Ordinance or State law.

Hind Tahtabaee
BUILDING OFFICIAL

CITY OF DANA POINT
PLANNING DIVISION

This plan has been reviewed for ZONING ONLY and meets the requirements of Title 9 of the Dana Point Municipal Code.

APPROVED KBN

DATE 10/21/24

COMMENTS BUILDING 12 (OC PERMIT PKG21-0516) PER CDP13-0018(I).

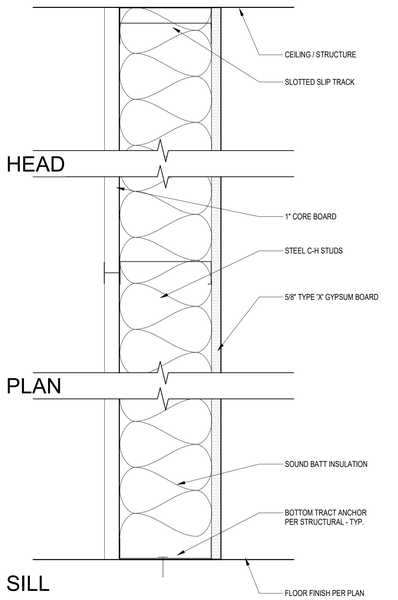

PARTITION TYPE SCHEDULE - P7

#	Stud Size	Stud GA	Stud Spacing	Fire Rating	UL Listing	Insulation	STC	Comments
P7	6"	20	16"	1 HR	U415	Yes	-	

PARTITION TYPE P7
3" = 1'-0"

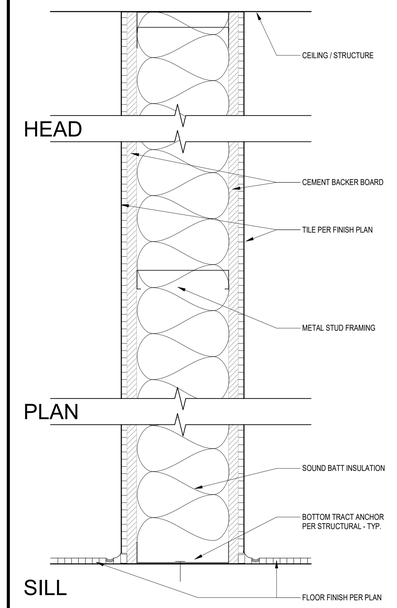

PARTITION TYPE SCHEDULE - P5

#	Stud Size	Stud GA	Stud Spacing	Fire Rating	UL Listing	Insulation	STC	Comments
P5	6"	20	16"	-		Yes		

PARTITION TYPE P5
3" = 1'-0"

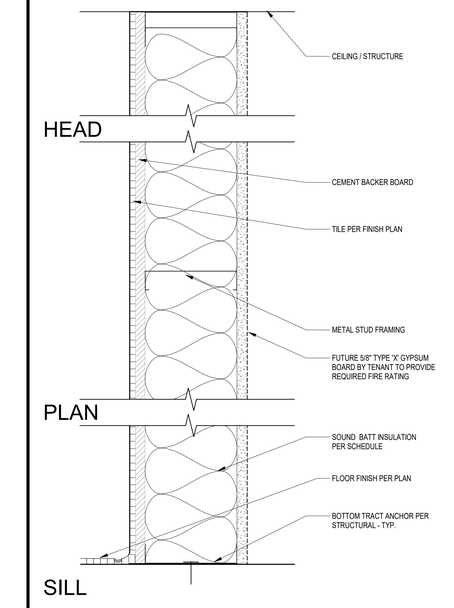

PARTITION TYPE SCHEDULE - P3

#	Stud Size	Stud GA	Stud Spacing	Fire Rating	UL Listing	Insulation	STC	Comments
P3	6"	20	16"	-		Yes		

PARTITION TYPE P3
3" = 1'-0"

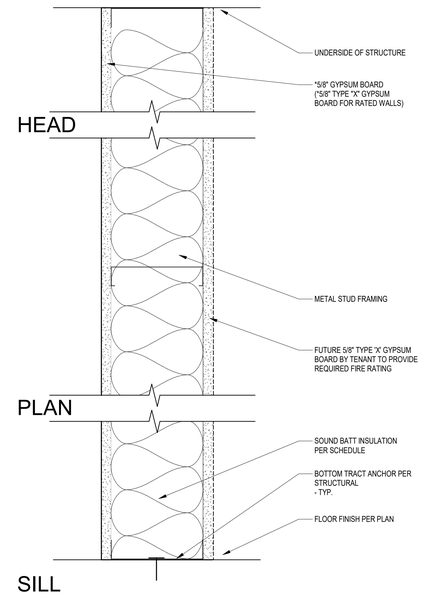

PARTITION TYPE SCHEDULE - P1

#	Stud Size	Stud GA	Stud Spacing	Fire Rating	UL Listing	Insulation	STC	Comments
P1	6"	20	16"	-	-	Yes	-	
P1a	6"	20	16"	1 HR	U419	Yes	-	

PARTITION TYPE P1
3" = 1'-0"

SMS ARCHITECTS
100 Progress | Suite 250
Irvine, California 92618
949.757.3240 | www.sms-arch.com

CONSTANT

DANA POINT HARBOR PARTNERS

PROJECT NAME
DANA POINT HARBOR COMMERCIAL CORE
BUILDING 12
1290 HARBOR WAY
DANA POINT, CA 92629

CLIENT
BURNHAM | WARD PROPERTIES
BWP

LICENSED ARCHITECT
BRANDON DEDMON
No. C-37432
11.30.23
Exp. Date
STATE OF CALIFORNIA

No.	DATE	ISSUE
	9/30/2022	50% SCHEMATIC DESIGN
	10/28/2022	100% SCHEMATIC DESIGN
A	04/21/2023	COUNTY RESUBMITTAL
B	10/09/2024	CITY PLANNING RESUBMITTAL

DRAWINGS AND WRITTEN MATERIAL APPEARING HEREIN CONSTITUTE ORIGINAL AND UNPUBLISHED WORK OF SMS ARCHITECTS AND MAY NOT BE DUPLICATED, USED OR DISCLOSED WITHOUT WRITTEN CONSENT OF THE ARCHITECT

PROJECT NO. 22039

DATE JANUARY 25, 2023

DRAWING TITLE
PARTITION TYPES

DRAWING NO.
A9.1.1

C:\Users\Brandf\Documents\22039_DPH_Building 12-Arch_brandf@sms-arch.com.rvt

10/8/2024 5:12:47 PM

CITY OF DANA POINT
PLANNING DIVISION

This plan has been reviewed for ZONING ONLY and meets the requirements of Title 9 of the Dana Point Municipal Code.

APPROVED KBN

DATE 10/21/24

COMMENTS BUILDING 12 (OC PERMIT PKG21-0516) PER CDP13-0018(1).

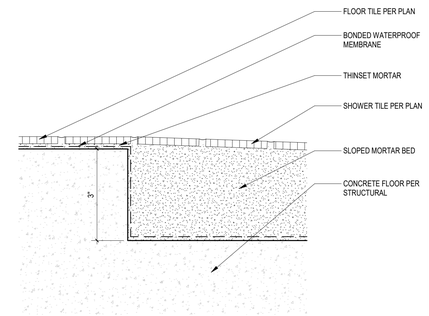

ROLL-IN SHOWER TRASITION 5
6" = 1'-0" A4.1.2 A9.2.1

Zoning: CanningK 11/13/2024

Building&Safety: OCPWAzarvandB 12/22/2025

Permits: BNR21-0246, ELE21-0853, MEC21-0514, PLB21-0900

County of Orange - OC Public Works
OC Development Services
APPROVED

This set of plans and specifications must be kept on the job at all times. It is unlawful to make any changes or alterations to these plans without written permission from OC Public Works, OC Development Services of Orange County. The stamping of these plan specifications SHALL NOT be held to permit or be an approval of the violation of any provisions of any County Ordinance or State law.

Hadi Tabatabaee
BUILDING OFFICIAL

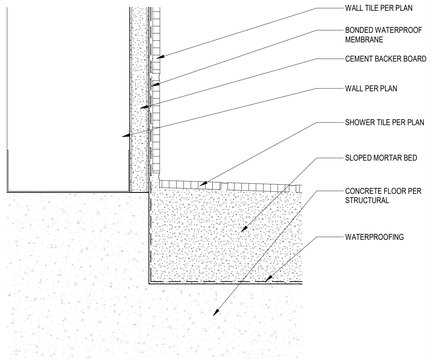

ROLL-IN SHOWER @ WALL 6
6" = 1'-0" A4.1.2 A9.2.1

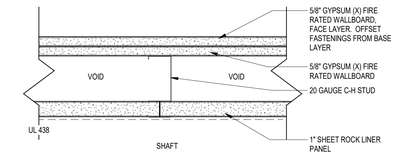

NOTE: BOTH FIRE DAMPERS AND SMOKE DAMPERS REQUIRED TO BE INSTALLED AT ALL SHAFT PENETRATIONS FOR A MINIMUM 2 HOUR FIRE RESITITIVITY. SHAFT ENCLOSURE TO COMPLY WITH 717.5 CBC

(2) HR SHAFT WALL ENCLOSURE 2
3" = 1'-0" A9.2.1

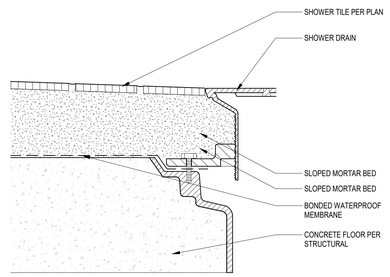

ROLL-IN SHOWER DRAIN 7
6" = 1'-0" A4.1.2 A9.2.1

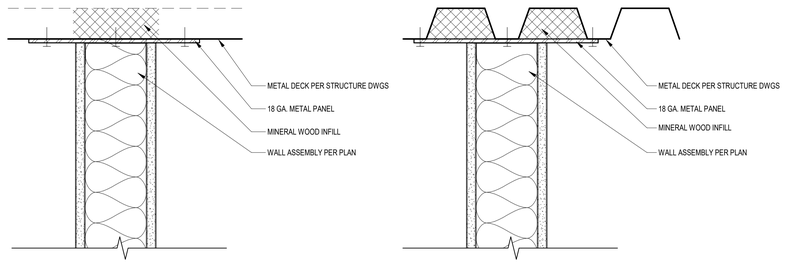

FIRE-RATED PARTITION @ METAL DECK 4
3" = 1'-0" A9.2.1

SMS ARCHITECTS
100 Progress | Suite 250
Irvine, California 92618
949.757.3240 | www.sms-arch.com

CONSTANT

DANA POINT HARBOR PARTNERS

PROJECT NAME
DANA POINT HARBOR COMMERCIAL CORE
BUILDING 12
1290 HARBOR WAY
DANA POINT, CA 92629

CLIENT
BURNHAM | WARD PROPERTIES

LICENSED ARCHITECT
BRANDON DEDMON
No. C-37432
11.30.23
Exp. Date
STATE OF CALIFORNIA

No.	DATE	ISSUE
	9/30/2022	50% SCHEMATIC DESIGN
	10/28/2022	100% SCHEMATIC DESIGN
B	10/09/2024	CITY PLANNING RESUBMITTAL

DRAWINGS AND WRITTEN MATERIAL APPEARING HEREIN CONSTITUTE ORIGINAL AND UNPUBLISHED WORK OF SMS ARCHITECTS AND MAY NOT BE DUPLICATED, USED OR DISCLOSED WITHOUT WRITTEN CONSENT OF THE ARCHITECT

PROJECT NO. 22039

DATE JANUARY 25, 2023

DRAWING TITLE
WALL DETAILS AND FLOOR DETAILS

DRAWING NO.
A9.2.1

10/8/2024 5:12:49 PM

C:\Users\Brandi\Documents\22039_DPH_Building 12-Arch_brandi@sms-arch.com.rvt

CITY OF DANA POINT
PLANNING DIVISION

This plan has been reviewed for ZONING ONLY and meets the requirements of Title 9 of the Dana Point Municipal Code.

APPROVED KBN

DATE 10/21/24

COMMENTS BUILDING 12 (OC PERMIT PKG21-0516) PER CDP13-0018(I).

Zoning: CanningK 11/13/2024

Building&Safety: OCPWAzarvandB 12/22/2025

Permits: BNR21-0246, ELE21-0853, MEC21-0514, PLB21-0900

County of Orange - OC Public Works
OC Development Services
APPROVED

This set of plans and specifications must be kept on the job at all times. It is unlawful to make any changes or alterations to these plans without written permission from OC Public Works, OC Development Services of Orange County. The stamping of these plan specifications SHALL NOT be held to permit or be an approval of the violation of any provisions of any County Ordinance or State law.

Hadi Tabatabaee
BUILDING OFFICIAL

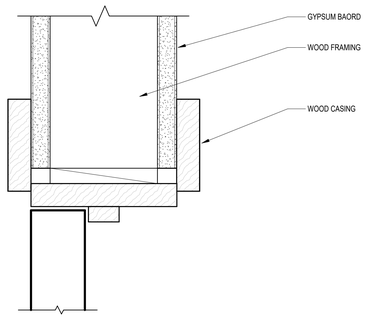

WOOD DOOR HEAD 6
6" = 1'-0" A9.5.1

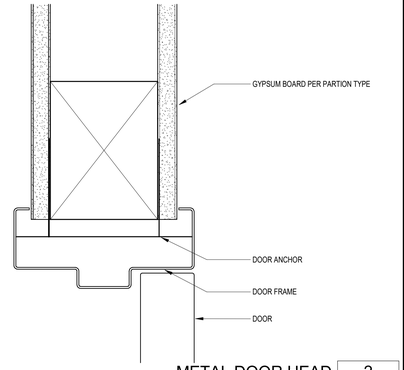

METAL DOOR HEAD 2
6" = 1'-0" A9.5.1

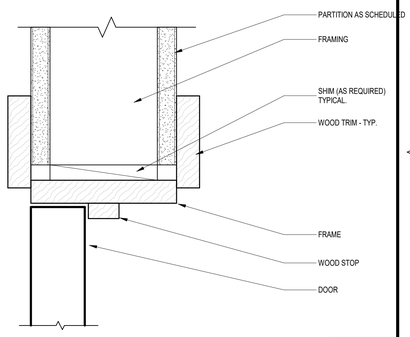

WOOD DOOR JAMB 7
6" = 1'-0" A9.5.1

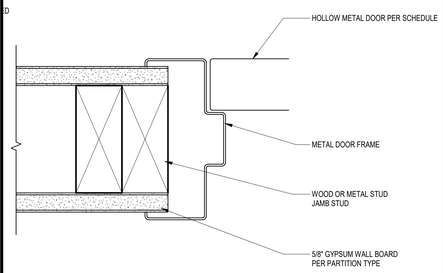

HOLLOW METAL DOOR AT GYP CONDITION 3
6" = 1'-0" A9.5.1

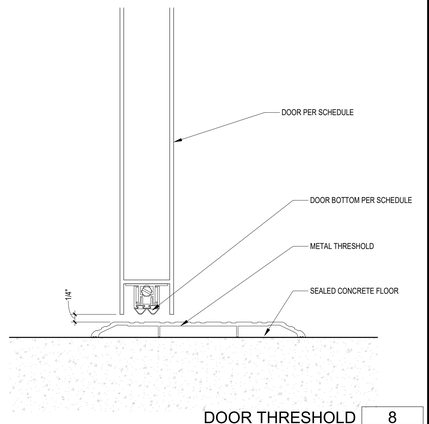

DOOR THRESHOLD 8
6" = 1'-0" A9.5.1

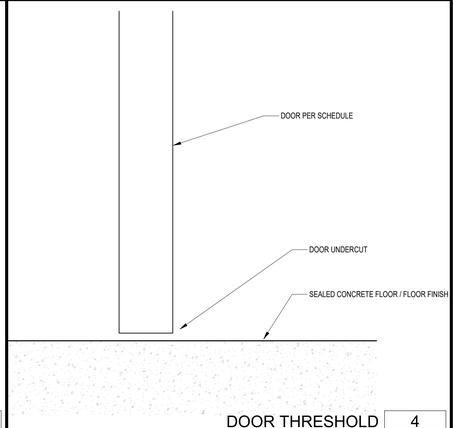

DOOR THRESHOLD 4
6" = 1'-0" A9.5.1

SMS ARCHITECTS
100 Progress | Suite 250
Irvine, California 92618
949.757.3240 | www.sms-arch.com

CONSTANT

DANA POINT HARBOR PARTNERS

PROJECT NAME
DANA POINT HARBOR COMMERCIAL CORE
BUILDING 12
1290 HARBOR WAY
DANA POINT, CA 92629

CLIENT
BWP BURNHAM | WARD PROPERTIES

No.	DATE	ISSUE
	10/28/2022	100% SCHEMATIC DESIGN
B	10/09/2024	CITY PLANNING RESUBMITTAL

DRAWINGS AND WRITTEN MATERIAL APPEARING HEREIN CONSTITUTE ORIGINAL AND UNPUBLISHED WORK OF SMS ARCHITECTS AND MAY NOT BE DUPLICATED, USED OR DISCLOSED WITHOUT WRITTEN CONSENT OF THE ARCHITECT

PROJECT NO. 22039

DATE JANUARY 25, 2023

DRAWING TITLE
DOOR DETAILS

DRAWING NO.
A9.5.1

10/8/2024 5:12:50 PM

C:\Users\Brandi\Documents\22039_DPH_Building 12-Arch_brandi@sms-arch.com.rvt

CITY OF DANA POINT
PLANNING DIVISION

This plan has been reviewed for ZONING ONLY and meets the requirements of Title 9 of the Dana Point Municipal Code.

APPROVED KBN

DATE 10/21/24

COMMENTS BUILDING 12 (OC PERMIT PKG21-0516) PER CDP13-0018(I).

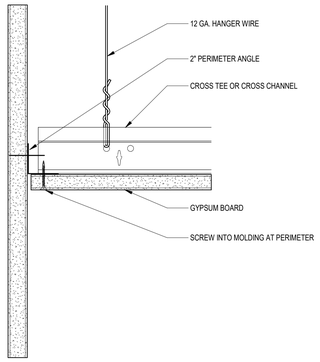

SUSPENDED GYP BD AT WALL 9 / A9.6.1
6" = 1'-0"

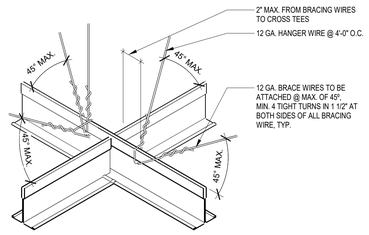

SUSPENSION WIRES 5 / A9.6.1
12" = 1'-0"

Zoning: CanningK 11/13/2024

Building&Safety: OCPWAzarvandB 12/22/2025

Permits: BNR21-0246, ELE21-0853, MEC21-0514, PLB21-0900

County of Orange - OC Public Works
OC Development Services
APPROVED

This set of plans and specifications must be kept on the job at all times. It is unlawful to make any changes or alterations to these plans without written permission from OC Public Works, OC Development Services of Orange County. The stamping of these plan specifications SHALL NOT be held to permit or be an approval of the violation of any provisions of any County Ordinance or State law.

Hind Tahtabawi
BUILDING OFFICIAL

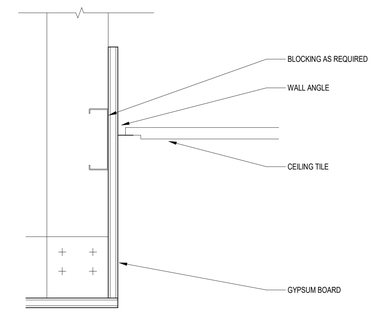

SOFFIT SUSPENDED CEILING TILE 6 / A9.6.1
3" = 1'-0"

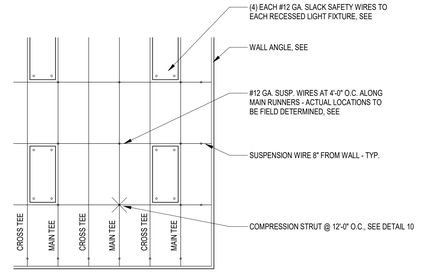

CEILING PLAN 2 / A9.6.1
1/4" = 1'-0"

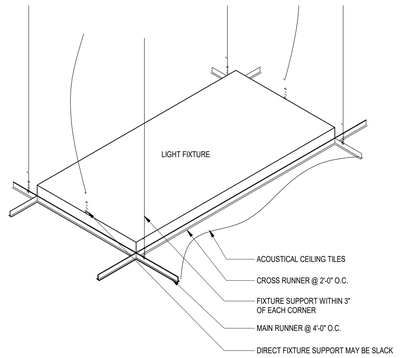

SUSPENDED LIGHT 7 / A9.6.1
12" = 1'-0"

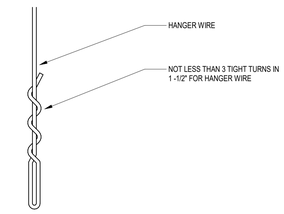

WIRE HANGER 3 / A9.6.1
12" = 1'-0"

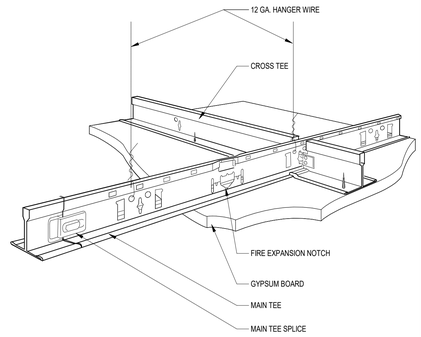

SUSPENDED GYPSUM BOARD 8 / A9.6.1
6" = 1'-0"

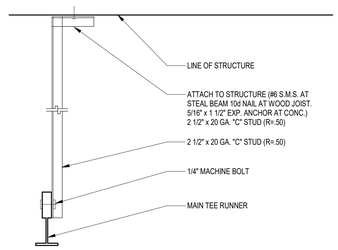

COMPRESSION STRUT 4 / A9.6.1
12" = 1'-0"

SMS ARCHITECTS
100 Progress | Suite 250
Irvine, California 92618
949.757.3240 | www.sms-arch.com

CONSTANT

DANA POINT HARBOR PARTNERS

PROJECT NAME
DANA POINT HARBOR COMMERCIAL CORE
BUILDING 12
1290 HARBOR WAY
DANA POINT, CA 92629

CLIENT
BURNHAM | WARD PROPERTIES
BWP

No.	DATE	ISSUE
	9/30/2022	50% SCHEMATIC DESIGN
	10/28/2022	100% SCHEMATIC DESIGN

DRAWINGS AND WRITTEN MATERIAL APPEARING HEREIN CONSTITUTE ORIGINAL AND UNPUBLISHED WORK OF SMS ARCHITECTS AND MAY NOT BE DUPLICATED, USED OR DISCLOSED WITHOUT WRITTEN CONSENT OF THE ARCHITECT

PROJECT NO. 22039

DATE JANUARY 25, 2023

DRAWING TITLE
CEILING DETAILS

DRAWING NO.
A9.6.1

C:\Users\Brandt\Documents\22039_DPH_Building 12-Arch_brandt@sms-arch.com.rvt

10/8/2024 5:12:52 PM

CITY OF DANA POINT
PLANNING DIVISION

This plan has been reviewed for ZONING ONLY and meets the requirements of Title 9 of the Dana Point Municipal Code.

APPROVED KBN

DATE 10/21/24

COMMENTS BUILDING 12 (OC PERMIT PKG21-0516) PER CDP13-0018(I).

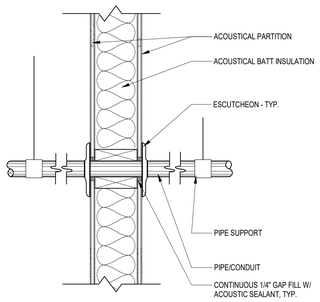

SMALL PIPE PENETRATION 9 / A9.8.1
1 1/2" = 1'-0"

NOTE:
IF PIPE IS SUSPENDED FROM OR DIRECTLY ATTACHED TO STRUCTURE OR OTHER BUILDING ELEMENTS, USE 1/2" THICK 40 DUROMETER NEOPRENE AS SLEEVE BETWEEN PIPE AND PIPE COLLAR.

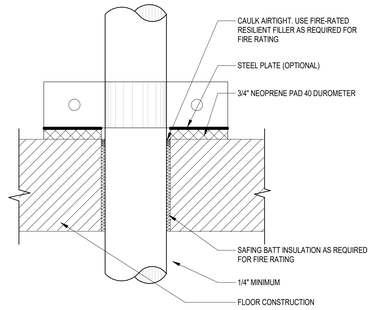

PIPE ISOLATION @ FLOOR 5 / A9.8.1
3" = 1'-0"

Zoning: CanningK **11/13/2024**

Building&Safety: OCPWAzarvandB **12/22/2025**

Permits: BNR21-0246, ELE21-0853, MEC21-0514, PLB21-0900

County of Orange - OC Public Works
OC Development Services
APPROVED

This set of plans and specifications must be kept on the job at all times. It is unlawful to make any changes or alterations to these plans without written permission from OC Public Works, OC Development Services of Orange County. The stamping of these plan specifications SHALL NOT be held to permit or be an approval of the violation of any provisions of any County Ordinance or State law.

Hind Tahtehsare
BUILDING OFFICIAL

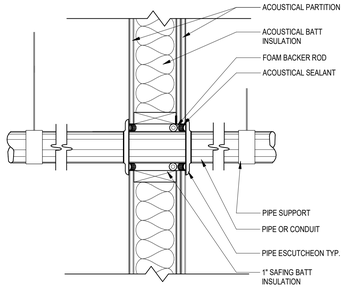

LARGE PIPE PENETRATION 10 / A9.8.1
1 1/2" = 1'-0"

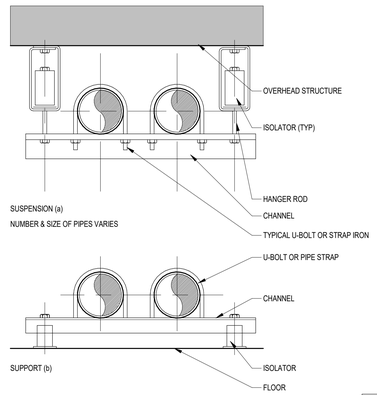

TRAPEZE PIPE MOUNT 6 / A9.8.1
12" = 1'-0"

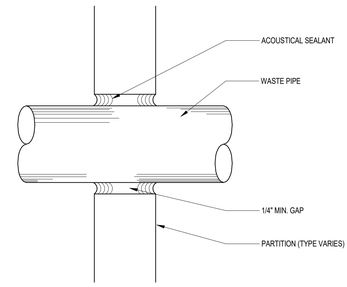

NOTES:
1. SPACE BETWEEN PIPE AND SLEEVE SHALL BE FREE OF ANY FOREIGN MATERIALS.
2. PIPE SHALL NOT CONTACT STRUCTURE AT ANY TIME. WEDGES SHALL NOT BE USED TO MAINTAIN PIPE IN POSITION.
3. PIPE MUST BE APPROXIMATELY CENTERED IN OPENING. PROVIDE ADDITIONAL CLEARANCE FOR POSITIONAL CHANGE OF PIPE DUE TO LOADING OF PIPE OR OPERATION SYSTEM.

ISOLATER PIPE PENETRATION 2 / A9.8.1
12" = 1'-0"

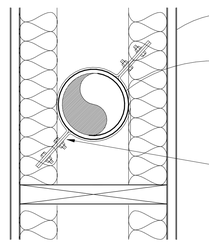

PIPE ISOLATION @ DEMISING WALL 11 / A9.8.1
12" = 1'-0"

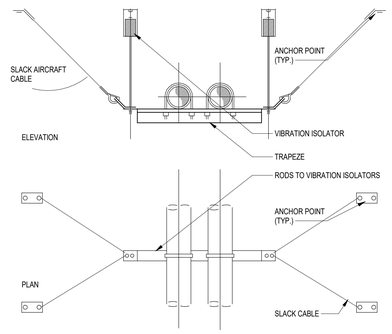

NOTES:
1. CABLE, ANCHORS, ETC. TO BE CHECKED BY STRUCTURAL ENGINEER.
2. MAXIMUM SPACING INTERVAL TO BE DETERMINED BY STRUCTURAL ENGINEER.
3. LOCATE VIBRATION ISOLATION HANGER DIRECTLY ABOVE SEISMIC RESTRAINT AS INDICATED.
4. ISOLATORS MUST BE MODIFIED WITH UPPER TRAVEL LIMIT STOP

SUSPENDED PIPE TRAPEZE 7 / A9.8.1
12" = 1'-0"

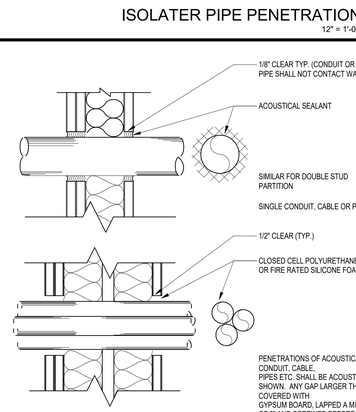

PARTITION PENETRATION 3 / A9.8.1
12" = 1'-0"

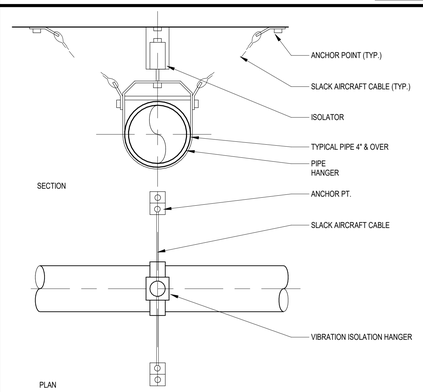

LATERAL RESTRAINT PIPING 8 / A9.8.1
12" = 1'-0"

SMS ARCHITECTS
100 Progress | Suite 250
Irvine, California 92618
949.757.3240 | www.sms-arch.com

CONSTANT

DANA POINT HARBOR PARTNERS

PROJECT NAME
DANA POINT HARBOR COMMERCIAL CORE
BUILDING 12
1290 HARBOR WAY
DANA POINT, CA 92629

CLIENT
BWP PROPERTIES
BURNHAM|WARD

No.	DATE	ISSUE
	10/28/2022	100% SCHEMATIC DESIGN
B	10/09/2024	CITY PLANNING RESUBMITTAL

DRAWINGS AND WRITTEN MATERIAL APPEARING HEREIN CONSTITUTE ORIGINAL AND UNPUBLISHED WORK OF SMS ARCHITECTS AND MAY NOT BE DUPLICATED, USED OR DISCLOSED WITHOUT WRITTEN CONSENT OF THE ARCHITECT

PROJECT NO. 22039

DATE JANUARY 25, 2023

DRAWING TITLE
ACOUSTICAL DETAILS

DRAWING NO.
A9.8.1

C:\Users\Barrett\Documents\22039_DPH_Building 12-Arch_barrett@sms-arch.com.rvt

10/8/2024 5:12:56 PM

CITY OF DANA POINT
PLANNING DIVISION

This plan has been reviewed for ZONING ONLY and meets the requirements of Title 9 of the Dana Point Municipal Code.

APPROVED KBN

DATE 10/21/24

COMMENTS BUILDING 12 (OC PERMIT PKG21-0516) PER CDP13-0018(I).

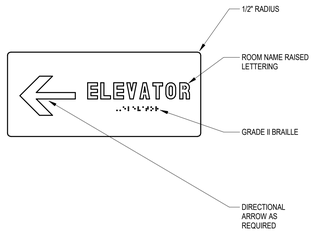

DIRECTIONAL SIGN 9
1/2" = 1'-0" A9.9.1

GENERAL SIGN NOTES

1. WHERE PERMANENT IDENTIFICATION IS PROVIDED FOR ROOMS AND SPACES, SIGNS SHALL BE INSTALLED ON THE WALL ADJACENT TO THE LATCH SIDE OF THE DOOR. WHERE THERE IS NO WALL SPACE TO THE LATCH SIDE OF THE DOOR, INCLUDING AT DOUBLE LEAF DOORS, SIGNS SHALL BE PLACED ON THE NEAREST ADJACENT WALL.
2. ALL INTERIOR PLASTIC SIGNS SHALL BE 1/8" THICK MINIMUM U.N.O.
3. ALL EXTERIOR PLASTIC SIGNS SHALL BE 1/4" THICK MINIMUM.
4. VERIFY EXACT SIGN TEXT WITH DOOR & ROOM NAMES AND AS.
5. VERIFY ALL ROOM NUMBERS WITH OWNER.
6. VERIFY TEXT ON ENGRAVED INSERTS WITH OWNER.
7. VERIFY ORIENTATION OF DIRECTIONAL ARROWS.
8. VERIFY MAXIMUM OCCUPANCY QUANTITY WITH FIRE MARSHALL.
9. ALL EXTERIOR WALL MOUNTED SIGNS AND ALL INTERIOR WALL MOUNTED SIGNS ATTACHED TO MASONRY, PLASTER, OR CERAMIC TILE SHALL BE MECHANICALLY FASTENED WITH VANDALPROOF FASTENERS THROUGH THE WALL FINISH AND INTO SOLID WOOD OR METAL BACKING.
10. ALL INTERIOR WALL MOUNTED SIGNS SECURED TO DRYWALL SHALL BE ADHESIVELY APPLIED.
11. ALL PLASTIC SIGNS ADHESIVELY APPLIED TO GLASS SHALL HAVE AN ADDITIONAL PLASTIC BACKING THE SAME SIZE AS THE SIGN ADHESIVELY APPLIED TO THE OTHER SIDE OF THE GLASS.
12. THESE SIGNS ARE FOR CODE COMPLIANCE REQUIREMENTS AND NOT DESIGN INTENT. ALL SIGNS SHOULD BE DESIGNED PER SIGNAGE PACKAGE.

Zoning: CanningK 11/13/2024

Building&Safety: OCPWAzarvandB 12/22/2025

Permits: BNR21-0246, ELE21-0853, MEC21-0514, PLB21-0900

County of Orange - OC Public Works
OC Development Services
APPROVED

This set of plans and specifications must be kept on the job at all times. It is unlawful to make any changes or alterations to these plans without written permission from OC Public Works, OC Development Services of Orange County. The stamping of these plan specifications SHALL NOT be held to permit or be an approval of the violation of any provisions of any County Ordinance or State law.

Hind Tahtabaee
BUILDING OFFICIAL

NOTE: AT EXIT DISCHARGE LEVEL, SIGN SHALL INCLUDE A RAISED FIVE-POINTED STAR TO THE LEFT OF THE IDENTIFYING FLOOR LEVEL.

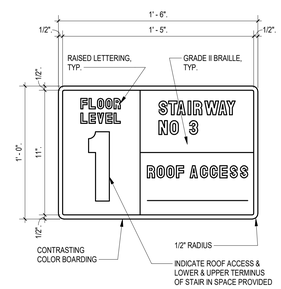

STAIR IDENTIFICATION SIGN 10
1/2" = 1'-0" A9.9.1

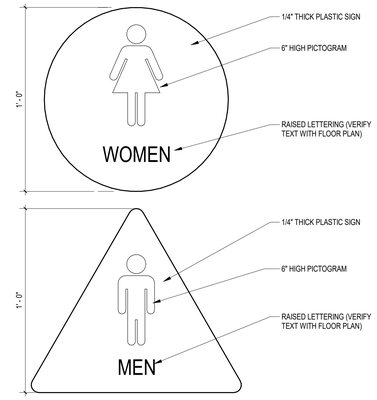

MEN WOMENS RESTROOM DOOR SIGN 6
3" = 1'-0" A9.9.1

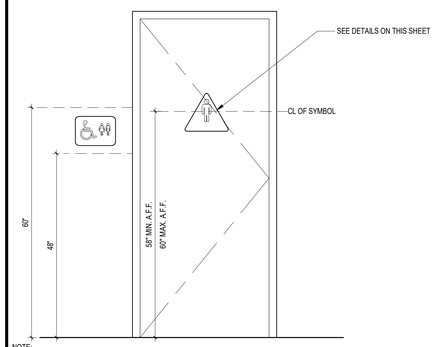

NOTE:
IN ADDITION TO THE STANDARD DOOR SYMBOLS MOUNTED AT 60" A.F.F. ON THE RESTROOM DOORS, SIGNS AS DETAILED AT 4 & 6/A.9.9.1 WILL BE MOUNTED BETWEEN 58" - 60" A.F.F. ON WALL AT LATCH SIDE OF DOOR.

TACTILE CHARACTERS ON SIGNS MUST BE LOCATED 48" MINIMUM ABOVE THE FINISHED FLOOR MEASURED FROM THE BASELINE OF THE LOWEST BRAILLE CELLS AND 60" MAXIMUM ABOVE THE FINISH FLOOR, MEASURED FROM THE BASELINE OF THE HIGHEST LINE OF RAISED CHARACTERS.

RESTROOM SIGN LOCATIONS 2
3/4" = 1'-0" A9.9.1

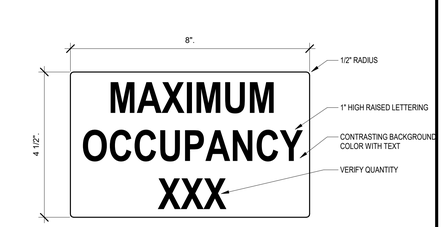

OCCUPANCY SIGN 7
6" = 1'-0" A9.9.1

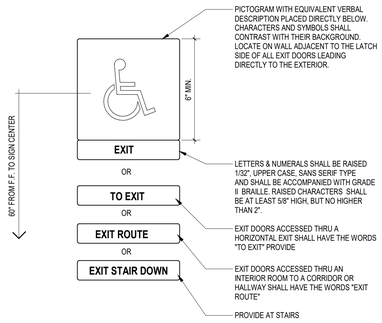

TACTILE EXIT SIGN 3
1/2" = 1'-0" A9.9.1

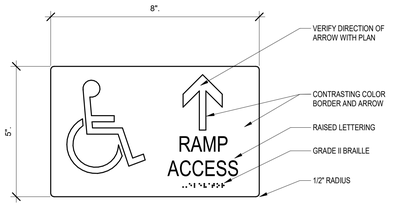

RAMP ACCESS SIGN 8
1/2" = 1'-0" A9.9.1

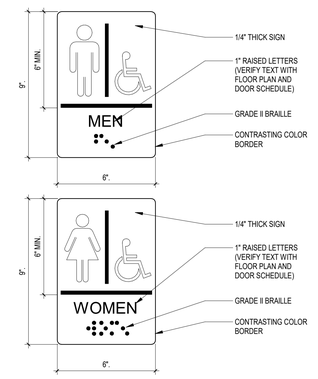

MEN WOMEN RESTROOM WALL SIGN 4
1/2" = 1'-0" A9.9.1

SMS ARCHITECTS
100 Progress | Suite 250
Irvine, California 92618
949.757.3240 | www.sms-arch.com

CONSTANT

DANA POINT HARBOR PARTNERS

PROJECT NAME
DANA POINT HARBOR COMMERCIAL CORE
BUILDING 12
1290 HARBOR WAY
DANA POINT, CA 92629

CLIENT
BURNHAM|WARD PROPERTIES
BWP

No.	DATE	ISSUE
	9/30/2022	50% SCHEMATIC DESIGN
	10/28/2022	100% SCHEMATIC DESIGN
	03/17/2023	50% CONSTRUCTION DOCUMENTS
A	04/21/2023	COUNTY RESUBMITTAL
B	10/09/2024	CITY PLANNING RESUBMITTAL

DRAWINGS AND WRITTEN MATERIAL APPEARING HEREIN CONSTITUTE ORIGINAL AND UNPUBLISHED WORK OF SMS ARCHITECTS AND MAY NOT BE DUPLICATED, USED OR DISCLOSED WITHOUT WRITTEN CONSENT OF THE ARCHITECT

PROJECT NO. 22039

DATE JANUARY 25, 2023

DRAWING TITLE
SIGNAGE DETAILS

DRAWING NO.
A9.9.1

C:\Users\Brandt\Documents\22039_DPH_Building 12-Arch_brandt@sms-arch.com.rvt

10/8/2024 5:12:58 PM

CITY OF DANA POINT
PLANNING DIVISION

This plan has been reviewed for ZONING ONLY and meets the requirements of Title 9 of the Dana Point Municipal Code.

APPROVED KBN

DATE 10/21/24

COMMENTS BUILDING 12 (OC PERMIT PKG21-0516) PER CDP13-0018(I).

ROOM FINISH SCHEDULE

Number	Name	Floor	Wall	Base	Ceiling	Comments
Not Placed						
12-141	Room					
BUILDING 12 FINISHED FLOOR						
12-100	RESTAURANT	-	-	-	-	
12-105	WOMEN'S RESTROOM	C-102	-	-	-	SEE ELEVATIONS, FINISH FLOOR, AND RCP
12-110	JANITOR/FIRE RISER ROOM	C-101	PT-09	B-101	PT-09	FRP 36" AFF
12-115	ELECTRICAL ROOM	C-101	PT-09	B-101	PT-09	
12-120	ELEVATOR MACHINE ROOM	C-101	PT-09	B-101	PT-09	
12-125	ELEVATOR	-	-	-	-	SEE ELEVATIONS, FINISH FLOOR, AND RCP
12-130	MEN'S RESTROOM	C-102	-	-	-	SEE ELEVATIONS, FINISH FLOOR, AND RCP
12-135	BOATER SERVICE SHOWER	C-102	-	-	-	SEE ELEVATIONS, FINISH FLOOR, AND RCP
12-140	OUTDOOR DINING	-	-	-	-	
12-145	CIRCULATION	-	-	-	-	
12-150	RESTAURANT	-	-	-	-	
LEVEL 2						
12-200	RESTAURANT	-	-	-	-	
12-205	ROOF ACCESS	C-101	PT-09	B-101	PT-09	
12-210	OUTDOOR DINING	-	-	-	-	
12-215	ELEVATOR	-	-	-	-	SEE ELEVATIONS, FINISH FLOOR, AND RCP

DOOR SCHEDULE

Door Number	Type	Width	Height	TKNS	Door	Glass	Frame	Fire	Head	Jamb	Sill	STC	Door Hardware	Comments
BUILDING 12 FINISHED FLOOR														
12-100A	C	6'-0"	9'-10"	1 3/4"	WD	GL-01	WD	-	18/A8.6.1	15/A8.6.1	16/A8.6.1			
12-100B-PH	A	3'-0"	7'-0"	1 3/4"	HM	-	STL	-	2/A8.6.1	3/A8.6.1	4/A8.6.1			PANIC HARDWARE
12-100C	B	13'-2"	10'-0"	1 3/4"	WD	GL-01	WD	-	9/A8.6.1	10/A8.6.1	7/A8.6.1			Bi-FOLD DOOR
12-100D	B	13'-2"	10'-0"	1 3/4"	WD	GL-01	WD	-	9/A8.6.1	10/A8.6.1	7/A8.6.1			Bi-FOLD DOOR
12-100E	B	11'-8"	10'-0"	1 3/4"	WD	GL-01	WD	-	9/A8.6.1	10/A8.6.1	7/A8.6.1			Bi-FOLD DOOR
12-100F	B	11'-8"	10'-0"	1 3/4"	WD	GL-01	WD	-	9/A8.6.1	10/A8.6.1	7/A8.6.1			Bi-FOLD DOOR
12-100G-PH	C	6'-0"	7'-11"	1 3/4"	WD	GL-01	WD	-	18/A8.6.1	15/A8.6.1	16/A8.6.1			PANIC HARDWARE
12-100H	B	29'-9"	10'-0"	1 3/4"	WD	GL-01	WD	-	9/A8.6.1	10/A8.6.1	7/A8.6.1			Bi-FOLD DOOR
12-100I	C	6'-0"	7'-11"	1 3/4"	WD	GL-01	WD	-	18/A8.6.1	15/A8.6.1	16/A8.6.1			
12-100J-PH	D	3'-1"	7'-11"	1 3/4"	WD	GL-01	WD	-	18/A8.6.1	15/A8.6.1	16/A8.6.1			PANIC HARDWARE
12-100K	B	11'-9"	10'-0"	1 3/4"	WD	GL-01	WD	-	9/A8.6.1	10/A8.6.1	7/A8.6.1			Bi-FOLD DOOR
12-105A	E	3'-0"	7'-0"	1 3/4"	HM	-	STL	-	2/A8.6.1	3/A8.6.1	4/A8.6.1			PROVIED LOUVER PER MECHANICAL
12-110A	A	3'-0"	7'-0"	1 3/4"	HM	-	STL	-	2/A8.6.1	3/A8.6.1	4/A8.6.1			
12-115A	A	3'-0"	7'-0"	1 3/4"	HM	-	STL	-	2/A8.6.1	3/A8.6.1	4/A8.6.1			
12-120A-PH	A	3'-0"	7'-0"	1 3/4"	HM	-	STL	-	2/A8.6.1	3/A8.6.1	4/A8.6.1			PANIC HARDWARE
12-120B-PH	E	3'-0"	7'-0"	1 3/4"	HM	-	STL	-	2/A8.6.1	3/A8.6.1	4/A8.6.1			PANIC HARDWARE; PROVIED LOUVER PER MECHANICAL
12-125A	E	3'-0"	7'-0"	1 3/4"	HM	-	STL	60 MIN.	2/A8.6.1	3/A8.6.1	4/A8.6.1			PROVIED LOUVER PER MECHANICAL
12-130A	E	3'-0"	7'-0"	1 3/4"	HM	-	STL	-	2/A8.6.1	3/A8.6.1	4/A8.6.1			PROVIED LOUVER PER MECHANICAL
LEVEL 2														
12-200-A	C	6'-0"	9'-7"	1 3/4"	WD	GL-01	WD		17/A8.6.1	15/A8.6.1	6/A8.2.1			
12-200B-PH	A	3'-0"	7'-0"	1 3/4"	HM	-	STL	-	2/A8.6.1	3/A8.6.1	8/A8.6.1			PANIC HARDWARE
12-200C	B	12'-0"	10'-0"	1 3/4"	WD	GL-01	WD	-	5/A8.6.1	6/A8.6.1	7/A8.2.1			Bi-FOLD DOOR
12-200D	B	13'-2"	10'-0"	1 3/4"	WD	GL-01	WD	-	5/A8.6.1	6/A8.6.1	7/A8.2.1			Bi-FOLD DOOR
12-200E	B	13'-2"	10'-0"	1 3/4"	WD	GL-01	WD	-	5/A8.6.1	6/A8.6.1	7/A8.2.1			Bi-FOLD DOOR
12-200F	B	11'-8"	10'-0"	1 3/4"	WD	GL-01	WD	-	5/A8.6.1	6/A8.6.1	7/A8.2.1			Bi-FOLD DOOR
12-200G	B	11'-8"	10'-0"	1 3/4"	WD	GL-01	WD	-	5/A8.6.1	6/A8.6.1	7/A8.2.1			Bi-FOLD DOOR
12-200I-PH	D	3'-0"	9'-10"	1 3/4"	WD	GL-01	WD	-	17/A8.6.1	15/A8.6.1	6/A8.2.1			PANIC HARDWARE
12-200J	B	11'-8"	10'-0"	1 3/4"	WD	GL-01	WD	-	5/A8.6.1	6/A8.6.1	7/A8.2.1			Bi-FOLD DOOR
12-200K	B	11'-8"	10'-0"	1 3/4"	WD	GL-01	WD	-	5/A8.6.1	8/A8.6.1	7/A8.2.1			Bi-FOLD DOOR
12-205A	A	3'-0"	7'-0"	1 3/4"	HM	-	STL	-	2/A8.6.1	3/A8.6.1	8/A8.2.1			

SCHEDULE - INTERIOR FINISHES

NO.	MANUFACTURER	MODEL # / STYLE	COLOR / FINISH	DETAILS
BASE				
B-101	ROPPE	4" COVE BASE / REVEAL	BLACK	-
CONCRETE				
C-101	-	NATURAL CONCRETE	CLEAR SEALED	
C-102	-	NATURAL CONCRETE	NATURAL	READY FOR TENANT FINISHES
CONCRETE PAVER				
CT-01	ORCO	24x48 PAVER ON PEDESTAL SYSTEM	-	-
FIBER REINFORCED PLASTIC				
FRP-01	MARLITE	-	P-100 WHITE, PEBBLE	-
HANDRAIL				
H-101	MITSUBISHI	2" FLAT WITH RETURN	POWDERCOATED BLACK	-
METAL				
MTL-102	WILSONART	STAINLESS STEEL 4830	BRUSHED	-
PAINT				
PT-09	SHERWIN WILLIAMS	SW7005	PURE WHITE	FLAT
SOLID SURFACE				
SS-01	SILESTONE		WHITE STORM	BASIC EASED EDGE
TILE				
T-101	DALTILE	COLOR WHEEL COLLECTION LINEAR	ARTIC WHITE 0790	2"X8" LINEAR
T-102	ARIZONA TILE	SAVANNAH SERIES	COFFEE	6"X24" TILE
T-103	ARIZONA TILE	SAVANNAH SERIES	CREAM	COMBINATION 6"X24" AND 8"X40" (LAY HORIZONTAL)
T-104	CROSSVILLE	RETRO ACTIVE 2.0	SNOW BLIND	3" X 12"
T-105	LANDMARK CERAMICS	PORCELIN TILE	PASSION SILVER	12"X24"
T-106	CROSSVILLE	NOTORIOUS	SUSPENSE	
T-107	CROSSVILLE	NOTORIOUS - MOSAIC	SUSPENSE	
T-108	DALTILE	SADDLEBROOK OAK TRAIL	SD13	6"X36" TILE
WALL COVERING				
WC-101	TERRAMAI	MOONSCAPE PANELING	LIGHT	-

DOOR ELEVATIONS

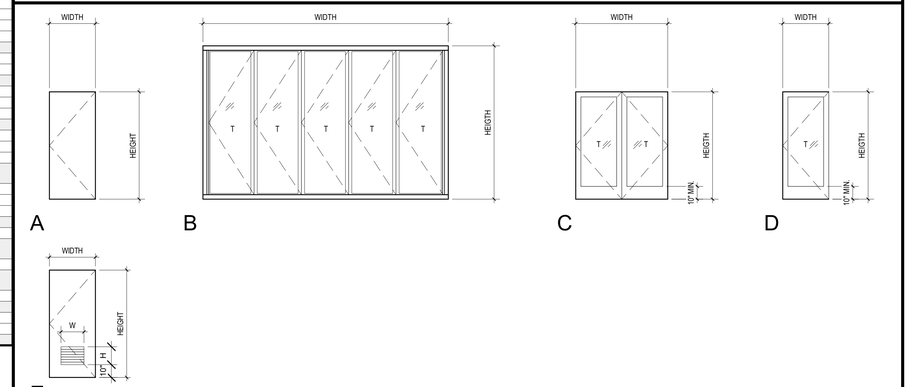

FINISH SCHEDULE NOTES

1. ALL COVED FLOOR BASE SHALL EXTEND 4" TO 6" UP WALL, COUNTERS, CURBS AND TOEKICKS WITH A MINIMUM 3/8" RADIUS COVE. THE BASE COVE SHALL BE INTEGRAL UNIT WITH THE FLOOR.
2. WATER RESISTANT WALLS (I.E., CERAMIC TILE, FRP, STAINLESS STEEL) ARE REQUIRED BEHIND ALL SINKS AND DISHWASHERS. WATER RESISTANT MATERIAL SHALL BE A MINIMUM OF 8 FEET HIGH FROM THE TOP OF THE FLOOR BASE.
3. IN RESTROOMS, WATER RESISTANT MATERIAL IS REQUIRED FROM THE TOP OF COVE BASE TO A MINIMUM HEIGHT OF 4 FEET.
4. ALL TYPE I HOODS SHALL BE MANUFACTURED AND INSTALLED IN ACCORDANCE WITH THE UL LISTING.
5. PROVIDE SIDE GUARDS AT OPEN ENDS OF SNEEZE GUARDS.
6. FOAM PLASTICS SHALL NOT BE USED AS INTERIOR FINISH EXCEPT AS PROVIDED UNDER SECTION 2604.2 (801.8 CBC).
7. ALL INTERIOR WALL OR CEILING FINISHES (EXCEPT CLASS A) LESS THAN 1/4" THICK SHALL BE APPLIED DIRECTLY AGAINST A NON COMBUSTIBLE BACKING UNLESS IT IS NON COMBUSTIBLE OR IT IS IN ACCORDANCE WITH AN APPROVED TESTED ASSEMBLY (803.13.4 CBC).
8. ALL CEILING MATERIALS SHALL NOT EXCEED THE FLAME SPREAD INDEX IN CBC 803.9

DOOR NOTES

DOOR LEGEND

HC - HOLLOW CORE METAL DOOR
SC - SOLID CORE WOOD
WD - WOOD
HM - HOLLOW METAL
AL - ALUMINUM
PL - PLYWOOD
STL - STEEL
PT - PAINTED
ST - CUSTOM STAIN PER SPEC. SECTION 8210

ADDITIONAL DOOR AND NOTES:

1. DOORS SHALL MAINTAIN A CLEAR WIDTH OF 32" OR PER TABLE 1005.1 WHICH EVER IS GREATER
2. DOORS SHALL MAINTAIN A CLEAR HEIGHT OF 6'-8"
3. DOORS SHALL OPEN A MINIMUM OF 90 °
4. THE MAXIMUM DOOR WIDTH OF A SWINGING LEAF SHALL BE NOMINAL 48"
5. EXIT DOORS SHALL BE SIDE HINGED SWINGING TYPE
6. THRESHOLDS AT DOORWAYS SHALL NOT EXCEED .5" IN HEIGHT
7. ALL RATED DOORS SHALL HAVE CLOSERS AND SMOKE GASKETS
8. THE BOTTOM 10" OF ALL DOORS EXCEPT AUTOMATIC AND SLIDING DOORS SHALL HAVE A SMOOTH UNINTERRUPTED SURFACE TO ALLOW THE DOOR TO BE OPENED TO A WHEELCHAIR FOOTREST WITHOUT CREATING A TRAP OR HAZARDOUS CONDITION
9. PROVIDE 18" CLR. ON PULL SIDE OF ALL INTERIOR DOOR AND 24" CLR AT EXTERIORS DOORS
10. ALL EGRESS DOORS SHALL BE READILY OPENABLE FROM THE EGRESS SIDE WITHOUT THE USE OF A KEY OR SPECIAL KNOWLEDGE OR EFFORT.
11. PROVIDE A SIGN ON OR NEAR THE EXIT DOOR, READING "THIS DOOR TO REMAIN UNLOCKED WHEN BUILDING IS OCCUPIED"
12. PANIC DEVICE HAVE BEEN PROVIDED FOR ALL DOORS WITH AN OCCUPANCY OVER 49
13. DOORS WITHIN A FIRE RATED ASSEMBLY TO BE CONSTRUCTED WITH THE SAME FIRE RATING AS THE REST OF ITS ENCLOSURE ASSEMBLY
14. REGARDLESS OF OCCUPANT LOAD, A FLOOR OR LANDING NOT MORE THAN 1-1/2" BELOW THE THRESHOLD IS REQUIRED ON EACH SIDE OF AN EGRESS DOOR
15. THE LOCKING DEVICE IS READILY DISTINGUISHABLE AS LOCKED.
16. A READILY VISIBLE DURABLE SIGN IS POSTED ON THE EGRESS SIDE ON OR ADJACENT TO THE DOOR STATING: THIS DOOR TO REMAIN UNLOCKED WHEN THIS SPACE IS OCCUPIED. THE SIGN SHALL BE IN LETTERS 1" (24mm) HIGH ON CONTRASTING BACKGROUND.
17. THE USE OF THE KEY-OPERATED LOCKING DEVICE IS REVOCABLE BY THE FIRE CODE OFFICIAL FOR DUE CAUSE.

STC SOUND RATING NOTES:

A. STC RATED DOORS TO BE PROVIDED WITH HEAD, JAMB, AND DOOR BOTTOM GASKETS.

Zoning: CanningK 11/13/2024

Building&Safety: OCPWAzarvandB 12/22/2025

Permits: BNR21-0246, ELE21-0853, MEC21-0514, PLB21-0900

County of Orange - OC Public Works
OC Development Services
APPROVED

This set of plans and specifications must be kept on the job at all times. It is unlawful to make any changes or alterations to these plans without written permission from OC Public Works, OC Development Services of Orange County. The stamping of these plan specifications SHALL NOT be held to permit or be an approval of the violation of any provisions of any County Ordinance or State law.

Hani Tahsttsiani
BUILDING OFFICIAL

SMS ARCHITECTS
100 Progress | Suite 250
Irvine, California 92618
949.757.3240 | www.sms-arch.com

CONSTANT

DANA POINT HARBOR PARTNERS

PROJECT NAME
DANA POINT HARBOR COMMERCIAL CORE
BUILDING 12
1290 HARBOR WAY
DANA POINT, CA 92629

CLIENT
BURNHAM | WARD PROPERTIES
BWP

LICENSED ARCHITECT
BANDON DEDMON
No. C-37432
11.30.23
Exp. Date
STATE OF CALIFORNIA

No.	DATE	ISSUE
	9/30/2022	50% SCHEMATIC DESIGN
	10/28/2022	100% SCHEMATIC DESIGN
	02/10/2023	100% DESIGN DEVELOPMENT
	03/17/2023	50% CONSTRUCTION DOCUMENTS
A	04/21/2023	COUNTY RESUBMITTAL
B	10/09/2024	CITY PLANNING RESUBMITTAL

DRAWINGS AND WRITTEN MATERIAL APPEARING HEREIN CONSTITUTE ORIGINAL AND UNPUBLISHED WORK OF SMS ARCHITECTS AND MAY NOT BE DUPLICATED, USED OR DISCLOSED WITHOUT WRITTEN CONSENT OF THE ARCHITECT

PROJECT NO 22039

DATE JANUARY 25, 2023

DRAWING TITLE
DOOR SCHEDULE

DRAWING NO
A10.1.1

C:\Users\Brandi\Documents\22039_DPH_Building 12-Arch_brandi@sms-arch.com.rvt

10/8/2024 5:13:02 PM

WOOD

1. ALL STRUCTURAL LUMBER SHALL BE DOUGLAS FIR, VISUALLY GRADED OR MACHINE GRADED UNDER THE STANDARD GRADING RULES, NO. 17 OF THE WEST COAST LUMBER INSPECTION BUREAU. ALL FRAMING MEMBERS SHALL BE AS FOLLOWS:

USE	GRADE
2x4 TOP PLATES	DF STUD
2x4 STUDS (≤ 10'-0") , 2x4 BLOCKING	DF STUD
2x4 STUDS (> 10'-0")	DF NO. 2
2x6 TOP PLATES	DF NO. 2
2x6 STUDS (≤ 10'-0"), 2x6 BLOCKING	DF STUD
2x6 STUDS (> 10'-0")	DF NO. 2
6x OR LARGER BEAMS AND POST	DF NO. 1 (UNO)
ALL OTHER SAWN LUMBER	DF NO. 2

2. ALL WOOD BEARING ON CONCRETE OR MASONRY IN DIRECT CONTACT WITH EARTH SHALL BE PRESSURE TREATED DOUGLAS FIR IN ACCORDANCE WITH CODE SECTION 2303.1.9 AND 2304.12. ALL CUTS, HOLES & NOTCHES BE TREATED WITH A PRESERVATIVE APPROVED BY THE STRUCTURAL ENGINEER.

3. FASTENERS FOR PRESSURE-PRESERVATIVE TREATED WOOD SHALL BE HOT-DIPPED ZINC COATED GALVANIZED, STAINLESS STEEL, SILICON BRONZE OR COPPER PER CODE SECTION 2304.10.5.

4. ALL STRUCTURAL PLYWOOD SHEATHING SHALL BE DOUGLAS FIR STANDARD GRADE STRUCTURAL I WITH EXTERIOR GLUE CONFORMING TO THE LATEST EDITION OF PS 1 UNO. ALL STRUCTURAL COMPOSITE SHEATHING SHALL BE DOUGLAS FIR STANDARD GRADE STRUCTURAL I WITH EXTERIOR GLUE CONFORMING TO THE LATEST EDITION OF PS 2 UNO. ALL PANELS SHALL BEAR LEGIBLE DFPA STAMPS.

5. ALL FLOOR AND ROOF SHEATHING SHALL BE LAID FACE GRAIN PERPENDICULAR TO FRAMING UNO. ALL SHEATHING SHALL BE APPROVED BY THE BUILDING INSPECTOR BEFORE COVERING.

6. UNLESS NOTED OTHERWISE, ALL WOOD SILL PLATE UNDER BEARING, EXTERIOR, OR SHEAR WALLS IN CONTACT WITH CONCRETE OR MASONRY SHALL BE BOLTED TO CONCRETE OR MASONRY WITH 5/8"Ø ANCHOR RODS W/ 7" MIN CONCRETE/MASONRY EMBED AT 6'-0" OC FOR STRUCTURES TWO STORIES OR LESS AND 4'-0" OC FOR STRUCTURES OVER TWO STORIES IN HEIGHT BEGINNING AT 4" MIN AND 12" MAX FROM EACH END OF THE PLATES.

7. ALL BOLT HEADS AND NUTS WHICH BEAR AGAINST THE FACE OF WOOD MEMBERS SHALL BE PROVIDED WITH 2"x2"x3/16" STEEL PLATE WASHERS UNO. ALL ANCHOR BOLTS FOR SHEAR WALLS SHALL BE PROVIDED WITH A 3"x3"x0.229" MIN STEEL PLATE WASHER UNLESS NOTED OTHERWISE.

8. ALL NAILS FOR CONNECTING WOOD MEMBERS SHALL BE COMMON NAILS, MINIMUM NAILING REQUIREMENTS OUTLINED IN TABLE 2304.10.1 SHALL BE FOLLOWED UNLESS NOTED OTHERWISE.

9. RETIGHTEN BOLTS BEFORE CLOSING-IN.

10. USE OF MACHINE NAILING IS SUBJECT TO A SATISFACTORY JOBSITE DEMONSTRATION FOR EACH PROJECT AND THE APPROVAL BY THE ARCHITECT OR STRUCTURAL ENGINEER AND THE BUILDING DEPARTMENT. THE APPROVAL IS SUBJECT TO CONTINUED SATISFACTORY PERFORMANCE. MACHINE NAILING WILL NOT BE APPROVED IN 5/16" SHEATHING. IF NAIL HEADS PENETRATE THE OUTER PLY MORE THAN WOULD BE NORMAL FOR A HAND HAMMER OR IF MINIMUM ALLOWABLE EDGE DISTANCES ARE NOT MAINTAINED, THE PERFORMANCE WILL BE DEEMED UNSATISFACTORY.

11. ALL WOOD HARDWARE CONNECTORS SHALL BE SIMPSON STRONG-TIE UNLESS NOTED OTHERWISE.

12. PROVIDE FULL DEPTH BLOCKING AT 4'-0" OC BETWEEN ADJACENT JOISTS UNDER ALL PERPENDICULAR PARTITIONS. PROVIDE DOUBLE JOIST UNDER ALL PARALLEL PARTITIONS UNLESS NOTED OTHERWISE.

13. STRUCTURAL MEMBERS SHALL NOT BE CUT FOR PIPES, CONDUIT, ETC. UNLESS SPECIFICALLY NOTED OR DETAILED FOR SUCH ALTERATIONS.

14. ROOF SHEATHING SHALL BE INSPECTED PRIOR TO PLACING INSULATION AND ROOFING.

15. SOLID BLOCKING (2x MIN) SHALL BE PLACED BETWEEN JOISTS OR RAFTERS AT ALL SUPPORTS.

16. ALL ANCHOR RODS SHALL CONFORM TO ASTM F1554. ALL BOLTS SHALL CONFORM TO ASTM A307.

17. HOLES FOR BOLTS SHALL BE BORED 1/32" TO 1/16" LARGER THAN NOMINAL BOLT DIAMETER. (THIS INCLUDES HOLES FOR ANCHOR RODS IN SILL PLATE).

18. JOIST CONNECTIONS SHALL BE SIMPSON 'LUS' UNLESS NOTED OTHERWISE.

19. ALL POST CONNECTIONS LOCATED DIRECTLY ON CONCRETE SHALL BE SIMPSON 'CB' UNLESS NOTED OTHERWISE.

20. FILL ALL NAIL HOLES OF WOOD CONNECTION HARDWARE (STRAPS, HANGERS, ETC.)

21. SHEAR PANEL BLOCKING NOTED ON PLANS AND DETAILS SHALL BE CONSTRUCTED OF SOLID 2x FRAMING W/ 3/8" MIN SHEATHING W/ 8d AT 6" OC UNO. NAIL SHEAR PANEL BLOCKS TO THE ADJACENT TRUSSES W/ (2) 16d TOP AND BOTTOM W/ 16d AT 12" OC ALONG HEIGHT MIN. DO NOT PENETRATE STRUCTURAL PANELS UNLESS APPROVED BY STRUCTURAL ENGINEER OF RECORD.

STRUCTURAL STEEL

1. STRUCTURAL STEEL SHALL BE DETAILED, FABRICATED AND ERECTED BY AN APPROVED AND LICENSED FABRICATOR IN ACCORDANCE WITH THE AISC SPECIFICATION FOR THE DESIGN, FABRICATION AND ERECTION OF STRUCTURAL STEEL FOR BUILDINGS (LATEST EDITION), AND WITH CHAPTERS 17 AND 22 OF THE CODE.

2. ALL STRUCTURAL STEEL SHALL CONFORM TO THE ASTM DESIGNATION AS INDICATED BELOW (UNO):

WF & WT SHAPES	A992
ANGLES, CHANNELS, PLATES, BARS, CONNECTION PLATES, AND MISC	A36
PIPE SECTIONS	A53, GRADE B
HSS SECTIONS	A500, GRADE C
BOLTS	A325
TWIST-OFF TYPE BOLTS	F1852
BOLTS IN CONCRETE	F1554 GR 36 OR F1554 GR 55 S1 (WELDABLE)

3. THE STRUCTURAL STEEL FABRICATOR SHALL FURNISH SHOP DRAWINGS OF ALL STEEL TO THE ARCHITECT FOR ARCHITECT'S AND STRUCTURAL ENGINEER'S REVIEW AND APPROVAL BEFORE FABRICATION.

4. BOLT HOLES USED IN STEEL SHALL BE 1/16" LARGER IN DIAMETER THAN NOMINAL SIZE OF BOLT USED, EXCEPT AS NOTED.

5. ALL STRUCTURAL STEEL SURFACES THAT ARE ENCASED IN CONCRETE, MASONRY OR SPRAY ON FIREPROOFING, OR ARE ENCASED BY BUILDING FINISH, SHALL BE LEFT UNPAINTED.

6. ALL WELDING IS TO BE DONE BY CERTIFIED WELDERS USING FILLER METALS TO MATCH MATERIAL STRENGTH (UNO). ALL WELDS SHALL BE IN CONFORMITY WITH THE PROJECT SPECIFICATIONS AND THE CODE FOR WELDING IN BUILDING CONSTRUCTION (AWS D1.1 LATEST REVISION) OF THE AMERICAN WELDING SOCIETY. SEE SPECIAL INSPECTIONS SECTION FOR WELDING INSPECTION REQUIREMENTS. USE OF E70T-4 WIRE IS NOT PERMITTED.

7. WHERE FABRICATION OF STRUCTURAL LOAD-BEARING OR LATERAL LOAD-RESISTING MEMBERS OR ASSEMBLIES IS BEING CONDUCTED ON THE PREMISES OF FABRICATOR'S SHOP, SPECIAL INSPECTION OF THE FABRICATED ITEMS SHALL BE PERFORMED DURING FABRICATION, EXCEPT WHERE THE FABRICATOR HAS BEEN APPROVED TO PERFORM WORK WITHOUT SPECIAL INSPECTIONS IN ACCORDANCE WITH SECTION 1704.2.5.1 OF THE CODE.

8. WELD LENGTHS CALLED FOR ON PLANS ARE THE NET EFFECTIVE LENGTH REQUIRED. WHERE FILLET WELD SYMBOL IS GIVEN WITHOUT INDICATION OF SIZE, USE MINIMUM SIZE WELDS AS SPECIFIED IN AISC 360-16 SECTION J2.2b.

9. ALL EXPOSED STRUCTURAL STEEL AND MISCELLANEOUS METAL SHALL BE HOT DIP GALVANIZED AFTER FABRICATION UNO.

10. THE SPECIAL INSPECTIONS FOR STEEL ELEMENTS OF BUILDINGS AND STRUCTURES SHALL BE AS REQUIRED BY SECTION 1705.2 OF THE CODE AND CONSTRUCTION DOCUMENTS.

    EXCEPTIONS:
    SPECIAL INSPECTIONS OF THE STEEL FABRICATION PROCESS SHALL NOT BE REQUIRED WHERE THE FABRICATION PROCESS FOR THE ENTIRE BUILDING OR STRUCTURE DOES NOT INCLUDE ANY WELDING, THERMAL CUTTING OR HEATING OPERATION OF ANY KIND. IN SUCH CASES, THE FABRICATOR SHALL BE REQUIRED TO SUBMIT A DETAILED PROCEDURE FOR MATERIAL CONTROL THAT DEMONSTRATES THE FABRICATOR'S ABILITY TO MAINTAIN SUITABLE RECORDS AND PROCEDURES SUCH THAT, AT ANY TIME DURING THE FABRICATION PROCESS, THE MATERIAL SPECIFICATION AND GRADE FOR THE MAIN STRESS-CARRYING ELEMENTS ARE CAPABLE OF BEING DETERMINED. MILL TEST REPORTS SHALL BE IDENTIFIABLE TO THE MAIN STRESS-CARRYING ELEMENTS WHERE REQUIRED BY THE APPROVED CONSTRUCTION DOCUMENTS.

11. ALL SPLICES IN HEAVY SHAPES SHALL COMPLY WITH AISC 360-16 SECTION J1.5.

12. WELD ACCESS HOLES SHALL COMPLY WITH AISC 360-16 SECTION J1.6.

13. ALL WELD MATERIAL SHALL COMPLY WITH AISC 360-16 SECTION J2.6.

14. THE THERMAL CUTTING OF ALL MEMBERS SHALL COMPLY WITH AISC 360-16 SECTION M2.2.

15. NON-DESTRUCTIVE ULTRASONIC TESTING SHALL BE REQUIRED ON 100% OF CJP GROOVE WELDS IN MATERIAL 5/16" THICK AND GREATER.

16. COORDINATE STRUCTURAL STEEL REQUIRED FOR ELEVATOR INSTALLATION AND OPERATION IN ADDITION TO WHAT IS SHOWN ON DRAWINGS WITH ELEVATOR MANUFACTURER.

LIGHT GAUGE METAL FRAMING

1. ALL LIGHT GAGE METAL FRAMING SHALL BE AS NOTED BELOW:

   EXTERIOR STUDS: GALVANIZED
   INTERIOR STUDS: GALVANIZED OR FINISHED WITH MANUFACTURER'S STANDARD RUST INHIBITIVE PAINT.

2. ALL LIGHT GAGE METAL FRAMING CONSTRUCTION SHALL BE IN ACCORDANCE WITH AISI "SPECIFICATIONS FOR DESIGN OF COLD FORMED STEEL STRUCTURAL MEMBERS."

3. ALL LIGHT GAGE METAL FRAMING SHALL CONFORM TO ASTM C955, ASTM C1007, AND THE FOLLOWING:

   GALVANIZED AND PAINTED STUDS, TRACKS, END CLOSURES, BRIDGING AND ACCESSORIES
   12, 14 OR 16 GAUGE — Fy = 50,000 psi

   GALVANIZED AND PAINTED STUDS, TRACKS, END CLOSURES, BRIDGING AND ACCESSORIES
   18 OR 20 GAUGE — Fy = 33,000 psi

4. UNLESS NOTED OTHERWISE, ALL INTERIOR AND EXTERIOR METAL STUD WALLS SHALL HAVE MAXTRAK 2D (SLT/H) IAPMO #0145 OR SLIP TRACK SLOTTED TRACK WITH 3/4"± OF ALLOWABLE DEFLECTION. TOP TRACK OF SLIP TRACKS SHALL HAVE 2 1/2" LEGS. SLIP TRACK SHALL HAVE SAME GAUGE AS STUD.

5. UNLESS NOTED OTHERWISE, ALL INTERIOR PARTITIONS THAT DO NOT SUPPORT CASEWORK OR SHELVING SHALL BE 4", 6" x 20 GA (33 MILS) OR 8" x 18 GA (43 MILS) STUDS, BOTTOM TRACKS TO MATCH STUD GAGE, AND 16 GA (54 MILS) TOP TRACK OF SLIP TRACKS. BOTTOM TRACKS SHALL HAVE 1 1/4" FLANGES. SEE ARCHITECTURAL DRAWINGS FOR STUD SIZES AT EACH WALL.

6. UNLESS NOTED OTHERWISE, ALL INTERIOR PARTITIONS SUPPORTING FRAMING CASEWORK OR SHELVING SHALL BE 6" OR 8" x 16GA (54 MILS) STUDS, BOTTOM TRACKS TO MATCH STUD GAGE, AND 14 GA (68 MILS) TOP TRACK OF SLIP TRACKS. BOTTOM TRACKS SHALL HAVE 1 1/4" FLANGES. SEE ARCHITECTURAL DRAWINGS FOR STUD SIZES AT EACH WALL.

7. UNLESS NOTED OTHERWISE, ALL EXTERIOR PARTITIONS, SOFFIT FRAMING AND FURRING SHALL BE 4", 6" OR 8"x 16 GA (54 MILS) STUDS, JOISTS, BOTTOM TRACKS TO MATCH STUD GAGE, AND 14 GA (68 MILS) TOP TRACK OF SLIP TRACKS. BOTTOM TRACKS SHALL HAVE 1 1/2" FLANGES. SEE ARCHITECTURAL DRAWINGS FOR STUD SIZES AT EACH WALL.

8. ALL METAL STUDS SHALL HAVE STIFFENED FLANGES, SEE DRAWINGS FOR DETAILS ON CONNECTIONS, BRACING, BRIDGING, ETC. (SEE MANUFACTURERS SPECIFICATIONS AND RECOMMENDATIONS.)

9. ALL FRAMING MEMBERS TO BE CUT SQUARELY TO ENSURE TIGHT-FIT CONNECTIONS.

10. ALL STUD WALL TRACK SHALL BE FABRICATED TO ALLOW FOR FULL STUD BEARING ON THE TRACK WEB. TRACK SCREWS SHALL NOT TRANSFER BEARING LOADS.

11. STUDS IN BEARING WALLS SHALL ALIGN VERTICALLY BETWEEN FLOORS. WALL TRACK IS NOT PERMITTED TO CARRY FLEXURAL LOADS

12. HOLES IN STUDS OTHER THAN THOSE PROVIDED BY THE MANUFACTURER ARE PROHIBITED.

13. CUTTING FLANGES AND STIFFENER LIPS IN LOAD BEARING STUDS IS PROHIBITED.

14. ALL SHEET METAL SCREWS SHALL PROTRUDE 1/4" (NOT LESS THAN 3 EXPOSED THREADS) THROUGH METAL FRAMING WITH MINIMUM STEEL PROPERTIES BASED ON SSMA PRODUCT TECHNICAL GUIDE ICC ESR-3064P. SCREWS SHOULD BE INSTALLED AND TIGHTENED IN ACCORDANCE WITH SCREW MANUFACTURERS RECOMMENDATIONS.

15. MINIMUM STUD PROPERTIES SHALL BE TAKEN FROM THE SSMA PRODUCT TECHNICAL GUIDE ICC ESR-3064P.

CONCRETE

1. ALL CONCRETE CONSTRUCTION SHALL CONFORM WITH CHAPTER 19 OF THE CODE AND WITH THE PROVISIONS OF ACI 318, LATEST EDITION.

2. REINFORCED CONCRETE IS DESIGNED BY THE "ULTIMATE STRENGTH DESIGN METHOD".

3. CONCRETE MIXES SHALL BE DESIGNED BY THE APPROVED TESTING LABORATORY AND APPROVED BY THE STRUCTURAL ENGINEER. THE COMPRESSIVE STRENGTH OF THE CONCRETE SHALL BE PROPORTIONED BASED ON CHAPTER 19 OF THE CODE.

4. SCHEDULE OF STRUCTURAL CONCRETE 28-DAY STRENGTH AND TYPES:

LOCATION	EXPOSURE CLASSES				MIN STRENGTH f'c (PSI)	MAX WATER/ CEMENT RATIO	CEMENT TYPE (ASTM C150)	DENSITY
	F	S	W	C				
ALL CONCRETE FOOTINGS, TIE BEAMS, GRADE BEAMS**	F0	S1	W0	C0	4000 PSI	0.50	II/V	150 PCF
SLAB ON GRADE**	F0	S1	W0	C0	4000 PSI	0.45	II/V	150 PCF
LTWT CONC FILL ON METAL DECK	F0	S0	W0	C0	3000 PSI	0.55	II	115 PCF

**PER GEOTECHNICAL REPORT, PROVIDE CONCRETE EXPOSURE OF W1 AND C2 FOR CONCRETE STRUCTURES EXPOSED TO SEAWATER.

5. AGGREGATE FOR HARDROCK CONCRETE SHALL CONFORM TO ALL REQUIREMENTS AND TESTS OF ASTM C33 AND PROJECT SPECIFICATIONS. EXCEPTIONS MAY BE USED ONLY WITH PERMISSION OF THE STRUCTURAL ENGINEER.

6. AGGREGATE FOR LIGHT WEIGHT (115 PCF) CONCRETE SHALL BE EXPANDED SHALE CONFORMING TO ASTM C330 AND PROJECT SPECIFICATIONS. EXCEPTIONS MAY BE USED ONLY WITH PERMISSION OF THE STRUCTURAL ENGINEER.

7. CONCRETE MIXING OPERATION, ETC. SHALL CONFORM TO ASTM C94.

8. PLACEMENT OF CONCRETE SHALL CONFORM TO THE CODE AND PROJECT SPECIFICATIONS. CLEAN AND ROUGHEN TO 1/4" AMPLITUDE ALL CONCRETE SURFACES AGAINST WHICH NEW CONCRETE IS TO BE PLACED.

9. ALL REINFORCING BARS, ANCHOR BOLTS AND OTHER CONCRETE INSERTS SHALL BE WELL SECURED IN POSITION PRIOR TO PLACING CONCRETE.

10. PROVIDE SLEEVES FOR PLUMBING AND ELECTRICAL OPENINGS IN CONCRETE BEFORE PLACING. DO NOT CUT ANY REINFORCING WHICH MAY CONFLICT. CORING IN CONCRETE IS NOT PERMITTED. NOTIFY THE STRUCTURAL ENGINEER IN ADVANCE OF CONDITIONS NOT SHOWN ON THE DRAWINGS. SEE THESE DRAWINGS FOR ADDITIONAL RESTRICTIONS ON THE PLACEMENT OF OPENINGS IN SLABS AND WALLS.

11. PIPES LARGER THAN 1-1/2" DIAMETER SHALL NOT BE EMBEDDED IN STRUCTURAL CONCRETE EXCEPT WHERE SPECIFICALLY APPROVED BY STRUCTURAL ENGINEER. PIPES SHALL NOT DISPLACE OR INTERRUPT REINFORCING BARS, SPACE EMBEDDED PIPES AND SLEEVES AT A MINIMUM OF 3 DIAMETERS ON CENTER.

12. CONCRETE FILL OVER METAL DECK SHALL BE SCREEDED TO A CONSTANT THICKNESS AS SPECIFIED IN THE DECKING SCHEDULE.

CONSTRUCTION JOINTS

1. ALL CONSTRUCTION JOINTS SHALL BE CONSTRUCTED IN ACCORDANCE WITH CHAPTER 19 OF THE CODE AND THE TYPICAL CONSTRUCTION JOINT DETAILS SHOWN ON THE STRUCTURAL DRAWINGS.

2. ALL SURFACES OF CONSTRUCTION JOINTS SHALL BE CLEANED TO REMOVE DUST, CHIPS, OR OTHER FOREIGN MATTER PRIOR TO PLACING THE ADJACENT CONCRETE.

3. CONSTRUCTION JOINTS IN FLOORS SHALL BE LOCATED WITHIN THE MIDDLE THIRD OF SLAB, BEAM & GIRDER SPANS. JOINTS IN GIRDERS SHALL BE OFFSET A MINIMUM OF TWO TIMES THE WIDTH OF THE INTERSECTING BEAM FROM THE FACE OF THE INTERSECTING BEAM.

4. THE CONTRACTOR SHALL SUBMIT THE PROPOSED LOCATIONS OF CONSTRUCTION JOINTS FOR APPROVAL BY THE STRUCTURAL ENGINEER BEFORE STARTING CONSTRUCTION.

NON-SHRINK GROUT

1. NON-SHRINK GROUT SHALL HAVE A MINIMUM STRENGTH OF 7,000 PSI. ACCEPTABLE GROUTS INCLUDE:
   A. EUCLID CHEMICAL COMPANY: EUCO-NS
   B. L&M: CRYSTEX
   C. MASTER BUILDERS: MASTERFLOW713
   D. FIVE STAR GROUT
2. WHERE HIGH FLUIDITY OR INCREASED PLACING TIME IS REQUIRED, ACCEPTABLE GROUTS INCLUDES:
   A. EUCLID CHEMICAL COMPANY : EUCO HI-FLOW GROUT
   B. MASTER BUILDERS: MASTERFLOW928.

STEEL DECK

1. ROOF AND FLOOR DECKS SHALL BE AS NOTED ON THE DRAWINGS. MINIMUM PROPERTIES SHALL BE TAKEN FROM ACCEPTABLE MANUFACTURER PRODUCT CATALOG OR APPROVED EQUAL.

2. DECK SHOP DRAWINGS SHALL BE SUBMITTED TO THE ENGINEER FOR APPROVAL PRIOR TO FABRICATION AND SHALL INDICATE HEADED STUD LAYOUT.

3. THE AMERICAN IRON AND STEEL INSTITUTE "SPECIFICATIONS FOR THE DESIGN OF LIGHT GAUGE STEEL STRUCTURAL MEMBERS" SHALL GOVERN THE DESIGN OF ALL DECK UNITS. STEEL DECK AND ALL OF ITS CLOSURES AND FLASHINGS SHALL CONFORM TO ASTM A653 OR A1063, GRADE 50, FY 50,000 PSI MIN.

4. ACCEPTABLE STEEL DECK MANUFACTURERS ARE AS FOLLOWS:
   VERCO MANUFACTURING, INC. (IAPMO ER-0217)
   ASC STEEL DECK (IAPMO ER-0161, ER-0329, LARR #25876, 25762)

5. UNITS SHALL BE CONTINUOUS OVER THREE OR MORE SPANS, EXCEPT WHERE THE FRAMING DOES NOT PERMIT. SHORING MAY BE REQUIRED AT NON-CONTINUOUS SPANS. DECK SHOP DRAWINGS SHALL INDICATE WHERE SHORING WILL BE REQUIRED. DECK SHALL BEAR 2" MINIMUM AT ALL SUPPORTS.

6. ALL WELDING OF STEEL DECK SHALL BE DONE BY CERTIFIED LIGHT GAGE WELDERS IN ACCORDANCE WITH AWS D1.3 (LATEST EDITION) "STRUCTURAL WELDING CODE-SHEET STEEL".

7. UNITS SHALL BE FASTENED TO THE STEEL SUPPORTS AT THE END OF THE UNITS AND AT INTERMEDIATE SUPPORTS AND TO THE STEEL SUPPORTS AT THE SIDE BOUNDARIES BY 3/4" DIAMETER PUDDLE WELDS AT 1'-0" OC SHEAR STUDS WELDED THROUGH DECK MAY BE USED IN PLACE OF 3/4" DIAMETER PUDDLE WELDS.

8. THE SIDE LAPS OF ADJACENT UNITS SHALL BE FASTENED BETWEEN SUPPORTS BY BUTTON PUNCHING AT 3'-0" OC MAX UNO. CONTRACTOR MAY DECREASE SPACING OF SIDE LAP ATTACHMENTS TO ACCOMMODATE CONSTRUCTION LOADING AS REQUIRED.

9. PROVIDE FLASHING AND CLOSURE PLATES AT ENDS OF ALL UNITS, AROUND COLUMNS, AND AT ALL PERIMETER LOCATIONS REQUIRING CONCRETE.

HEADED STUDS

1. ALL HEADED STUDS WELDED TO BEAMS OR CONCRETE CONNECTIONS SHALL BE "TRUE-WELD STUDS", DIVISION OF TRU-FIT SCREW CORPORATION, CLEVELAND, OHIO OR "NELSON STUD", TRW FASTENERS AND ASSEMBLIES GROUP, LORAIN, OHIO, OR APPROVED EQUAL.

2. ALL HEADED STUDS SHALL BE AUTOMATICALLY END WELDED IN SHOP OR FIELD WITH EQUIPMENT RECOMMENDED BY MANUFACTURER OF STUDS.

3. STEEL SHEAR STUDS MATERIAL, WELDING AND INSPECTION SHALL BE IN ACCORDANCE WITH AWS "STRUCTURAL WELDING CODE", AWS D1.1-(LATEST EDITION) SECTION 7. ALL STUDS SHALL BE 3/4" DIAMETER X 5" LONG, SPACED AT 12" O.C. MAXIMUM, UNLESS NOTED OTHERWISE

FOUNDATION

1. FOUNDATION DESIGN BASED ON SOIL REPORT BY GMU GEOTECHNICAL, INC., TITLED 'GEOTECHNICAL INVESTIGATION REPORT, VOLUMES 1, 2, AND 3, DANA POINT HARBOR REVITALIZATION: BUILDINGS 1 THROUGH 12 – COMMERCIAL COMPONENT, CITY OF DANA POINT, CALIFORNIA,' REPORT NO. 17-206-02, DATED MAY 27, 2021 (REFER TO GEOTECHNICAL DTL FOR REF ONLY ON G0.0.1).

2. FOOTINGS ARE DESIGNED BASED ON THE FOLLOWING INFORMATION:

   W = FOOTING WIDTH

   D = FOOTING DEPTH BELOW ADJACENT GRADE

   ALLOWABLE BEARING *

   WALL FTGS = 5,000 PSF (MAX)

   ISOLATED FTGS = 5,000 PSF (MAX)

   PASSIVE EARTH PRESSURE **

   PASSIVE EARTH PRESSURE = 300 PCF (EFP), 3,000 PSF (MAX) (DISREGUARD UPPER 6'-0")

   COEFFICIENT OF FRICTION = 0.35

   FOOTINGS SHALL BEAR ON DEEP SOIL MIXED (DSM) COLUMNS OR LOAD TRANSFER PLATFORM (LTP) AS NOTED ON G0.0.1. MINIMUM DEPTH OF FOOTINGS BELOW LOWEST ADJACENT FINAL GRADE SHALL BE 2'-0". MINIMUM WIDTH OF FOOTING SHALL BE 2'-0".

   * - VALUES MAY BE INCREASED BY 1/3 FOR SHORT TERM LOADING.

   ** - VALUES MAY BE COMBINED WITHOUT REDUCTION AND INCREASED BY 1/3 FOR SHORT TERM LOADING.

3. CONTRACTOR TO PROVIDE FOR DE-WATERING OF EXCAVATIONS FROM EITHER SURFACE WATER, GROUND WATER OR SEEPAGE, IF REQUIRED.

4. CONTRACTOR SHALL PROVIDE FOR DESIGN AND INSTALLATION OF ALL CRIBBING, SHEATHING AND SHORING REQUIRED AND SHALL BE SOLELY RESPONSIBLE FOR ALL EXCAVATION PROCEDURES INCLUDING LAGGING, SHORING AND PROTECTION OF ADJACENT PROPERTY, STRUCTURES, STREETS AND UTILITIES IN ACCORDANCE WITH ALL NATIONAL, STATE AND LOCAL SAFETY ORDINANCES.

5. EXCAVATION FOR FOOTINGS SHALL BE APPROVED BY THE SOILS ENGINEER (GMU) AND COUNTY INSPECTOR, IF REQUIRED, PRIOR TO PLACING THE CONCRETE AND REINFORCING. CONTRACTOR TO NOTIFY THE INSPECTOR WHEN INSPECTION OF EXCAVATION IS READY. INSPECTOR TO SUBMIT LETTER OF COMPLIANCE.

6. ALL EXCAVATIONS SHALL BE PROPERLY BACKFILLED. DO NOT PLACE BACKFILL BEHIND RETAINING WALLS BEFORE CONCRETE OR GROUT HAS ATTAINED FULL DESIGN STRENGTH. CONTRACTOR SHALL BRACE OR PROTECT ALL BUILDING AND PIT WALLS BELOW GRADE FROM LATERAL LOADS UNTIL ATTACHING FLOORS ARE COMPLETELY IN PLACE AND HAVE ATTAINED FULL STRENGTH. CONTRACTOR SHALL PROVIDE FOR DESIGN, PERMITS, AND INSTALLATION OF SUCH BRACING.

7. FOUNDATIONS SHALL BE PLACED AND MEASURED ACCORDING TO DEPTHS SHOWN ON DRAWINGS. SHOULD SOIL ENCOUNTERED AT THESE DEPTHS NOT BE APPROVED BY THE SOILS ENGINEER (GMU), FOUNDATION ELEVATIONS WILL BE ALTERED BY CHANGE ORDER.

8. FOOTING BACKFILL AND UTILITY TRENCH BACKFILL WITHIN BUILDING AREA SHALL BE MECHANICALLY COMPACTED IN LAYERS IN ACCORDANCE WITH THE SOILS REPORT AND APPROVED BY THE SOILS ENGINEER. FLOODING WILL NOT BE PERMITTED. ALL FILLS USED TO SUPPORT FOUNDATIONS SHALL BE INSPECTED BY THE SOILS ENGINEER REPRESENTATIVE PER CODE SECTION 1705.6 AND TABLE 1705.6

9. ALL ABANDONED FOOTINGS, UTILITIES, ETC., SHALL BE REMOVED UNLESS NOTED OTHERWISE. NEW FOOTINGS MUST EXTEND INTO UNDISTURBED SOILS.

10. SLABS ON GRADE SHALL BE SUPPORTED ON THE INSTALLED LOAD TRANSFER PLATFORM (LTP) APPROVED BY THE SOILS ENGINEER (GMU) PRIOR TO THE PLACEMENT OF THE VAPOR BARRIER, AS NOTED ON G0.0.1.

REINFORCING STEEL (FOR CONCRETE AND MASONRY)

1. REINFORCING BARS SHALL CONFORM TO THE REQUIREMENTS OF CHAPTER 19 & 21 OF THE CODE, ASTM A615, GRADE 60 UNO.

2. BARS SHALL BE CLEAN OF RUST, GREASE, OR OTHER MATERIALS LIKELY TO IMPAIR BOND. ALL REINFORCING BAR BENDS SHALL BE MADE COLD.

3. WELDED WIRE FABRIC SHALL CONFORM TO ASTM A185. WWF SHALL BE SUPPORTED ON APPROVED CHAIRS.

4. REINFORCING BAR SPLICES SHALL BE MADE AS INDICATED ON THE DRAWINGS. LAP ALL HORIZONTAL BARS AT CORNERS AND INTERSECTIONS. STAGGER ALL SPLICES UNLESS NOTED OTHERWISE ON PLANS.

5. ALL BARS SHALL BE MARKED SO THEIR IDENTIFICATION CAN BE MADE WHEN THE FINAL IN-PLACE INSPECTION IS MADE.

6. WHERE WELDING OF REINFORCING IS APPROVED BY THE STRUCTURAL ENGINEER, IT SHALL BE DONE BY AWS CERTIFIED WELDERS USING FILLER MATERIAL TO MATCH MATERIAL STRENGTHS. WELDING PROCEDURES SHALL CONFORM TO THE REQUIREMENTS OF STRUCTURAL WELDING CODE-REINFORCING STEEL", AWS-D1.4, LATEST REVISION. REINFORCING BARS TO BE WELDED SHALL CONFORM TO THE REQUIREMENTS OF ASTM A706.

7. BARS IN SLABS SHALL BE SECURELY SUPPORTED ON WELL-CURED CONCRETE BLOCKS OR APPROVED METAL CHAIRS, PRIOR TO PLACING CONCRETE.

8. REINFORCING STEEL SHALL BE DETAILED IN ACCORDANCE WITH THE "A.C.I. MANUAL OF STANDARD PRACTICE FOR DETAILING REINFORCED CONCRETE STRUCTURES", LATEST EDITION.

9. COMPLETE AND DETAILED REINFORCING PLACEMENT DRAWINGS SHALL BE PREPARED AND SUBMITTED TO THE ARCHITECT FOR APPROVAL BY THE STRUCTURAL ENGINEER PRIOR TO FABRICATION IN ACCORDANCE WITH THE SPECIFICATIONS AND APPLICABLE CODES. THESE DRAWINGS SHALL BE AVAILABLE ON THE JOB SITE PRIOR TO PLACING OF CONCRETE.

10. MILL TEST REPORTS FOR GRADE 60 BARS SHALL BE SUBMITTED PRIOR TO PLACEMENT OF CONCRETE.

11. PROVIDE INSPECTION OF CONCRETE PER SPECIAL INSPECTION NOTES SECTION. INSPECTION SHALL BE SCHEDULED SO THAT PLACEMENT OF REINFORCING STEEL, CONDUIT, SLEEVES, AND EMBEDDED ITEMS MAY BE CORRECTED PRIOR TO PLACEMENT OF OVERLYING GRIDS OR REINFORCING STEEL.

12. ALL GRADE 60 REINFORCING STEEL SHALL BE CLEARLY MARKED TO DIFFERENTIATE THEM FROM GRADE 40 REINFORCING STEEL IF CONCURRENTLY ON SITE.

13. CONCRETE PROTECTION FOR REINFORCEMENT:

CAST-IN-PLACE NONPRESTRESSED CONCRETE MEMBERS

CONCRETE EXPOSURE	MEMBER	REINFORCEMENT	MIN COVER, IN.
CAST AGAINST AND PERMANENTLY IN CONTACT WITH GROUND	ALL	ALL	3
EXPOSED TO WEATHER OR IN CONTACT WITH GROUND	ALL	No. 6 THROUGH No. 18 BARS	2
		No. 5 BAR, W31 OR D31 WIRE, AND SMALLER	1-1/2
NOT EXPOSED TO WEATHER OR IN CONTACT WITH GROUND	SLABS, JOISTS AND WALLS	No. 14 AND No. 18 BARS	1-1/2
		No. 11 BAR AND SMALLER	3/4
	BEAMS, COLUMNS, PEDESTALS, AND TENSION TIES	PRIMARY REINFORCEMENT, STIRRUPS, TIES, SPIRALS, AND HOOPS	1-1/2

DESIGN CRITERIA

1. ALL WORK SHALL CONFORM TO THE MINIMUM STANDARDS OF THE FOLLOWING CODES:

   2019 CALIFORNIA BUILDING CODE AND LATEST REVISIONS REFERRED TO HERE AS "THE CODE", AND ANY OTHER REGULATING AGENCIES WHICH HAVE AUTHORITY OVER ANY PORTION OF THE WORK, INCLUDING THE STATE OF CALIFORNIA DIVISION OF INDUSTRIAL SAFETY, AND THOSE CODES & STANDARDS LISTED IN THESE NOTES AND SPECIFICATIONS.

2. DESIGN LOADS:

   LIVE LOADS:
   ROOF 20 PSF REDUCIBLE
   TYPICAL FLOORS, INCLUDED PARTITIONS 100 PSF NON-REDUCIBLE
   FLOOR BALCONIES 100 PSF NON-REDUCIBLE

3. WIND ANALYSIS PER CHAPTER 16 OF THE CODE

   RISK CATEGORY = III
   BASIC WIND SPEED = 102 mph
   WIND EXPOSURE = D

4. SEISMIC ANALYSIS PER CHAPTER 16 OF THE CODE UTILIZING THE FOLLOWING PROCEDURE:
   - THE EQUIVALENT LATERAL FORCE ANALYSIS

   RISK CATEGORY = III
   IMPORTANCE FACTOR = 1.25
   REDUNDANCY FACTOR, ρ = 1.3
   $

COLD-FORMED STEEL DECK (CBC 1705.2.2, ANSI/SDI QA/QC)

INSPECTION OR EXECUTION TASKS PRIOR TO DECK PLACEMENT (TABLE 1.1)	QC	QA
VERIFY COMPLIANCE OF MATERIALS (DECK AND ALL DECK ACCESSORIES) WITH CONCTRUCTION DOCUMENTS, INCLUDING PROFILES, MATERIAL PROPERTIES, AND BASE METAL THICKNESS	P	P
DOCUMENT ACCEPTANCE OR REJECTION OF DECK AND DECK ACCESSORIES	P	P
INSPECTION OR EXECUTION TASKS AFTER DECK PLACEMENT (TABLE 1.2)		
VERIFY COMPLIANCE OF DECK AND ALL DECK ACCESSORIES INSTALLATION WITH CONSTRUCTION DOCUMENTS	P	P
VERIFY DECK MATERIALS ARE REPRESENTED BY MILL CERTIFICATIONS THAT COMPLY WITH THE CONSTRUCTION DOCUMENTS	N/A	P
DOCUMENT ACCEPTANCE OR REJECTION OF INSTALLATION OF DECK AND DECK ACCESSORIES	P	P
INSPECTION OR EXECUTION TASKS PRIOR TO WELDING (TABLE 1.3)		
WELDING PROCEDURE SPECIFICATIONS (WPS) AVAILABLE	O	O
MANUFACTURER CERTIFICATIONS FOR WELDING CONSUMABLES AVAILABLE	O	O
MATERIALS IDENTIFICATION (TYPE/GRADE)	O	O
CHECK WELDING EQUIPMENT	O	O
INSPECTION OR EXECUTION TASKS DURING WELDING (TABLE 1.4)		
USE OF QUALIFIED WELDERS	O	O
CONTROL AND HANDLING OF WELDING CONSUMABLES	O	O
ENVIRONMENTAL CONDITIONS (WIND SPEED, MOISTURE, TEMPERATURE)	O	O
WPS FOLLOWED	O	O
INSPECTION OR EXECUTION TASKS AFTER WELDING (TABLE 1.5)		
VERIFY SIZE AND LOCATION OF WELDS, INCLUDING SUPPORT, SIDELAP, AND PERIMETER WELDS	P	P
WELDS MEET VISUAL ACCEPTANCE CRITERIA	P	P
VERIFY REPAIR ACTIVITIES	P	P
DOCUMENT ACCEPTANCE OR REJECTION OF WELDS	P	P
INSPECTION OR EXECUTION TASKS PRIOR TO MECHANICAL FASTENING (TABLE 1.6)		
MANUFACTURER INSTALLATION INSTRUCTIONS AVAILABLE FOR MECHANICAL FASTENERS	O	O
PROPER TOOLS AVAILABLE FOR FASTENER INSTALLATION	O	O
PROPER STORAGE FOR MECHANICAL FASTENERS	O	O
INSPECTION OR EXECUTION TASKS DURING MECHANICAL FASTENING (TABLE 1.7)		
FASTENERS ARE POSITIONED AS REQUIRED	O	O
FASTENERS ARE INSTALLED IN ACCORDANCE WITH MANUFACTURER'S INSTRUCTIONS	O	O
INSPECTION OR EXECUTION TASKS AFTER MECHANICAL FASTENING (TABLE 1.8)		
CHECK SPACING, TYPE, AND INSTALLATION OF SUPPORT FASTENERS	P	P
CHECK SPACING, TYPE, AND INSTALLATION OF SIDELAP FASTENERS	P	P
CHECK SPACING, TYPE, AND INSTALLATION OF PERIMETER FASTENERS	P	P
VERIFY REPAIR ACTIVITIES	P	P
DOCUMENT ACCEPTANCE OR REJECTION OF MECHANICAL FASTENERS	P	P

O- OBSERVE SHALL MEAN TO INSPECT THESE ITEMS ON AN INTERMITTENT BASIS. OPERATIONS NEED NOT BE DELAYED PENDING THESE INSPECTIONS. FREQUENCY OF OBSERVATIONS SHALL BE ADEQUATE TO CONFIRM THAT THE WORK HAS BEEN PERFORMED IN ACCORDANCE WITH THE APPLICABLE DOCUMENTS. IN THE EVENT THAT OBSERVATIONS DETERMINE THAT THE MATERIALS AND/OR WORKMANSHIP ARE NOT IN CONFORMANCE WITH THE APPLICABLE DOCUMENTS, ADDITIONAL INSPECTIONS SHALL BE PERFORMED TO DETERMINE THE EXTENT OF NON-CONFORMANCE.

P- PERFORM SHALL MEAN TO PERFORM THESE TASKS PRIOR TO FINAL ACCEPTANCE FOR EACH ITEM OR ELEMENT.

WITHIN THE LISTED TASKS, "DOCUMENT" SHALL MEAN THE INSPECTOR SHALL PREPARE REPORTS OR OTHER APPROPRIATE WRITTEN DOCUMENTATION INDICATING THAT THE WORK HAS OR HAS NOT BEEN PERFORMED IN ACCORDANCE WITH THE CONSTRUCTION DOCUMENTS.

NON-STRUCTURAL COMPONENTS

INSPECTION TASK	FREQUENCY OF INSPECTION	
	CONTINUOUS	PERIODIC
1. ARCHITECTURAL COMPONENTS: ERECTION & FASTENING OF THE FOLLOWING: (CODE SECTION 1705.12.5)(1 & 5)		X
a. EXTERIOR CLADDING (2)		X
b. INTERIOR & EXTERIOR NON BEARING WALLS (3)		X
c. INTERIOR & EXTERIOR VENEER (2)		X
2. ANCHORAGE OF ACCESS FLOORS. (CODE SECTION 1705.12.5.1)(5)		X
3. PLUMBING, MECHANICAL AND ELECTRICAL COMPONENTS: (CODE SECTION 1705.12.6)		X
a. ANCHORAGE OF ELECTRICAL EQUIPMENT FOR EMERGENCY AND STANDBY POWER SYSTEMS.(4)		X
b. ANCHORAGE OF ALL ELECTRICAL EQUIPMENT.(6)		X
c. INSTALLATION AND ANCHORAGE OF PIPING SYSTEMS DESIGNED TO CARRY HAZARDOUS MATERIALS AND THEIR ASSOCIATED MECHANICAL UNITS.(4)		X
d. INSTALLATION AND ANCHORAGE OF DUCTWORK DESIGNED TO CARRY HAZARDOUS MATERIALS. (4)		X
e. INSTALLATION AND ANCHORAGE OF VIBRATION ISOLATION SYSTEMS WHERE THE APPROVED CONSTRUCTION DOCUMENTS REQUIRE A NOMINAL CLEARANCE OF 0.25 INCHES OR LESS BETWEEN THE EQUIPMENT SUPPORT FRAME AND RESTRAINT.(4)		X
f. INSTALLATION OF MECHANICAL AND ELECTRICAL EQUIPMENT, INCLUDING DUCT WORK, PIPING SYSTEMS AND THEIR STRUCTURAL SUPPORTS, WHERE AUTOMATIC FIRE SPRINKLER SYSTEMS ARE INSTALLED (4) VERIFY 1) CLEARANCES HAVE BEEN PROVIDED PER ASCE/SEI 7 SECTION 13.2.3 OR 2) A NOMINAL CLEARANCE OF NOT LESS THAN 3 INCHES HAS BEEN PROVIDED BETWEEN FIRE PROTECTION SPRINKLER SYSTEM DROPS AND SPRIGS AND: STRUCTURAL MEMBERS NOT USED COLLECTIVELY OR INDEPENDENTLY TO SUPPORT THE SPRINKLERS; EQUIPMENT ATTACHED TO THE BUILDING STRUCTURE; AND OTHER SYSTEMS' PIPING.		
4. ANCHORAGE OF STORAGE RACKS ≥ 8'-0" IN HEIGHT. (5) (CODE SECTION 1705.12.7)		X
5. DURING FABRICATION AND INSTALLATION OF ISOLATOR UNIT AND ENERGY DISSIPATION DEVICES FOR SEISMIC ISOLATION SYSTEMS IN SEISMICALLY ISOLATED STRUCTURES. (CODE SECTION 1705.12.8)		X
6. INSTALLATION OF COLD-FORMED STEEL BOLTED MOMENT FRAMES IN THE SEISMIC FORCE-RESISTING SYSTEMS.(5)		X

NOTES:
1. SPECIAL INSPECTION IS NOT REQUIRED IF ≤30 FEET IN HEIGHT ABOVE GRADE OR WALKING SURFACE.
2. SPECIAL INSPECTION IS NOT REQUIRED FOR CLADDING AND VENEER WEIGHING 5 PSF OR LESS.
3. SPECIAL INSPECTION IS NOT REQUIRED FOR INTERIOR NON BEARING WALLS WEIGHING ≤ 15 PSF.
4. FOR STRUCTURES IN SEISMIC DESIGN CATEGORY C, D, E, OR F.
5. FOR STRUCTURES IN SEISMIC DESIGN CATEGORY D, E, OR F.
6. FOR STRUCTURES IN SEISMIC DESIGN CATEGORY E OR F.

STEEL CONSTRUCTION (CBC 1705.2.1, AISC 360 CHAPTER N)

INSPECTION TASKS PRIOR TO WELDING (TABLE N5.4-1)	QC	QA
WELDER QUALIFICATION RECORDS AND CONTINUITY RECORDS	P	O
WELDING PROCEDURE SPECIFICATIONS (WPSs) AVAILABLE	P	P
MANUFACTURER CERTIFICATIONS FOR WELDING CONSUMABLES AVAILABLE	P	P
MATERIAL IDENTIFICATION (TYPE/GRADE)	O	O
WELDER IDENTIFICATION SYSTEM[(a)]	O	O
FIT-UP OF GROOVE WELDS (INCLUDING JOINT GEOMETRY) • JOINT PREPARATIONS • DIMENSIONS (ALIGNMENT, ROOT OPENING, ROOT FACE, BEVEL) • CLEANLINESS (CONDITION OF STEEL SURFACES) • TACKING (TACK WELD QUALITY AND LOCATION) • BACKING TYPE AND FIT (IF APPLICABLE)	O	O
FIT-UP OF CJP GROOVE WELDS OF HSS T-, Y- AND K-JOINTS WITHOUT BACKING (INCLUDING JOINT GEOMETRY) • JOINT PREPARATIONS • DIMENSIONS (ALIGNMENT, ROOT OPENING, ROOT FACE, BEVEL) • CLEANLINESS (CONDITION OF STEEL SURFACES) • TACKING (TACK WELD QUALITY AND LOCATION)	P	O
CONFIGURATION AND FINISH OF ACCESS HOLES	O	O
FIT-UP OF FILLET WELDS • DIMENSIONS (ALIGNMENT, GAPS AT ROOT) • CLEANLINESS (CONDITION OF STEEL SURFACES) • TACKING (TACK WELD QUALITY AND LOCATION)	O	O
CHECK WELDING EQUIPMENT	O	-
INSPECTION TASKS DURING WELDING (TABLE N5.4-2)		
CONTROL AND HANDLING OF WELDING CONSUMABLES • PACKAGING • EXPOSURE CONTROL	O	O
NO WELDING OVER CRACKED TACK WELDS	O	O
ENVIRONMENTAL CONDITIONS • WIND SPEED WITHIN LIMITS • PRECIPITATION AND TEMPERATURE	O	O
WPS FOLLOWED • SETTINGS ON WELDING EQUIPMENT • TRAVEL SPEED • SELECTED WELDING MATERIALS • SHIELDING GAS TYPE/FLOW RATE • PREHEAT APPLIED • INTERPASS TEMPERATURE MAINTAINED (MIN./MAX.) • PROPER POSITION (F, V, H, OH)	O	O
WELDING TECHNIQUES • INTERPASS AND FINAL CLEANING • EACH PASS WITHIN PROFILE LIMITATIONS • EACH PASS MEETS QUALITY REQUIREMENTS	O	O
PLACEMENT AND INSTALLATION OF STEEL HEADED STUD ANCHORS	P	P
INSPECTION TASKS AFTER WELDING (TABLE N5.4-3)		
WELDS CLEANED	O	O
SIZE, LENGTH, AND LOCATION OF WELDS	P	P
WELDS MEET VISUAL ACCEPTANCE CRITERIA • CRACK PROHIBITION • WELD/BASE METAL FUSION • CRATER CROSS SECTION • WELD PROFILES • WELD SIZE • UNDERCUT • POROSITY	P	P
ARC STRIKES	P	P
k-AREA[(b)]	P	P
WELD ACCESS HOLES IN ROLLED HEAVY SHAPES AND BUILT-UP HEAVY SHAPES[(c)]	P	P
BACKING REMOVED AND WELD TABS REMOVED (IF REQUIRED)	P	P
REPAIR ACTIVITIES	P	P
DOCUMENT ACCEPTANCE OR REJECTION OF WELDED JOINT OR MEMBER	P	P
NO PROHIBITED WELDS HAVE BEEN ADDED WITHOUT THE APPROVAL OF THE EOR	O	O
INSPECTION TASKS PRIOR TO BOLTING (TABLE N5.6-1)		
MANUFACTURER'S CERTIFICATIONS AVAILABLE FOR FASTENER MATERIALS	O	P
FASTENERS MARKED IN ACCORDANCE WITH ASTM REQUIREMENTS	O	O
CORRECT FASTENERS SELECTED FOR THE JOINT DETAIL (GRADE, TYPE, BOLT LENGTH IF THREADS ARE TO BE EXCLUDED FROM SHEAR PLANE)	O	O
CORRECT BOLTING PROCEDURE SELECTED FOR JOINT DETAIL	O	O
CONNECTING ELEMENTS, INCLUDING THE APPROPRIATE FAYING SURFACE CONDITION AND HOLE PREPARATION, IF SPECIFIED, MEET APPLICABLE REQUIREMENTS	O	O
PRE-INSTALLATION VERIFICATION TESTING BY INSTALLATION PERSONNEL OBSERVED AND DOCUMENTED FOR FASTENER ASSEMBLIES AND METHODS USED	P	O
PROTECTED STORAGE PROVIDED FOR BOLTS, NUTS, WASHERS, AND OTHER FASTENER COMPONENTS	O	O
INSPECTION TASKS DURING BOLTING (TABLE N5.6-2)		
FASTENER ASSEMBLIES PLACED IN ALL HOLES AND WASHERS AND NUTS ARE POSITIONED AS REQUIRED	O	O
JOINT BROUGHT TO THE SNUG-TIGHT CONDITION PRIOR TO THE PRETENSIONING OPERATION	O	O
FASTENER COMPONENT NOT TURNED BY THE WRENCH PREVENTED FROM ROTATING	O	O
FASTENERS ARE PRETENSIONED IN ACCORDANCE WITH THE RCSC SPECIFICATION, PROGRESSING SYSTEMATICALLY FROM MOST RIGID POINT TOWARD THE FREE EDGES	O	O
INSPECTION TASKS AFTER BOLTING (TABLE N5.6-3)		
DOCUMENT ACCEPTANCE OR REJECTION OF BOLTED CONNECTIONS	P	P

O- OBSERVE THESE ITEMS ON A RANDOM BASIS. OPERATIONS NEED NOT BE DELAYED PENDING THESE INSPECTIONS.

P- PERFORM THESE TASK FOR EACH JOINT, CONNECTION OR MEMBER.

a. THE FABRICATOR OR ERECTOR, AS APPLICABLE, SHALL MAINTAIN A SYSTEM BY WHICH A WELDER WHO HAS WELDED A JOINT OR MEMBER CAN BE IDENTIFIED. STAMPS, IF USED, SHALL BE THE LOW-STRESS TYPE.
b. WHEN WELDING DOUBLER PLATES, CONTINUITY PLATES OR STIFFENERS HAS BEEN PERFORMED IN THE K-AREA, VISUALLY INSPECT THE WEB K-AREA FOR CRACKS WITHIN 3 in OF THE WELD.
c. AFTER ROLLED HEAVY SHAPE AND BUILT-UP HEAVY SHAPES ARE WELDED, VISUALLY INSPECT THE WELD ACCESS HOLE FOR CRACKS.

3. SEE SHEET S____ FOR ADDITIONAL TESTING AND INSPECTION REQUIREMENTS FOR ELEMENTS IN THE SEISMIC FORCE RESISTING SYSTEM (SFRS).

SPECIAL INSPECTIONS

THE OWNER SHALL PROVIDE FOR A SPECIAL INSPECTOR(S) WHO WILL PROVIDE SPECIAL INSPECTIONS OF THE CONSTRUCTION AS PRESCRIBED BY THE CODE AND THE CONSTRUCTION DOCUMENTS. IN NO CASE SHALL THE REQUIREMENTS IN THE CONSTRUCTION DOCUMENTS PROVIDE FOR ANY LESS THAN THE MINIMUM REQUIREMENTS OF THE CODE OR ANY OTHER GOVERNING AUTHORITY. ANY SUCH DISCREPANCY SHALL BE BROUGHT TO THE IMMEDIATE ATTENTION OF THE ENGINEER.

THE SPECIAL INSPECTOR SHALL BE QUALIFIED BY THE COUNTY OF ORANGE TO PROVIDE INSPECTIONS OF THE SPECIFIC CONSTRUCTION OR OPERATION REQUIRED. PROOF OF SUCH QUALIFICATION SHALL BE PROVIDED TO THE ENGINEER PRIOR TO THE START OF INSPECTIONS.

THE SPECIAL INSPECTOR SHALL FURNISH INSPECTION REPORTS TO THE BUILDING OFFICIAL, THE ENGINEER, ARCHITECT AND THE CONTRACTOR IN A TIMELY MANNER. ALL DISCREPANCIES BETWEEN THE INSPECTORS WORK AND THE CONTRACT DOCUMENTS SHALL BE BROUGHT TO THE IMMEDIATE ATTENTION OF THE CONTRACTOR FOR CORRECTION, THEN, IF NOT CORRECTED, TO THE ENGINEER, ARCHITECT AND THE BUILDING OFFICIAL. THE SPECIAL INSPECTOR SHALL KEEP RECORDS SUCH THAT ALL CONCERNED PARTIES CAN IDENTIFY THE OUTSTANDING WORK THAT NEEDS CORRECTION AND SUCH THAT CORRECTED WORK IS RECORDED IN A TIMELY MANNER.

THE SPECIAL INSPECTOR SHALL SUBMIT A FINAL SIGNED REPORT STATING THAT THE WORK REQUIRING SPECIAL INSPECTION WAS, TO THE BEST OF THE INSPECTOR'S KNOWLEDGE, IN GENERAL CONFORMANCE WITH THE APPROVED PLANS AND SPECIFICATIONS AND THE APPLICABLE WORKMANSHIP PROVISIONS OF THE CODE. IF NON-CONFORMING WORK REMAINS, THEN THIS WORK SHALL BE ITEMIZED AND NOTED IN THE REPORT.

THE CONTRACTOR SHALL PROVIDE ACCESS TO THE WORK REQUIRING SPECIAL INSPECTION. THE CONTRACTOR SHALL PROVIDE A DESIGNATED AREA, ON SITE, FOR THE SPECIAL INSPECTOR TO RECEIVE CORRESPONDENCE AND AN AREA TO LEAVE CORRESPONDENCE FOR THE BUILDING OFFICIAL AND THE CONTRACTOR. THE CONTRACTOR SHALL DESIGNATE A QUALITY CONTROL INDIVIDUAL THAT SHALL ACT AS THE MAIN POINT OF CONTACT FOR THE INSPECTOR, ENGINEER AND ARCHITECT REGARDING INSPECTIONS ISSUES.

A PRE-INSPECTION MEETING SHALL BE HELD AND ORGANIZED BY THE CONTRACTOR. AS A MINIMUM, THE ENGINEER, SPECIAL INSPECTOR, ARCHITECT, BUILDING OFFICIAL'S REPRESENTATIVE AND THE CONTRACTOR'S QUALITY CONTROL INDIVIDUAL SHALL BE INVITED TO ATTEND. THE PURPOSE OF THE MEETING WILL BE TO MEET EACH OTHER, CONFIRM THE SCOPE OF WORK FOR EACH DISCIPLINE, ESTABLISH COMMUNICATION PROTOCOLS AND ANSWER ANY QUESTIONS.

ITEMS REQUIRING SPECIAL INSPECTION

SOILS (CBC TABLE 1705.6)

SPECIAL INSPECTIONS AND TESTS	CONTINUOUS	PERIODIC
1. VERIFY MATERIALS BELOW SHALLOW FOUNDATIONS ARE ADEQUATE TO ACHIEVE THE DESIGN BEARING CAPACITY.		X
2. VERIFY EXCAVATIONS ARE EXTENDED TO PROPER DEPTH AND HAVE REACHED PROPER MATERIAL.		X
3. PERFORM CLASSIFICATION AND TESTING OF COMPACTED FILL MATERIALS.		X
4. VERIFY USE OF PROPER MATERIALS, DENSITIES AND LIFT THICKNESSES DURING PLACEMENT AND COMPACTION OF COMPACTED FILL.	X	
5. PRIOR TO PLACEMENT OF COMPACTED FILL, INSPECT SUB-GRADE AND VERIFY THAT SITE HAS BEEN PREPARED PROPERLY.		X

CONCRETE CONSTRUCTION (CBC TABLE 1705.3)

SPECIAL INSPECTIONS AND TESTS	CONTINUOUS	PERIODIC
1. INSPECT REINFORCEMENT, INCLUDING PRESTRESSING TENDONS, AND VERIFY PLACEMENT.		X
2. REINFORCING BAR WELDING:		
a. VERIFY WELDABILITY OF REINFORCING BARS OTHER THAN ASTM A706;		X
b. INSPECT SINGLE-PASS FILLET WELDS, MAXIMUM 5/16"; AND		X
c. INSPECT ALL OTHER WELDS.	X	
3. INSPECT ANCHORS CAST IN CONCRETE.		X
4. INSPECT ANCHORS POST-INSTALLED IN HARDENED CONCRETE MEMBERS:		
a. ADHESIVE ANCHORS INSTALLED IN HORIZONTALLY OR UPWARDLY INCLINED ORIENTATIONS TO RESIST SUSTAINED TENDION LOADS.	X	
b. MECHANICAL ANCHORS AND ADHESIVE ANCHORS NOT DEFINED IN 4.a.		X
5. VERIFY USE OF REQUIRED DESIGN MIX.		X
6. PRIOR TO CONCRETE PLACEMENT, FABRICATE SPECIMENS FOR STRENGTH TESTS, PERFORM SLUMP AND AIR CONTENT TESTS, AND DETERMINE THE TEMPERATURE OF THE CONCRETE.	X	
7. INSPECT CONCRETE AND SHOTCRETE PLACEMENT FOR PROPER APPLICATION TECHNIQUES.	X	
8. VERIFY MAINTENANCE OF SPECIFIED CURING TEMPERATURE AND TECHNIQUES.		X
9. INSPECT PRESTRESSED CONCRETE FOR:		
a. APPLICATION OF PRESTRESSING FORCES; AND	X	
b. GROUTING OF BONDED PRESTRESSING TENDONS.	X	
10. INSPECT ERECTION OF PRECAST CONCRETE MEMBERS.		X
11. VERIFY IN-SITU CONCRETE STRENGTH, PRIOR TO STRESSING OF TENDONS IN POST-TENSIONED CONCRETE AND PRIOR TO REMOVAL OF SHORES AND FORMS FROM BEAMS AND STRUCTURAL SLABS.		X
12. INSPECT FORMWORK FOR SHAPE, LOCATION AND DIMENSIONS OF THE CONCRETE MEMBER BEING FORMED.		X

SEISMIC RAIL FORCES (ASD)

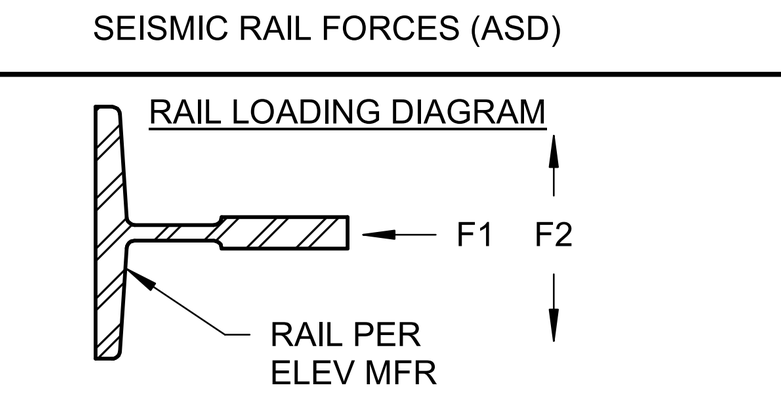

F1	F2
---#	---#

NOTES:
1. "F1" OCCURS ONLY IN THE DIRECTION SHOWN.
2. "F2" MAY OCCUR IN EITHER DIRECTION.
3. GUIDE RAILS WERE DESIGNED PER THE FORCES ABOVE. ELEVATOR MANUFACTURER TO SUBMIT SHOP DRAWINGS INCLUDING DESIGN LOADS FOR SEOR'S REVIEW AND APPROVAL. GUIDE RAIL SUPPORTS AND LAYOUTS ARE SUBJECT TO CHANGE FOLLOWING REVIEW OF SHOP DRAWINGS.

Zoning: CanningK 11/13/2024

Building&Safety: OCPWAzarvandB 12/22/2025

Permits: BNR21-0246, ELE21-0853, MEC21-0514, PLB21-0900

County of Orange - OC Public Works
OC Development Services
APPROVED
This set of plans and specifications must be kept on the job at all times. It is unlawful to make any changes or alterations to these plans without written permission from OC Public Works, OC Development Services of Orange County. The stamping of these plan specifications SHALL NOT be held to permit or be an approval of the violation of any provisions of any County Ordinance or State law.
Hadi Tabatabaee
BUILDING OFFICIAL

POWDER DRIVEN FASTENERS

1. POWDER DRIVEN FASTENERS (PDF) SHALL BE MANUFACTURED WITH STEEL CONFORMING TO AISI 1060 OR 1070 MODIFIED, AUSTEMPERED TO A ROCKWELL "C" HARDNESS OF 58±1 FOR X-U FASTENERS AND SHALL BE MANUFACTURED BY HILTI (ICC REPORT ESR-2269) OR APPROVED EQUAL.
2. THE PDF FOR ANCHORING TO CONCRETE SHALL BE 0.157" DIAMETER WITH A MINIMUM PENETRATION OF 1" INTO THE CONCRETE. MAINTAIN MINIMUM EDGE DISTANCE AND SPACING PER THE MANUFACTURER.
3. THE PDF FOR ANCHORING THROUGH METAL DECK TO LIGHTWEIGHT CONCRETE SHALL BE 0.157" DIAMETER WITH A MINIMUM PENETRATION OF 1" INTO THE CONCRETE. PDF SHALL BE INSTALLED AT THE HIGH FLUTES OF THE DECK ONLY. MAINTAIN MINIMUM EDGE DISTANCE AND SPACING PER THE MANUFACTURER.
4. THE PDF FOR ANCHORING TO STEEL SHALL BE 0.157" DIAMETER WITH PENETRATION THROUGH THE BASE METAL. FOR STEEL BASE-MATERIAL THICKNESS GREATER THAN OR EQUAL TO 3/8 INCH, FASTENER POINT PENETRATION THROUGH THE STEEL IS NOT NECESSARY, PROVIDED A MINIMUM EMBEDMENT OF 0.320 INCH IS ACHIEVED. MAINTAIN MINIMUM EDGE DISTANCE AND SPACING PER THE MANUFACTURER.

EXPANSION ANCHORS

1. ANCHOR DIAMETER REFERS TO THE ANCHOR SIZE AND NOT THE DIAMETER OF THE DRILLED HOLE.
2. ALL ANCHORS SHOULD MEET THE MINIMUM EMBEDMENT, EDGE DISTANCE, SPACING AND SLAB THICKNESS CRITERIA ESTABLISHED BY THE RELEVANT ICC-ES EVALUATION REPORT.
3. ACCEPTABLE MANUFACTURERS FOR EXPANSION BOLTS ARE AS FOLLOWS:

   CONCRETE MASONRY UNITS (CMU):
   HILTI KWIK BOLT 3 (KB3) (ICC ESR-1385).
   SIMPSON WEDGE-ALL (ICC ESR-1396).

   CONCRETE:
   HILTI KWIK BOLT TZ (KB-TZ) (ICC ESR-1917)
   SIMPSON STRONG-BOLT 2 (ICC ESR-3037)
4. DO NOT LOCATE EXPANSION ANCHORS CLOSER TO EDGE OF CONCRETE/MASONRY OR TO CONTROL/CONSTRUCTION JOINTS THAN THE MINIMUM EDGE DISTANCE SPECIFIED IN THE ICC REPORT, UNO.
5. WHEN INSTALLING DRILLED-IN ANCHORS AND/OR POWDER DRIVEN PINS IN EXISTING NON-PRESTRESSED REINFORCED CONCRETE, USE CARE AND CAUTION TO AVOID CUTTING OR DAMAGING THE EXISTING REINFORCING BARS.
6. IT IS NOT ACCEPTABLE TO SUBSTITUTE ANY CAST-IN-PLACE BOLTS/RODS/ ANCHORS FOR EXPANSION ANCHORS WITHOUT PRIOR APPROVAL FROM THE STRUCTURAL ENGINEER OF RECORD.
7. USE HOT DIP GALVANIZED OR STAINLESS STEEL ANCHORS WHEN EXPANSION ANCHORS ARE EXPOSED TO WEATHER OR IN A DAMP ENVIRONMENT.
8. SPECIAL INSPECTION SHALL BE PROVIDED PER THE ICC-ER REPORT NOTED ABOVE.

ADHESIVE ANCHORING SYSTEMS

1. ADHESIVES USED FOR SETTING DOWELS AND ANCHORS SHALL BE IN CONFORMANCE WITH ASTM C-881, TYPE IV. ACCEPTABLE MANUFACTURERS FOR ADHESIVES ARE AS FOLLOWS:

   MASONRY:
   HILTI HIT-HY 70 MAX (ICC ESR-2682)
   SIMPSON SET (ICC ESR-1772)

   CONCRETE:
   SIMPSON SET-XP (ICC ESR-2508)
   HILTI HIT-RE 500 V3 (ICC ESR-3814)
   HILTI HIT-HY 200 (ICC ESR-3187)
2. ANCHORS OR DOWELS EMBEDDED IN ADHESIVES SHALL BE INSTALLED PER THE MANUFACTURER'S INSTRUCTIONS.
3. HOLES RECEIVING ADHESIVE ANCHORS SHALL BE CLEAN AND FREE OF DUST PRIOR TO APPLYING ADHESIVE.
4. HOLES DRILLED INTO REINFORCED CONCRETE OR MASONRY SHALL NOT DAMAGE OR CUT EXISTING REINFORCING STEEL. HOLES DRILLED INTO PRE-STRESSED OR POST-TENSIONED CONCRETE SHALL HAVE A CLEARANCE OF ONE INCH MINIMUM FROM TENDONS. LOCATE EXISTING REINFORCING STEEL AND/OR TENDONS USING NON-DESTRUCTIVE METHODS PRIOR TO DRILLING.
5. ALL ANCHORS INSTALLED WITH ADHESIVES SHALL HAVE CONTINUOUS SPECIAL INSPECTION IN ACCORDANCE WITH THE EVALUATION REPORT (ICC-ER) AND CODE SECTIONS 1705.3 AND 1705.4.
6. ADHESIVE ANCHORS SHALL NOT BE INSTALLED IN THE UNDERSIDE OF FLOORS OR ROOFS.

STRUCTURAL OBSERVATION & SITE VISITS

KPFF WILL PROVIDE STRUCTURAL OBSERVATION SERVICES AS DEFINED IN THE CODE. SITE VISIT REPORTS WILL BE SUBMITTED IN WRITING TO THE OWNER'S REPRESENTATIVE, SPECIAL INSPECTOR AND THE BUILDING OFFICIAL. PERIODIC STRUCTURAL OBSERVATIONS WILL BE MADE AT SIGNIFICANT CONSTRUCTION STAGES AS DEFINED BELOW. THE STRUCTURAL OBSERVATION WILL CONSIST OF A VISUAL OBSERVATION OF THE STRUCTURAL SYSTEM FOR GENERAL CONFORMANCE TO THE APPROVED PLANS AND SPECIFICATIONS. STRUCTURAL OBSERVATION DOES NOT INCLUDE OR WAIVE THE RESPONSIBILITY FOR THE INSPECTIONS REQUIRED BY THE CODE. THE CONTRACTOR SHALL PROVIDE KPFF WITH A CONSTRUCTION SCHEDULE AND (5) WORKING DAYS NOTICE SO THAT THE OBSERVATION VISITS CAN BE PLANNED IN ADVANCED.

SITE VISITS

1. CONTRACTOR SHALL NOTIFY STRUCTURAL ENGINEER FIVE (5) WORKING DAYS PRIOR TO THE FOLLOWING CONSTRUCTION MILESTONES:

   SPREAD/CONTINUOUS FOOTING FOUNDATIONS:
   AFTER PLACEMENT OF REINFORCING STEEL, BASE PLATE ANCHORS, SILL PLATE ANCHORS AND HOLDOWN ANCHORS PRIOR TO PLACING OF CONCRETE.

   CONCRETE WALLS:
   AFTER PLACEMENT OF REINFORCING STEEL, PRIOR TO PLACING OF CONCRETE.

   STEEL FRAMING:
   DURING PLACEMENT OF STEEL MEMBERS.

   CONCRETE ELEVATED SLAB:
   AFTER PLACEMENT OF REINFORCING STEEL, PRIOR TO PLACING OF CONCRETE.

   METAL DECK:
   AFTER PLACEMENT OF WELDS, NAILING, AND/OR SCREWS PRIOR TO PLACING OF ROOFING MATERIAL.
2. FAILURE TO NOTIFY ARCHITECT/ENGINEER OF ANY CONSTRUCTION MILESTONES MAY RESULT IN CONTRACTOR HAVING TO REMOVE WORK FOR THE PURPOSE OF REVIEW AT THE CONTRACTOR'S EXPENSE.

SMSARCHITECTS
100 Progress | Suite 250
Irvine, California 92618
949.757.3240 | www.sms-arch.com

CONSTANT
kpff
18400 Von Karman Ave., Suite 600
Irvine, CA 92612
O: 949.252.1022
F: 949.252.8082
www.kpff.com

DANA POINT HARBOR PARTNERS

GREGORY SILVER, PE, GE 2336
GMU GEOTECHNICAL, INC.
WE HAVE REVIEWED THE PLANS AND THEY ARE IN GENERAL CONFORMANCE WITH OUR GEOTECHNICAL RECOMMENDATIONS.

x______________________

PROJECT NAME:
DANA POINT HARBOR COMMERCIAL CORE
BUILDING 12
1290 HARBOR WAY
DANA POINT, CA 92629

CLIENT
B|W|P BURNHAM|WARD PROPERTIES

REGISTERED PROFESSIONAL ENGINEER
CHRISTOPHER ANDREW DOMINAS
No. 5913
Exp. 12/31/25
STRUCTURAL
STATE OF CALIFORNIA

No.	DATE	ISSUE
	02/10/2023	100% DESIGN DEVELOPMENT
	04/21/2023	COUNTY RESUBMITTAL
A	07/24/2023	CITY RESUBMITTAL

DRAWINGS AND WRITTEN MATERIAL APPEARING HEREIN CONSTITUTE ORIGINAL AND UNPUBLISHED WORK OF SMS ARCHITECTS AND MAY NOT BE DUPLICATED, USED OR DISCLOSED WITHOUT WRITTEN CONSENT OF THE ARCHITECT

PROJECT NO. 1900799
DATE Issue Date
DRAWING TITLE
GENERAL NOTES

DRAWING NO.
S0.0.2

9/8/2023 10:40:24 AM

BIM 360://10081900799 - R21 Dana Point Harbor Revitalization/1900799_DPH_Building 12-Struct.rvt

ABBREVIATION LIST

&	AND
@	AT
AB	ANCHOR BOLT
ABV	ABV
ADDL	ADDITIONAL
ADJ	ADJACENT
AFF	ABOVE FINISHED FLOOR
AGGR	AGGREGATE
ALT	ALTERNATE
ALUM	ALUMINUM
APPVD	APPROVED
APROX	APPROXIMATELY
ARCH	ARCHITECTURAL; ARCHITECT
(B)	BOTTOM
BD	BOARD
BLDG	BUILDING
BLK	BLOCK
BLKG	BLOCKING
BLW	BELOW
BM	BEAM
BN	BOUNDARY NAIL
BOF	BOTTOM OF FOOTING
BOT OR B/	BOTTOM OF
BRCG	BRACING
BRG	BEARING
BS	BOUNDARY SCREW
BTW	BETWEEN
CALCS	CALCULATIONS
CANT	CANTILEVER
CBC	CALIFORNIA BUILDING CODE
CF	CUBIC FOOT
CG	CENTER OF GRAVITY
CIP	CAST IN PLACE
CJ	CONSTRUCTION JOINT; CONTROL JOINT
CL	CENTER LINE
CLR	CLEARANCE; CLEAR
CMU	CONCRETE MASONRY UNIT
CO	COMPANY
COL	COLUMN
COMP	COMPRESSION
CONC	CONCRETE
CONN	CONNECT; CONNECTION
CONST	CONSTRUCTION
CONT	CONTINUE; CONTINUOUS
CONTR	CONTRACTOR
CP	COMPLETE PENETRATION
CTR	CENTER
CTSK	COUNTERSINK; COUNTERSUNK
d	PENNY (NAILS)
db	BAR DIAMETER
DBL	DOUBLE
DEPT	DEPARTMENT
DET	DETAIL
DIA OR Ø	DIAMETER
DIAG	DIAGONAL
DIAPH	DIAPHRAGM
DIM	DIMENSION
DIR	DIRECTION
DIST	DISTANCE
DL	DEAD LOAD
DN	DOWN
DO	DITTO
DWG	DRAWING
DWL	DOWEL
(E) OR EXIST	EXISTING
e.g.	FOR EXAMPLE
EA	EACH
EF	EACH FACE
EJ	END JACK; EXPANSION JOINT
EL	ELEVATION
ELEC	ELECTRICAL
ELEV	ELEVATION; ELEVATOR
EMB	EMBED
EN	END NAIL
ENGR	ENGINEER
EOR	ENGINEER OF RECORD
EOS	EDGE OF SLAB
EQ	EQUAL
EQUIP	EQUIPMENT
EQUIV	EQUIVALENT
ES	EACH SIDE; EDGE SCREW
ETC	ET CETERA
EW	EACH WAY
EXT	EXTERIOR
F'c	CONCRETE COMPRESSION STRENGTH
F'm	MASONRY COMPRESSION STRENGTH
F/	FACE OF
Fb	ALLOWABLE BENDING STRESS
FD	FLOOR DRAIN
FDN	FOUNDATION
FF	FINISH FLOOR
FIN	FINISH
FLR	FLOOR
FN	FIELD NAIL
FP	FIRE PROOF; FULL PENETRATION
FRMG	FRAMING
FS	FULL SIZE; FAR SIDE; FIELD SCREW
FT	FOOT; FEET
FTG	FOOTING
Fy	YIELD STRENGTH
GA	GAUGE
GALV	GALVANIZED
GB	GRADE BEAM
GC	GENERAL CONTRACTOR
GEN	GENERAL
GLB	GLUE LAMINATED BEAM
GR	GRADE
(H)	HORIZONTAL
H OR HORIZ	HORIZONTAL
HD	HOLDOWN
HDR	HEADER
HGR	HANGER
HI	HIGH
HP	HEAVY PILING
HR	HARD ROCK
HS	HIGH STRENGTH
HT	HEIGHT
I	MOMENT OF INERTIA
i.e.	THAT IS
IBC	INTERNATIONAL BUILDING CODE
ID	INSIDE DIAMETER
IF	INSIDE FACE
IN	INCH
INCL	INCLUDE; INCLUDING
INFO	INFORMATION
INSP	INSPECTION; INSPECTOR
INT	INTERIOR
INTERM	INTERMEDIATE
INV	INVERT
JST	JOIST
JT	JOINT
k OR KIP	1,000 (e.g. POUNDS)
KO	KNOCK OUT
KP	KING POST
KSF	KIPS PER SQUARE FOOT
KSI	KIPS PER SQUARE INCH
# OR LBS	POUNDS

(L)	LONGITUDINAL
LAB	LABORATORY
LDGR	LEDGER
LF	LINEAL FOOT
LG	LONG
LIN	LINEAL; LINEAR
LL	LIVE LOAD
LLBB	LONG LEGS BACK-TO-BACK
LLH	LONG LEG HORIZONTAL
LLV	LONG LEG VERTICAL
LONGIT	LONGITUDNAL
LP	LOW POINT
LTWT	LIGHT WEIGHT
LVL	LEVEL
MAS	MASONRY
MAT	MATERIAL
MAX	MAXIMUM
MB	MACHINE BOLT
MDF	MEDIUM DENSITY FIBERBOARD
MECH	MECHANICAL
MEZZ	MEZZANINE
MFR	MANUFACTURER
MID	MIDDLE
MIN	MINIMUM
MISC	MISCELLANEOUS
MTL	METAL
# OR NO	NUMBER
(N)	NEW
N	NORTH
NF	NEAR FACE
NIC	NOT IN CONTRACT
NS	NEAR SIDE
NTS	NOT TO SCALE
OC	ON CENTER
OD	OUTSIDE DIAMETER
OF	OUTSIDE FACE
OH	OPPOSITE HAND
OPNG	OPENING
OPP	OPPOSITE
OSB	ORIENTED STRAND BOARD
OSHPD	OFFICE OF STATEWIDE HEATH PLANNING AND DEVELOPMENT
//	PARALLEL
PC	PRECAST
PCF	POUNDS PER CUBIC FOOT
PCI	POUNDS PER CUBIC INCH
PDF	POWDER DRIVEN FASTENERS
PE	POLYETHYLENE; PROFESSIONAL ENGINEER
PI	PLYWOOD INDEX
PL	PLATE; PROPERTY LINE
PLCS	PLACES
PLF	POUNDS PER LINEAR FOOT
PP	PARTIAL PENETRATION
PREFAB	PREFABRICATED
PRKG	PARKING
PROJ	PROJECT
PROP	PROPERTY
PSF	POUNDS PER SQUARE FOOT
PSI	POUNDS PER SQUARE INCH
PTFE	POLYTETRAFLOURETHYLENE (TEFLON)
PVC	POLYVINYL CHLORIDE
PVMT	PAVEMENT
⊥ OR PERP	PERPENDICULAR
R OR RAD	RADIUS
RD	ROOF DRAIN
REF	REFERNECE
REG	REGULAR
REINF	REINFORCE; REINFORCING
REQ	REQUIRED
RET	RETAINING
REV	REVISION
RF	ROOF
RM	ROOM
RO	ROUGH OPENING
S	ELASTIC SECTION MODULUS
SAD	SEE ARCHITECTURAL DRAWINGS
SCHD	SCHEDULE
SECT	SECTION
SEL	SELECT
SFRS	SEISMIC FORCE RESISTING SYSTEM
SHT	SHEET
SHTG	SHEATHING
SIM	SIMILAR
SJ	SEISMIC JOINT, SIDE JACK
SLBB	SHORT LEG BACK-TO-BACK
SMF	SPECIAL MOMENT FRAME
SMS	SHEET METAL SCREW
SOG	SLAB ON GRADE
SPCG	SPACING
SPCL	SPECIAL
SPECS	SPECIFICATIONS
SQ	SQUARE
SS	SELECT STRUCTURAL
SSH	SHORT SLOTTED HOLE
STAGG	STAGGER
STD	STANDARD
STIFF	STIFFENER
STL	STEEL
STRUCT	STRUCTURAL
SW	SHEAR WALL
SYM	SYMMETRICAL
Σ	SUM
(T)	TOP
(T)	TRANSVERSE
T	TOP
T&B	TOP & BOTTOM
T&G	TONGUE AND GROOVE
T/	TOP OF
TB	TIE BEAM
TEMP	TEMPORARY; TEMPERATURE
THK	THICK
THRU	THROUGH
TL	TOTAL LOAD
TN	TOE NAIL
TOF	TOP OF FOOTING
TOGB	TOP OF GRADE BEAM
TOL	TOP OF LEDGER
TOS	TOP OF STEEL
TOSL	TOP OF SLAB
TOW	TO OF WALL
TRANSV	TRANSVERSE
TSP	TAPERED STEEL GIRDER
TYP	TYPICAL
UL	UNDERWRITERS LABORATORY, INC
UNO	UNLESS NOTED OTHERWISE
UT	ULTRASONIC TESTING
(V)	VERTICAL
V OR VERT	VERTICAL
VIF	VERIFY IN FIELD
W/	WITH
W/C	WATER-CEMENT RATIO
W/O	WITHOUT
WF	WIDE FLANGE
WHT	WEIGHT
WP	WORK POINT
WWF	WELDED WIRE FABRIC

C	STRUCTURAL STEEL SHAPES STANDARD CHANNEL
HP	HP SHAPE
HSS	HOLLOW STRUCTURAL STEEL
L	ANGLES
M	M SHAPES
MC	MISC CHANLES
PIPE#-STD	STANDARD PIPE
PIPE#-XSTRONG	EXTRA STRONG PIPE
PIPE#-XXSTRONG	DOUBLE EXTRA STRONG PIPE
S	S SHAPE
TS	TUBE STEEL
W	W SHAPE
WT, ST, MT	STRUCT TEES CUT FROM W, S, M SHAPES
	INSTITUTIONS
ACI	AMERICAN CONCRETE INSTITUTE
AISC	AMERICAL INSTITUTE OF STEEL CONSTRUCTION
AISI	AMERICAN IRON AND STEEL INSTITUTE
AITC	AMERICAN INSTITUTE OF TIMBER CONSTRUCTION
ANSI	AMERICAN NATIONAL STANDARDS INSTITUTE
APA	AMERICAN PLYWOOD ASSOCIATIONS
ASTM	AMERICAN SOCIETY FOR TESTING AND MATERIALS
AWPB	AMERICAN WOOD PERSERVERS BUREAU
AWS	AMERICAN WELDING SOCIETY
CRSI	CONCRETE REINFORCING STEEL INSTITUTE
ICBO	INTERNATIONAL CONFERENCE OF BUILDING OFFICIALS
ICC	INTERNATIONAL CODE COUNCIL
ICC-ER	ICC-ES LEGACY REPORT
ICC-ES	ICC EVALUATION SERVICES
ICC-ESR	ICC-ES REPORT
PCI	PRECAST CONCRETE INSTITUTE
PTI	POST-TENSION CONCRETE INSTITUTE
SJI	STEEL JOIST INSTITUTE
TPI	TRUSS PLATE INSTITUTE

DETAIL REFERENCE

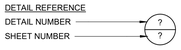

CALLOUT REFERENCE

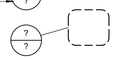

SECTION REFERENCE



ELEVATION REFERENCE



NORTH SYMBOL



ELEVATION REFERENCE

EL = X'-XX"

CLOUD AND REVISIONS



GRID SYSTEM

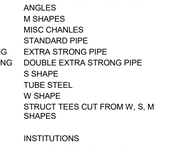

NONDESTRUCTIVE TESTING (NDT) OF WELDS

1. NONDESTRUCTIVE TESTING OF WELDS SHALL BE PERFORMED BY QUALITY ASSURANCE PERSONNEL.
2. UT AND MT SHALL BE PERFORMED BY QA ACCORDING TO THE PROCEDURES PRESCRIBED IN AWS D1.8/D1.8M.
3. AREAS REQUIRING NONDESTRUCTIVE TESTING ARE IDENTIFIED BELOW:
   a. k-AREA NDT: WHEN WELDING OF DOUBLER PLATES, CONTINUITY PLATES, OR STIFFENERS HAS BEEN PERFORMED IN THE k-AREA, THE WEB SHALL BE TESTED FOR CRACKS USING MT. THE MT INSPECTION AREA SHALL INCLUDE THE k-AREA BASE METAL WITHIN 3" OF THE WELD. THE MT SHALL BE PERFORMED NO SOONER THAN 48 HOURS FOLLOWING COMPLETION OF WELDING.
   b. CJP GROOVE WELD NDT: UT SHALL BE PERFORMED ON 100 PERCENT OF CJP GROOVE WELDS IN MATERIALS 5/16" THICK OR GREATER. UT IN MATERIALS LESS THAN 5/16" THICK IS NOT REQUIRED. MT SHALL BE PERFORMED ON 25 PERCENT OF ALL BEAM TO COLUMN CJP GROOVE WELDS.
   c. BASE METAL NDT FOR LAMELLAR TEARING AND LAMINATIONS AFTER JOINT COMPLETION. BASE METAL THICKER THAN 1 1/2" LOADED IN TENSION IN THE THROUGH THICKNESS DIRECTION IN TEE AND CORNER JOINTS, WHERE THE CONNECTED MATERIAL IS GREATER THAN 3/4" AND CONTAINS CJP GROOVE WELDS, SHALL BE ULTRASONICALLY TESTED FOR DISCONTINUITIES BEHIND AND ADJACENT TO THE FUSION LINE OF SUCH WELDS. ANY BASE METAL DISCONTINUITIES FOUND WITHIN 1/4 OF THE STEEL SURFACE SHALL BE ACCEPTED OR REJECTED ON THE BASIS OF CRITERIA OF AWS D1.1/D1.1M TABLE 6.2, WHERE "t" IS THE THICKNESS OF THE PART SUBJECTED TO THE THROUGH-THICKNESS STRAIN.
   d. BEAM COPE AND ACCESS HOLE NDT: AT WELDED SPLICES AND CONNECTIONS, THERMALLY CUT SURFACES OF BEAM COPES AND ACCESS HOLES SHALL BE TESTED USING MT OR PENETRANT TESTING, WHEN THE FLANGE THICKNESS EXCEEDS 1-1/2" FOR ROLLED SHAPES, OR WHEN THE WEB THICKNESS EXCEEDS 1-1/2" FOR BUILT-UP SHAPES.
   e. RBS REPAIR NDT: MT SHALL BE PERFORMED ON ANY WELD AND ADJACENT AREA OF THE RBS CUT SURFACE THAT HAS BEEN REPAIRED BY WELDING, OR ON THE BASE METAL OF THE RBS CUT SURFACE IF A SHARP NOTCH HAS BEEN REMOVED BY GRINDING.
   f. WELD TAB REMOVAL SITES MT SHALL BE PERFORMED ON THE END OF WELDS FROM WHICH THE WELD TABS HAVE BEEN REMOVED, EXCEPT FOR CONTINUITY PLATE WELD TABS.
4. THE AMOUNT OF UT IS PERMITTED TO BE REDUCED IF APPROVED BY THE ENGINEER OF RECORD AND THE BUILDING DEPARTMENT. THE NDT RATE FOR AN INDIVIDUAL WELDER OR WELDING OPERATOR MAY BE REDUCED TO 25 PERCENT, PROVIDED THE REJECT RATE IS DEMONSTRATED TO BE 5 PERCENT OR LESS OF THE WELDS TESTED FOR THE WELDER OR WELDING OPERATOR. A SAMPLING OF AT LEAST 40 COMPLETED WELDS FOR A JOB SHALL BE MADE FOR SUCH A REDUCTION EVALUATION. REJECT RATE IS THE NUMBER OF WELDS CONTAINING REJECTABLE DEFECTS DIVIDED BY THE NUMBER OF WELDS COMPLETED. FOR EVALUATING THE REJECT RATE OF CONTINUOUS WELDS OVER 3'-0" IN LENGTH WHERE THE EFFECTIVE THROAT THICKNESS IS 1" OR LESS, EACH 12" INCREMENT OR FRACTION THEREOF SHALL BE CONSIDERED AS ONE WELD. FOR EVALUATING THE REJECT RATE ON CONTINUOUS WELDS OVER 3'-0" IN LENGTH WHERE THE EFFECTIVE THROAT THICKNESS IS GREATER THAN 1", EACH 6" OF LENGTH OR FRACTION THEREOF SHALL BE CONSIDERED ONE WELD.
5. THE AMOUNT OF MT ON CJP GROOVE WELDS IS PERMITTED TO BE REDUCED IF APPROVED BY THE ENGINEER OF RECORD AND THE BUILDING DEPARTMENT. THE MT RATE FOR AN INDIVIDUAL WELDER OR WELDING OPERATOR MAY BE REDUCED TO 10 PERCENT, PROVIDED THE REJECT RATE IS DEMONSTRATED TO BE 5 PERCENT OR LESS OF THE WELDS TESTED FOR THE WELDER OR WELDING OPERATOR. A SAMPLING OF AT LEAST 20 COMPLETED WELDS FOR A JOB SHALL BE MADE FOR SUCH REDUCTION EVALUATION. REJECT RATE IS THE NUMBER OF WELDS CONTAINING REJECTABLE DEFECTS DIVIDED BY THE NUMBER OF WELDS COMPLETED. THIS REDUCTION IS NOT PERMITTED ON WELDS IN THE k-AREA, AT REPAIR SITES, BACKING REMOVAL SITES AND ACCESS HOLES.
6. ALL NDT PERFORMED SHALL BE DOCUMENTED. FOR SHOP FABRICATION, THE NDT REPORT SHALL IDENTIFY THE TESTED WELD BY PIECE MARK LOCATION IN THE PIECE. FOR FIELD WORK, THE NDT REPORT SHALL IDENTIFY THE TESTED WELD BY LOCATION IN THE STRUCTURE, PIECE MARK, AND LOCATION OF THE PIECE.

INSPECTION OF HIGH STRENGTH BOLTING

1. VISUAL INSPECTION POINTS AND FREQUENCIES OF QC AND QA TASK AND DOCUMENTATION FOR THE SFRS SHALL BE PROVIDED IN THE FOLLOWING TABLES.

INSPECTION TASKS PRIOR TO BOLTING	QC		QA	
	TASK	DOC.	TASK	DOC.
PROPER FASTENERS SELECTED FOR THE JOINT DETAIL	O	-	O	-
PROPER BOLTING PROCEDURE SELECTED FOR JOINT DETAIL	O	-	O	-
CONNECTING ELEMENTS ARE FABRICATED PROPERLY, INCLUDING THE APPROPRIATE FAYING SURFACE CONDITION AND HOLE PREPARATION, IF SPECIFIED, MEETS APPLICABLE REQUIREMENTS	O	-	O	-
PRE-INSTALLATION VERIFICATION TESTING CONDUCTED FOR FASTENER ASSEMBLIES AND METHODS USED	P	D	O	D
PROPER STORAGE PROVIDED FOR BOLTS, NUTS, WASHERS, AND OTHER FASTENER COMPONENTS.	O	-	O	-
SEE LEGEND FOR NOTES				

INSPECTION TASKS DURING BOLTING	QC		QA	
	TASK	DOC.	TASK	DOC.
FASTENER ASSEMBLIES PLACED IN ALL HOLES AND WASHERS ARE PROPERLY POSITIONED (AS REQUIRED)	O	-	O	-
JOINT BROUGHT TO THE SNUG TIGHT CONDITION PRIOR TO THE PRETENSIONING OPERATION	O	-	O	-
FASTENER COMPONENT NOT TURNED BY THE WRENCH PREVENTED FROM ROTATING	O	-	O	-
BOLTS ARE PRETENSIONED PROGRESSING SYSTEMATICALLY FROM MOST RIGID POINT TOWARDS FREE EDGES	O	-	O	-
SEE LEGEND FOR NOTES				

INSPECTION TASKS AFTER BOLTING	QC		QA	
	TASK	DOC.	TASK	DOC.
DOCUMENT ACCEPTED AND REJECTED CONNECTIONS	P	D	P	D
SEE LEGEND FOR NOTES				

OTHER INSPECTIONS

1. WHERE APPLICABLE, THE FOLLOWING INSPECTION TASKS SHALL BE PERFORMED:

OTHER INSPECTION TASKS	QC		QA	
	TASK	DOC.	TASK	DOC.
PROTECTED ZONE - NO HOLES AND UNAPPROVED ATTACHMENTS MADE BY THE CONTRACTOR	P	D	P	D

LEGEND

O OBSERVE - THE INSPECTOR SHALL OBSERVE THESE FUNCTIONS ON A RANDOM, DAILY BASIS. WELDING OPERATIONS NEED NOT BE DELAYED PENDING OBSERVATIONS.

P PERFORM - THESE INSPECTIONS SHALL BE PERFORMED PRIOR TO THE FINAL ACCEPTANCE OF THE ITEM.

D DOCUMENT - THE INSPECTOR SHALL PREPARE REPORTS INDICATING THAT THE WORK HAS BEEN PERFORMED IN ACCORDANCE WITH THE CONTRACT DOCUMENTS. THE REPORT NEED NOT PROVIDE DETAILED MEASUREMENTS FOR JOINT FIT-UP, WPS SETTINGS, COMPLETED WELDS, OR INDIVIDUAL ITEMS LISTED IN THE TABLES. FOR SHOP FABRICATION, THE REPORT SHALL INDICATE THE PIECE MARK OF THE PIECE INSPECTED. FOR FIELD WORK, THE REPORT SHALL INDICATE THE REFERENCE GRID LINES AND FLOOR OR ELEVATION INSPECTED. WORK NOT IN COMPLIANCE WITH THE CONTRACT DOCUMENTS AND WHETHER THE NONCOMPLIANCE HAS BEEN SATISFACTORY REPAIRED SHALL BE NOTED IN THE INSPECTION REPORT.

SEISMIC FORCE RESISTING SYSTEM

1. VISUAL INSPECTION POINTS AND FREQUENCIES OF QC AND QA TASK AND DOCUMENTATION FOR THE SFRS SHALL BE PROVIDED IN THE FOLLOWING TABLES.

VISUAL INSPECTION TASKS BEFORE WELDING	QC		QA	
	TASK	DOC.	TASK	DOC.
MATERIAL IDENTIFICATION (TYPE/GRADE)	O	-	O	-
WELDER IDENTIFICATION SYSTEM	O	-	O	-
FIT-UP OF GROOVE WELDS (INCLUDING JOINT GEOMETRY)				
- JOINT PREPARATION				
- DIMENSIONS (ALIGNMENT, ROOT OPENING, ROOT FACE, BEVEL)	P/O**	-	O	-
- CLEANLINESS (CONDITION OF STEEL SURFACES)				
- TACKING (TACK WELD QUALITY AND LOCATION)				
- BACKING TYPE AND FIT (IF APPLICABLE)				
CONFIGURATION AND FINISH OF ACCESS HOLES	O	-	O	-
FIT-UP OF FILLET WELDS - DIMENSIONS (ALIGNMENT, GAPS AT ROOT) - CLEANLINESS (CONDITION OF STEEL SURFACES) - TACKING (TACK WELD QUALITY AND LOCATION)	P/O**	-	O	-

**FOLLOWING PERFORMANCE OF THIS INSPECTION TASK FOR TEN WELDS TO BE MADE BY A GIVEN WELDER, WITH THE WELDER DEMONSTRATING ADEQUATE UNDERSTANDING OF REQUIREMENTS AND POSSESSION OF SKILLS AND TOOLS TO VERIFY THESE ITEMS, THE PERFORM DESIGNATION OF THIS TASK SHALL BE REDUCED TO OBSERVE (O), AND THE WELDER SHALL PERFORM THIS TASK. SHOULD THE INSPECTOR DETERMINE THAT THE WELDER HAS DISCONTINUED ADEQUATE PERFORMANCE OF THIS TASK, THE TASK SHALL BE RETURNED TO PERFORM (P) UNTIL SUCH TIME AS THE INSPECTOR HAS REESTABLISHED ADEQUATE ASSURANCE THAT THE WELDER WILL PERFORM THE INSPECTION TASKS LISTED.

SEE LEGEND FOR NOTES

VISUAL INSPECTION TASKS DURING WELDING	QC		QA	
	TASK	DOC.	TASK	DOC.
WPS FOLLOWED				
- SETTINGS ON WELDING EQUIPMENT				
- TRAVEL SPEED				
- SELECTED WELDING MATERIALS				
- SHIELDING GAS TYPE/FLOW RATE	O	-	O	-
- PREHEAT APPLIED				
- INTERPASS TEMPERATURE MAINTAINED (MIN./MAX.)				
- PROPER POSITION (F, V, H, OH)				
- INTERMIX OF FILLER METALS AVOIDED UNLESS APPROVED				
USE OF QUALIFIED WELDERS	O	-	O	-
CONTROL AND HANDLING OF WELDING CONSUMABLES				
- PACKAGING	O	-	O	-
- EXPOSURE CONTROL				
ENVIRONMENTAL CONDITIONS				
- WIND SPEED WITHIN LIMITS	O	-	O	-
- PRECEPITATION AND TEMPERATURE				
WELDING TECHNIQUES				
- INTERPASS AND FINAL CLEANING				
- EACH PAS WITHIN PROFILE LIMITATIONS	O	-	O	-
- EACH PASS MEETS QUALITY REQUIREMENTS				
NO WELDING OVER CRACKED TACKS	O	-	O	-
SEE LEGEND FOR NOTES				

VISUAL INSPECTION TASKS AFTER WELDING	QC		QA	
	TASK	DOC.	TASK	DOC.
WELDS CLEANED	O	-	O	-
VERIFY SIZE, LENGTH, AND LOCATION OF WELDS	P	-	P	-
VISUALLY INSPECT WELDS TO ACCEPTANCE CRITERIA				
- CRACK PROHIBITION				
- WELD/BASE METAL FUSION				
- CRATER CROSS SECTION	P	D	P	D
- WELD PROFILES AND SIZES				
- UNDERCUT				
- POROSITY				
PLACEMENT OF REINFORCING OR CONTOURING FILLETS (IF REQUIRED)	P	D	P	D
BACKING BARS REMOVED AND WELD TABS REMOVED AND FINISHED, AND FILLET WELDS ADDED (IF REQUIRED)	P	D	P	D
REPAIR ACTIVITIES	P	-	P	D
SEE LEGEND FOR NOTES				

DEFINITIONS

CVN	- CHARPY V-NOTCH
SFRS	- SEISMIC FORCE RESISTING SYSTEM
WPS	- WELDING PROCEDURE SPECIFICATION
MT	- MAGNETIC PARTICLE TESTING
UT	- ULTRASONIC TESTING
CJP	- COMPLETE JOINT PENETRATION
PJP	- PARTIAL JOINT PENETRATION
QA	- QUALITY ASSURANCE
QC	- QUALITY CONTROL
RBS	- REDUCED BEAM SECTION
SMF	- SPECIAL MOMENT FRAME
OMF	- ORDINARY MOMENT FRAME
IMF	- INTERMEDIATE MOMENT FRAME
STMF	- SPECIAL TRUSS MOMENT FRAME
OCCS	- ORDINARY CANTILEVER COLUMN SYSTEM
SCCS	- SPECIAL CANTILEVER COLUMN SYSTEM
OCBF	- ORDINARY CONCENTRICALLY BRACED FRAME
SCBF	- SPECIAL CONCENTRICALLY BRACED FRAME
EBF	- ECCENTRICALLY BRACED FRAME
BRBF	- BUCKLING-RESTRAINED BRACED FRAME
SPSW	- SPECIAL PLATE SHEAR WALL

Zoning: CanningK 11/13/2024

Building&Safety: OCPWAzarvandB 12/22/2025

Permits: BNR21-0246, ELE21-0853, MEC21-0514, PLB21-0900

County of Orange - OC Public Works
OC Development Services
APPROVED
This set of plans and specifications must be kept on the job at all times. It is unlawful to make any changes or alterations to these plans without written permission from OC Public Works, OC Development Services of Orange County. The stamping of these plan specifications SHALL NOT be held to permit or be an approval of the violation of any provision of any County Ordinance or State law.
Hani Tehrani
BUILDING OFFICIAL

STRUCTURAL STEEL IN SFRS

1. STRUCTURAL STEEL IN THE SFRS CONSISTS OF AN ASSEMBLY OF STRUCTURAL ELEMENTS THAT RESISTS SEISMIC LOADS INCLUDING BUT NOT LIMITED TO FRAMES, BRACED FRAMES, STEEL PLATE SHEAR WALLS, BRACES, STRUTS, COLLECTORS, CHORDS, DIAPHRAGMS, AND COLUMN SPLICES. THIS INCLUDES ALL CONNECTIONS BETWEEN THESE ELEMENTS. MEMBERS AND CONNECTIONS OF THE SFRS ARE IDENTIFIED ON THE PLANS BY "*" (UNO).
2. CONNECTION JOINTS AND FASTNERS SHALL COMPLY WITH AISC 341-10, SECTION D.2 AND ADDITIONAL REQUIREMENTS BELOW.
3. BOLTED CONNECTIONS SHALL BE MADE WITH HIGH STRENGTH SLIP CRITICAL BOLTS AND COMPLY WITH AISC 341-10, SECTION D.2.2.
4. WELDING SHALL BE PERFORMED IN ACCORDANCE WITH AWS D1.8 W. ALL WELDS SHALL BE MADE WITH A FILLER MATERIAL THAT CAN PRODUCE WELDS THAT HAVE A CHARPY V-NOTCH TOUGHNESS AS SPECIFIED IN AISC 341-10.
5. WHERE A PROTECTED ZONE IS DESIGNATED BY THE DRAWING SPECIFICATIONS OR AISC 358 (PREQUALIFIED CONNECTIONS FOR SMF AND IMF) IT SHALL ALSO COMPLY WITH AISC 341-10, SECTION D.1.3.
6. CORNERS OF CONTINUITY PLATES AND STIFFNER PLATES SHALL BE CLIPPED AND COMPLY WITH AISC 341-10 , SECTION D.2.4.
7. COLUMN SPLICE LOCATION AND STRENGTH SHALL COMPLY WITH AISC 341-10, SECTION D.2.5.
8. OMF SHALL CONFORM TO AISC 341-10, SECTION E.1.
9. IMF SHALL CONFORM TO AISC 341-10, SECTION E.2.
10. SMF SHALL CONFORM TO AISC 341-10, SECTION E.3.
11. STMF SHALL CONFORM TO AISC 341-10, SECTION E.4.
12. OCCS SHALL CONFORM TO AISC 341-10, SECTION E.5.
13. SCCS SHALL CONFORM TO AISC 341-10, SECTION E.6.
14. OBF SHALL CONFORM TO AISC 341-10, SECTION F.1.
15. SCBF SHALL CONFORM TO AISC 341-10, SECTION F.2.
16. EBF SHALL CONFORM TO AISC 341-10, SECTION F.3.
17. BRBF SHALL CONFORM TO AISC 341-10, SECTION F.4.
18. SPSW SHALL CONFORM TO AISC 341-10, SECTION F.5.

WELDED JOINTS

1. ALL WELDING OF STEEL MEMBERS AND THEIR CONNECTIONS THAT ARE PART OF THE SFRS SHALL BE PERFORMED IN ACCORDANCE WITH AWS D1.8/D1.8M. ALL WELDING SHALL BE PERFORMED IN ACCORDANCE WITH A WELDING PROCEDURE SPECIFICATION (WPS) PREPARED IN ACCORDANCE WITH AWS D1.1/D1.8M AND AS APPROVED BY THE ENGINEER OF RECORD.
2. THE WPS VARIABLES SHALL BE WITHIN THE PARAMETERS ESTABLISHED BY THE FILLER METAL MANUFACTURER. THIS MANUFACTURER PRESCRIBED WELDING PARAMETERS SHALL BE SUBMITTED WITH THE WPS.
3. WELDING SHALL NOT COMMENCE UNTIL A WPS HAS BEEN SUBMITTED AND APPROVED BY THE ENGINEER OF RECORD.

CHARPY V-NOTCH (CVN) TOUGHNESS

1. ALL WELDS FOR MEMBERS AND CONNECTIONS THAT ARE PART OF THE SFRS SHALL HAVE A FILLER METAL WITH A MINIMUM CVN TOUGHNESS VALUE OF 20 FT-LB AT 0°F AS DETERMINED BY THE APPROPRIATE AWS A5 CLASSIFICATION TEST METHOD.
2. THE COMPLETE JOINT PENETRATION GROOVE WELDS DESCRIBED BELOW SHALL HAVE A FILLER METAL WITH A MINIMUM CVN TOUGHNESS OF 40 FT-LB AT 70°F FOR A LOWEST ANTICIPATED SERVICE TEMPERATURE OF 50°F OR GREATER. SEE AWS D1.8/D1.8M FOR DETAILED TESTING REQUIREMENTS FOR A LOWEST ANTICIPATED SERVICE TEMPERATURE LESS THAN 50°F.

	SMF	OMF	IMF	STMF	OCCS	SCCS	OCBF	SCBF	EBF	BRBF	SPSW
a. GROOVE WELDS AT COLUMN SPLICES.	X		X		X		X	X	X	X	X
b. WELDS AT COLUMN TO BASE PLATE CONNECTIONS.	X		X	X	X		X	X	X	X	X
c. CJP GROOVE WELDS OF BEAM FLANGES AND BEAM WEBS TO COLUMNS.	X	X	X								
d. WELDS AT BEAM TO COLUMN CONNECTIONS.								X	X	X	
e. WELDS ATTACHING THE LINK FLANGES AND THE LINK WEB TO COLUMN.								X			
f. WELDS CONNECTING THE WEBS TO THE FLANGES IN BUILT UP BEAMS WITHIN LINK.								X			
g. WELDS AT HBE TO VBE.											X
THESE SYSTEMS DO NOT HAVE DEMAND CRITICAL WELD REQUIREMENTS.				X		X					

1. HOT ROLLED SHAPES WITHIN THE SFRS WITH FLANGES 1 1/2" THICK AND THICKER SHALL HAVE A CVN TOUGHNESS OF 20 FT-LB AT 70°F TESTED IN THE ALTERNATE CORE LOCATION AS DESCRIBED IN ASTM A6 SUPPLEMENTARY REQUIREMENT S30. PLATES 2" THICK AND THICKER WITHIN THE SFRS SHALL HAVE A CVN TOUGHNESS OF 20 FT-LB @ 70°F MEASURED AT ANY LOCATION, PERMITTED BY ASTM A673, FREQUENCY P, WHERE THE PLATE IS USED IN THE FOLLOWING:
   a. MEMBERS BUILT-UP FROM PLATE.
   b. CONNECTION PLATES (GUSSET PLATES, COLUMN BASE PLATES, ETC.).
   c. AS THE STEEL CORE OF BUCKLING RESTRAINED BRACES.

QUALITY ASSURANCE PLAN

1. VISUAL WELDING INSPECTION AND NONDESTRUCTIVE TESTING (NDT) SHALL BE CONDUCTED IN ACCORDANCE WITH A WRITTEN PRACTICE BY PERSONNEL

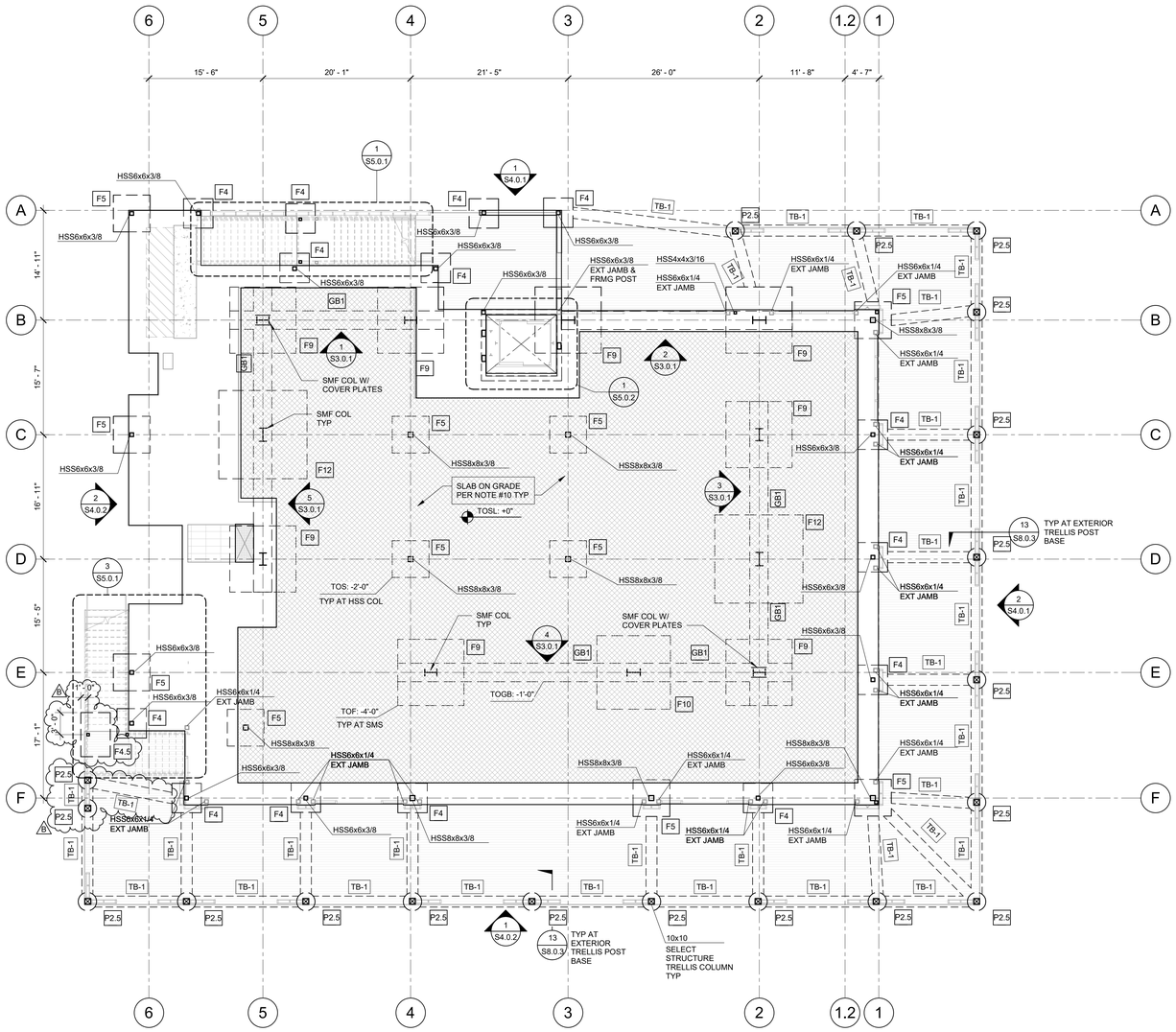

THIS PLAN HAS BEEN REVIEWED BY GMU GEOTECHNICAL, INC. FOR GENERAL CONFORMITY TO THE RECOMMENDATIONS CONTAINED IN THE PROJECT GEOTECHNICAL REPORT(S).

REVIEW OF NON-GEOTECHNICAL ENGINEERING DESIGN IS OUTSIDE OF GMU GEOTECHNICAL, INC.'S PURVIEW.

REGISTERED PROFESSIONAL ENGINEER SCOTT H MAGRO C95205 CIVIL STATE OF CALIFORNIA

THIS PLAN HAS BEEN REVIEWED BY GMU GEOTECHNICAL, INC. FOR GENERAL CONFORMITY TO THE RECOMMENDATIONS / CONCLUSIONS CONTAINED IN THEIR GEOTECHNICAL REPORT(S).

REVIEW OF NON-GEOTECHNICAL ENGINEERING DESIGN IS OUTSIDE THE PURVIEW OF GMU GEOTECHNICAL, INC.

ARON R. TAYLOR CEG 2455 12/7/23

PROFESSIONAL GEOLOGIST ARON R. TAYLOR No. 2455 CERTIFIED ENGINEERING GEOLOGIST STATE OF CALIFORNIA

FOUNDATION PLAN 1/8" = 1'-0" **1**

Zoning: CanningK 11/13/2024

Building&Safety: OCPWAzarvandB 12/22/2025

Permits: BNR21-0246, ELE21-0853, MEC21-0514, PLB21-0900

County of Orange - OC Public Works
OC Development Services
APPROVED

This set of plans and specifications must be kept on the job at all times. It is unlawful to make any changes or alterations to these plans without written permission from OC Public Works, OC Development Services of Orange County. The stamping of these plan specifications SHALL NOT be held to permit or be an approval of the violation of any provisions of any County Ordinance or State law.

Hani Tahsbsaee
BUILDING OFFICIAL

FOUNDATION PLAN NOTES

1. SEE THESE SHEETS FOR THE FOLLOWING INFORMATION:
   A. GENERAL NOTES: S0.0.1 THRU S0.0.3.
   B. ABBREVIATIONS AND SYMBOLS: S0.0.3.
   C. TYPICAL CONCRETE DETAILS: S8.0.1 THRU S8.0.3.
   D. TYPICAL STEEL DETAILS: S8.2.1 THRU S8.2.4.
   E. TYPICAL METAL STUD DETAILS: S8.4.1 THRU S8.4.5.
2. VERIFY ALL DIMENSIONS, ELEVATIONS FINISH SURFACES,SLOPE, DRAINS, DEPRESSIONS, CURBS, ETC. WITH ARCHITECTURAL DRAWINGS PRIOR TO START OF CONSTRUCTION.
3. SPECIFICATIONS AND DETAILING OF ALL WATERPROOFING AND DRAINAGE ITEMS, ALTHOUGH MAY BE INDICATED ON THE STRUCTURAL DRAWINGS FOR GENERAL INFORMATION PURPOSES ONLY, ARE THE DESIGN RESPONSIBILITY OF OTHERS.
4. SEE ARCHITECTURAL DRAWINGS FOR EDGE OF SLAB DIMENSIONS.
5. COORDINATE WITH MECHANICAL/PLUMBING/LANDSCAPE DRAWINGS FOR REQUIRED SLAB PENETRATIONS.
6. FOR FINISH FLOOR ELEVATIONS, SEE ARCHITECTURAL DRAWINGS.
7. REFER TO ARCHITECTURAL, MECHANICAL, PLUMBING AND ELECTRICAL DRAWINGS FOR ADDITIONAL INFORMATION. IT IS THE CONTRACTOR'S RESPONSIBILITY TO IDENTIFY ANY DISCREPANCY PRIOR TO POUR NOTIFY THE ENGINEER FOR CORRECTIVE MEASURES.
8. REFER TO ARCHITECTURAL DRAWINGS FOR SLAB ELEVATIONS, DEPRESSIONS, SLOPES, OPENINGS, CURBS, DRAINS, TRENCHES, SLAB EDGE LOCATIONS, HOUSEKEEPING PADS, TIPS, SWALES, EXTERIOR SLAB ETC. AND FOR WALL OVERALL DIMENSIONS, LOCATION OF OPENINGS ETC. NOT INDICATED ON STRUCTURAL DRAWINGS.
9. CENTER COLUMNS ON GRID LINES UNLESS NOTED OTHERWISE.
10. SLAB ON GRADE SHALL BE 5" THICK WITH #4 @ 18" OC EACH WAY AT MID-DEPTH OF SLAB PER DETAIL 1/ S8.0.2 . SEE DETAIL 2/ S8.0.2 FOR CONTROL JOINT REQUIREMENTS. AT SLAB OPENINGS PROVIDE (1) TYPICAL SLAB LONGITUDINAL/ TRANSVERSE BAR ALIGNED WITH EDGE OF OPENING AND PROVIDE DIAGONAL REINFORCEMENT AROUND OPENINGS WHEN REQUIRED PER DETAIL 11/ S8.0.2 , UNDERLAIN BY A 15 MIL STEGOWRAP OR EQUIVALENT VAPOR BARRIER.
11. ANY DAMAGE TO THE SLAB ON GRADE, THAT IS NOT INTENDED FOR DEMOLITION, DUE TO VEHICULAR TRAFFIC SHALL BE REPAIRED/ REPLACED AT THE EXPENSE OF THE CONTRACTOR.
12. CONTRACTOR SHALL PROVIDE ALL MEASURES NECESSARY TO PROTECT THE STRUCTURE DURING CONSTRUCTION. SUCH MEASURES SHALL INCLUDE, BUT NOT BE LIMITED TO, BRACING, SHORING FOR LOADS DUE TO CONSTRUCTION EQUIPMENT, ETC. OBSERVATION VISITS TO THE SITE BY THE STRUCTURAL ENGINEER SHALL NOT INCLUDE INSPECTION OF THE ABOVE ITEMS.
13. FOR PIPE PENETRATIONS THROUGH FOOTINGS SEE 7/ S8.0.1 .
14. ONLY LOAD BEARING WALLS AND SHEARWALLS ARE SHOWN. SEE ARCHITECTURAL DRAWINGS FOR NON-BEARING WALL LOCATIONS.
15. REFER TO GEOTECHNICAL REPORT, AS NOTED ON SHEET S0.0.1, AND G0.0.1 FOR DEEP SOIL MIXING, LOAD TRANSFER PLATFORMS, AND OTHER GEOTECHNICAL RECOMMENDATIONS AND DETAILS.

FOUNDATION PLAN SYMBOLS

- TOSL: X'-XX" — INDICATES TOP OF SLAB ELEVATION FROM 0'-0" CORRESPONDING TO DATUM ELEVATION OF 13.00' PER CIVIL DRAWINGS.
- TOF: X'-XX" — INDICATES TOP OF FOOTING ELEVATION FROM 0'-0" TYP, UNO ON PLAN. TOP OF ALL FOOTING ELEVATION SHALL BE -2'-0" FROM TOP OF SLAB UNO ON PLAN.
- T/ GB: X'-XX" — INDICATES TOP OF GRADE BEAM ELEVATION FROM 0'-0" TYP, UNO ON PLAN. TOP OF ALL GRADE BEAMS ELEVATION SHALL BE -1'-0" FROM TOP OF SLAB UNO ON PLAN.
- INDICATES CHANGE IN SLAB ELEVATION.
- INDICATES SLAB SLOPE CHANGE.
- F# — INDICATES FOOTING TYP PER SCHEDULE BELOW.
- INDICATES STEPPED FOOTING PER 9/ S8.0.1.
- GB-# — INDICATES GRADE BEAM PER SCHEDULE BELOW.
- INDICATES CONCRETE CURB PER 6/ S8.0.2. VERIFY WITH ARCHITECTURAL DRAWINGS FOR LOCATIONS.
- INDICATES STEEL COLUMN. SEE PLAN FOR SIZES.
- (MEMBER SIZE) — INDICATES MEMBER OR DETAIL IS PART OF THE SEISMIC FORCE RESISTING SYSTEM (SFRS). REFER TO SHEET S0.0.3 FOR SFRS NOTES.
- INDICATES FUTURE SLAB ON GRADE TO MATCH AS NOTED IN NOTE #10 ABOVE.

FOUNDATION SCHEDULE - PAD

TYPE	LENGTH	WIDTH	THICKNESS	REINFORCING
F4	4' - 0"	4' - 0"	1' - 6"	(4) #6 EA WAY T&B
F4.5	6' - 0"	4' - 0"	1' - 6"	(6) #6 EA WAY T&B
F5	6' - 0"	6' - 0"	2' - 0"	(6) #6 EA WAY T&B
F9	9' - 0"	9' - 0"	2' - 6"	(14) #6 EA WAY T&B
F10	10' - 0"	10' - 0"	2' - 6"	(15) #6 EA WAY T&B
F12	12' - 0"	12' - 0"	2' - 0"	(16) #6 EA WAY T&B

FOUNDATION SCHEDULE - PILE

MARK	DIAMETER	DEPTH	REINFORCEMENT
P2.5	2' - 6"	8' - 3"	(6) #7 VERT BARS W/ #4 TIES

FOUNDATION SCHEDULE - GRADE BEAM

MARK	WIDTH	THICKNESS	REINFORCEMENT
GB1	2' - 6"	3' - 0"	(8) #9 LONGIT T&B

FOUNDATION SCHEDULE - TIE BEAM

MARK	WIDTH	THICKNESS	REINFORCEMENT
TB-1	1' - 6"	1' - 6"	(2) #5 LONGIT T&B

SMS ARCHITECTS
100 Progress | Suite 250
Irvine, California 92618
949.757.3240 | www.sms-arch.com

CONSTANT

DANA POINT HARBOR PARTNERS

PROJECT NAME
DANA POINT HARBOR COMMERCIAL CORE
BUILDING 12
1290 HARBOR WAY
DANA POINT, CA 92629

CLIENT
BURNHAM | WARD PROPERTIES

REGISTERED PROFESSIONAL ENGINEER JENNIFER ANDREW SCHMIDT No. 5913 Exp. 12/31/25 STRUCTURAL STATE OF CALIFORNIA

No.	DATE	ISSUE
	02/10/2023	100% DESIGN DEVELOPMENT
	04/21/2023	COUNTY RESUBMITTAL
A	07/24/2023	CITY RESUBMITTAL
B	02/12/2025	CITY RESUBMITTAL

DRAWINGS AND WRITTEN MATERIAL APPEARING HEREIN CONSTITUTE ORIGINAL AND UNPUBLISHED WORK OF SMS ARCHITECTS AND MAY NOT BE DUPLICATED, USED OR DISCLOSED WITHOUT WRITTEN CONSENT OF THE ARCHITECT

PROJECT NO. 1900799

DATE Issue Date

DRAWING TITLE
FOUNDATION PLAN

DRAWING NO.
S2.0.1

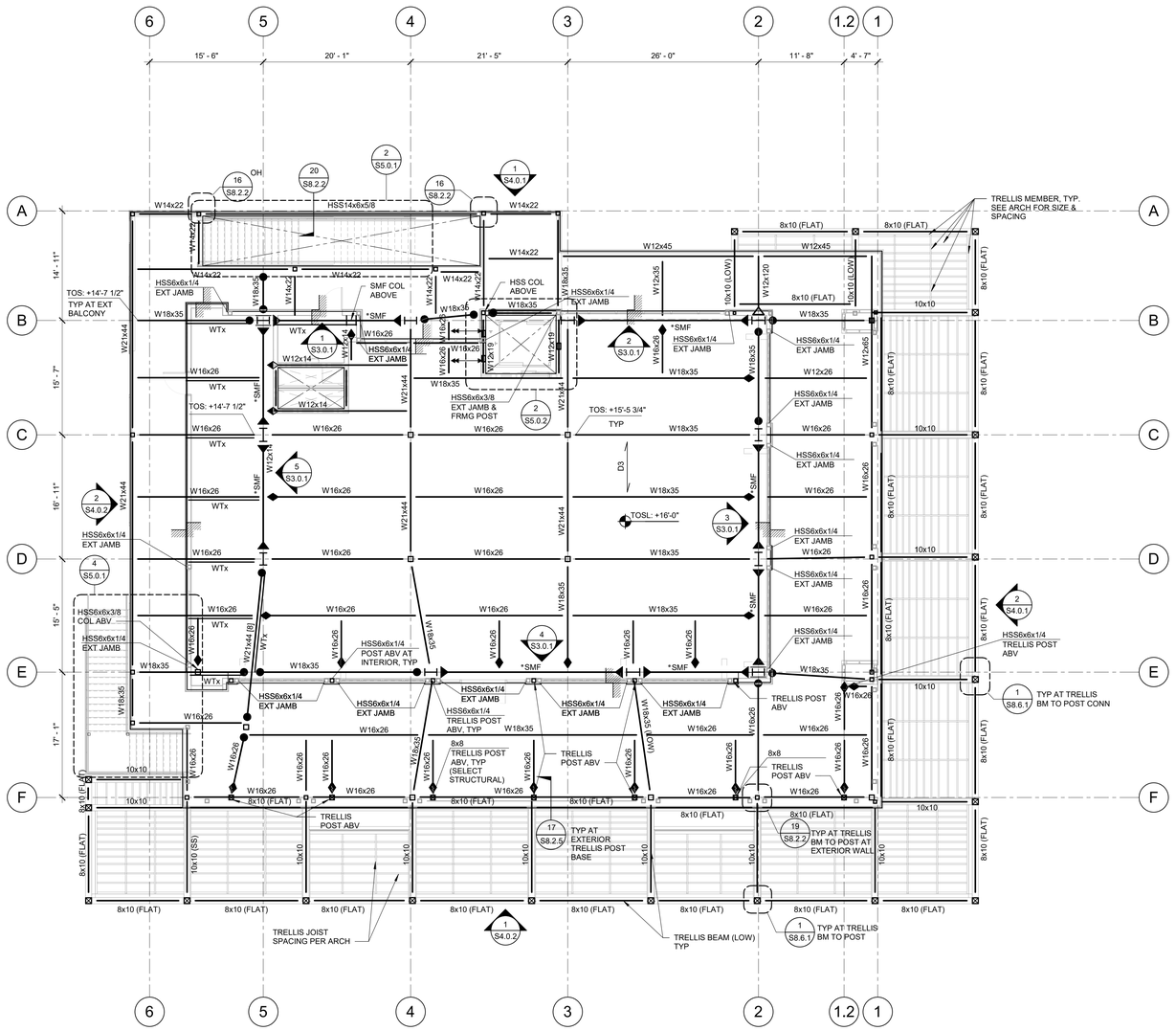

FRAMING PLAN NOTES

1. SEE THESE SHEETS FOR THE FOLLOWING INFORMATION:
   A. GENERAL NOTES: S0.0.1 THRU S0.0.3.
   B. ABBREVIATIONS AND SYMBOLS: S0.0.3.
   C. TYPICAL CONCRETE DETAILS: S8.0.1 THRU S8.0.3.
   D. TYPICAL STEEL DETAILS: S8.2.1 THRU S8.2.4.
   E. TYPICAL METAL STUD DETAILS: S8.4.1 THRU S8.4.5.
2. VERIFY ALL DIMENSIONS, ELEVATIONS FINISH SURFACES,SLOPE, DRAINS, DEPRESSIONS, CURBS, ETC, WITH ARCHITECTURAL DRAWINGS PRIOR TO START OF CONSTRUCTION.
3. SPECIFICATIONS AND DETAILING OF ALL WATERPROOFING AND DRAINAGE ITEMS, ALTHOUGH MAY BE INDICATED ON THE STRUCTURAL DRAWINGS FOR GENERAL INFORMATION PURPOSES ONLY, ARE THE DESIGN RESPONSIBILITY OF OTHERS.
4. SEE ARCHITECTURAL DRAWINGS FOR EDGE OF SLAB DIMENSIONS.
5. COORDINATE WITH MECHANICAL/PLUMBING/LANDSCAPE/ ELECTRICAL DRAWINGS FOR REQUIRED SLAB PENETRATIONS.
6. FOR FINISH FLOOR ELEVATIONS, SEE ARCHITECTURAL DRAWINGS.
7. REFER TO ARCHITECTURAL, MECHANICAL, PLUMBING, AND ELECTRICAL DRAWINGS FOR ADDITIONAL INFORMATION. IT IS THE CONTRACTOR'S RESPONSIBILITY TO IDENTIFY ANY DISCREPANCY PRIOR TO CONCRETE PLACEMENT AND NOTIFY THE ENGINEER FOR CORRECTIVE MEASURES.
8. REFER TO ARCHITECTURAL DRAWINGS FOR SLAB ELEVATIONS, DEPRESSIONS, SLOPES, OPENINGS, CURBS, DRAINS, TRENCHES, SLAB EDGE LOCATIONS, HOUSEKEEPING PADS, TIPS, SWALES, EXTERIOR SLAB ETC. AND FOR WALL OVERALL DIMENSIONS, LOCATION OF OPENINGS ETC. NOT INDICATED ON STRUCTURAL DRAWINGS.
9. CENTER COLUMNS ON GRID LINES UNLESS NOTED OTHERWISE.
10. ALL BEAMS ARE SPACED EQUALLY BETWEEN GRIDS OR ALONG SUPPORTING BEAM SPAN UNLESS NOTED OTHERWISE.
11. CONTRACTOR SHALL PROVIDE ALL MEASURES NECESSARY TO PROTECT THE STRUCTURE DURING CONSTRUCTION. SUCH MEASURES SHALL INCLUDE, BUT NOT BE LIMITED TO, BRACING, SHORING FOR LOADS DUE TO CONSTRUCTION EQUIPMENT, ETC. OBSERVATION VISITS TO THE SITE BY THE STRUCTURAL ENGINEER SHALL NOT INCLUDE INSPECTION OF THE ABOVE ITEMS.
12. ONLY LOAD BEARING WALLS AND SHEARWALLS ARE SHOWN. SEE ARCHITECTURAL DRAWINGS FOR NON-BEARING WALL LOCATIONS.

FRAMING PLAN SYMBOLS

- TOSL: X'-XX" — INDICATES TOP OF SLAB ELEVATION FROM 0'-0" CORRESPONDING TO DATUM ELEVATION OF 13'-0" PER CIVIL DRAWINGS.
- TOS: X'-XX" — INDICATES TOP OF STEEL ELEVATION FROM FINISH FLOOR (DATUM) ELEVATION 0'-0".
- INDICATES CHANGE IN SLAB ELEVATION.
- INDICATES CONCRETE CURB VERFY WITH ARCHITECTURAL DRAWINGS FOR LOCATIONS.
- INDICATES MOMENT RESISTING FRAME CONNECTION PER FRAME ELEVATION.
- INDICATES MOMENT CONNECTION AT CANTILEVERED FRAMING PER 13/ S8.2.1.
- INDICATES DRAG CONNECTION PER 1/ S8.2.3.
- INDICATES FULL HEIGHT STIFFENER CONNECTION PER 3/ S8.2.2.
- LO HI — INDICATES KICKER BRACE PER 1/ S8.2.2.
- *(MEMBER SIZE) — INDICATES MEMBER OR DETAIL IS PART OF THE SEISMIC FORCE RESISTING SYSTEM (SFRS). REFER TO SHEET S0.0.3 FOR SFRS NOTES.
- <#> — INDICATES AMOUNT OF UPWARD CAMBER (IN INCHES) AT MIDSPAN.
- [#] — INDICATES NUMBER OF HEADED STUDS. WHERE NUMBER OF STUDS IS NOT SHOWN, PROVIDE (1) STUD @ 12" OC, UNLESS NOTED [0].
- [#,#,#] — INDICATES NUMBER OF HEADED STUDS IN BETWEEN EACH FRAMING BAY. WHERE NUMBER OF STUDS IS NOT SHOWN, PROVIDE (1) STUD @ 12" OC, UNLESS NOTED [0].
- D# — INDICATES DECK TYPE AND SPAN DIRECTION. SEE 1/ S8.2.4.

LEVEL 2 FRAMING PLAN 1/8" = 1'-0" **1**

Zoning: CanningK 11/13/2024

Building&Safety: OCPWAzarvandB 12/22/2025

Permits: BNR21-0246, ELE21-0853, MEC21-0514, PLB21-0900

County of Orange - OC Public Works
OC Development Services
APPROVED
This set of plans and specifications must be kept on the job at all times. It is unlawful to make any changes or alterations to these plans without written permission from OC Public Works, OC Development Services of Orange County. The stamping of these plan specifications SHALL NOT be held to permit or be an approval of the violation of any provisions of any County Ordinance or State law.
Hind Tahtabaee
BUILDING OFFICIAL

SMS ARCHITECTS
100 Progress | Suite 250
Irvine, California 92618
949.757.3240 | www.sms-arch.com

CONSTANT
kpff
18400 Von Karman Ave., Suite 600
Irvine, CA 92612
O: 949.252.1022
F: 949.252.8082
www.kpff.com

PROJECT NAME
DANA POINT HARBOR COMMERCIAL CORE
BUILDING 12
1290 HARBOR WAY
DANA POINT, CA 92629

CLIENT
DANA POINT HARBOR PARTNERS
BURNHAM | WARD PROPERTIES
BWP

REGISTERED PROFESSIONAL ENGINEER ANDREW ENGLISH No. 5913 Exp. 12/31/25 STRUCTURAL STATE OF CALIFORNIA

No.	DATE	ISSUE
	02/10/2023	100% DESIGN DEVELOPMENT
	04/21/2023	COUNTY RESUBMITTAL
A	07/24/2023	CITY RESUBMITTAL

DRAWINGS AND WRITTEN MATERIAL APPEARING HEREIN CONSTITUTE ORIGINAL AND UNPUBLISHED WORK OF SMS ARCHITECTS AND MAY NOT BE DUPLICATED, USED OR DISCLOSED WITHOUT WRITTEN CONSENT OF THE ARCHITECT

PROJECT NO. 1900799
DATE Issue Date
DRAWING TITLE
LEVEL 2 FRAMING PLAN

DRAWING NO.
S2.0.2

BIM 360://1008/1900799 - R21 Dana Point Harbor Revitalization/1900799_DPH_Building 12-Struct.rvt

9/8/2023 10:40:42 AM

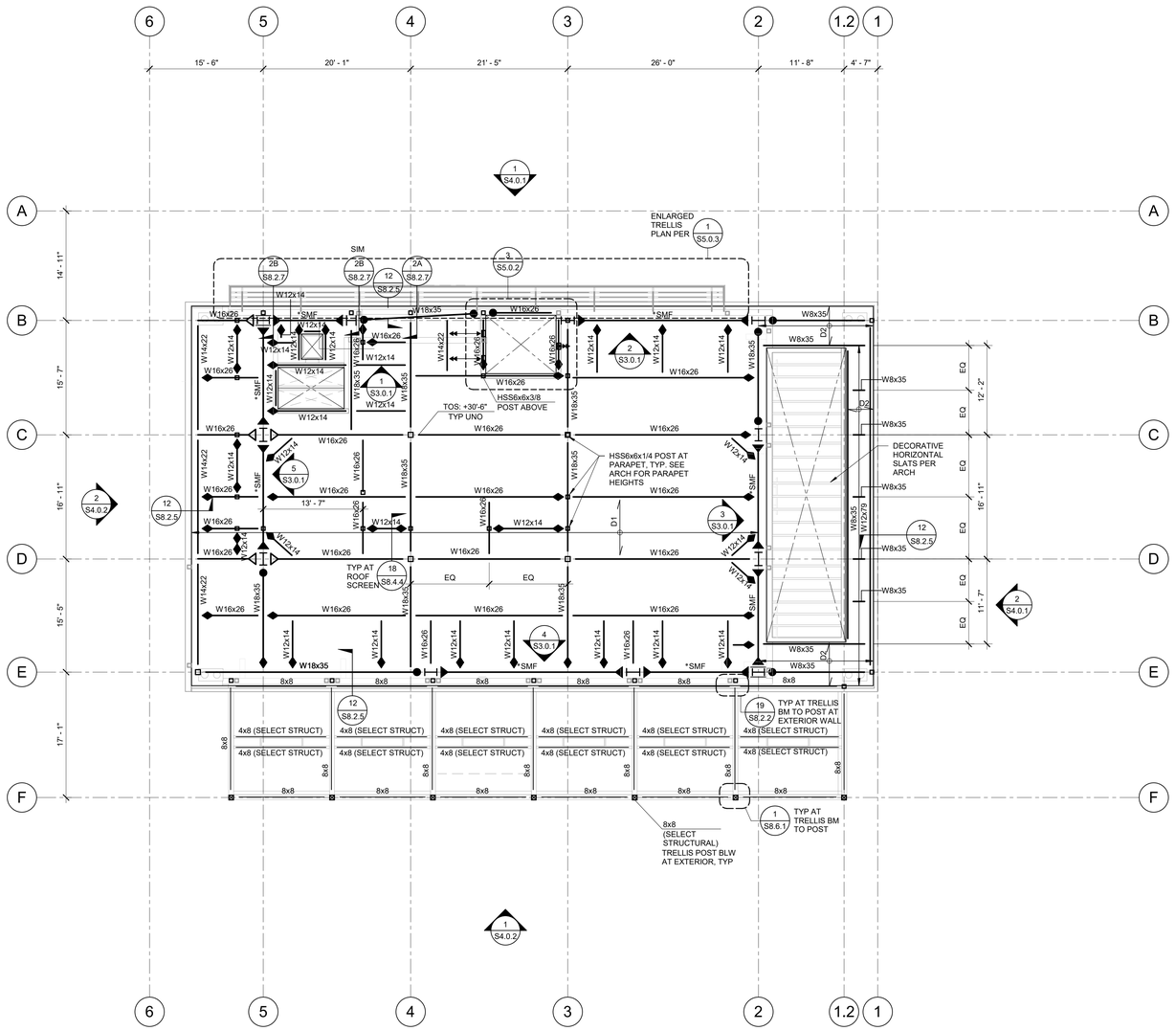
6
5
4
3
2
1.2
1
15' - 6"
20' - 1"
21' - 5"
26' - 0"
11' - 8"
4' - 7"
A
B
C
D
E
F
14' - 11"
15' - 7"
16' - 11"
15' - 5"
17' - 1"
1 S4.0.1
ENLARGED TRELLIS PLAN PER 1 S5.0.3
SIM
3 S5.0.2
2B S8.2.7
2A S8.2.7
12 S8.2.5
*SMF
W16x26
W18x35
W12x14
W14x22
W8x35
D2
EQ
12' - 2"
16' - 11"
11' - 7"
2 S4.0.1
1 S3.0.1
2 S3.0.1
3 S3.0.1
4 S3.0.1
5 S3.0.1
TOS: +30'-6" TYP UNO
HSS6x6x3/8 POST ABOVE
HSS6x6x1/4 POST AT PARAPET, TYP. SEE ARCH FOR PARAPET HEIGHTS
DECORATIVE HORIZONTAL SLATS PER ARCH
W8x35 W10x79
D1
13' - 7"
2 S4.0.2
12 S8.2.5
TYP AT ROOF SCREEN 18 S8.4.4
W12x14
W18x35
W16x26
W12x14
W12x14
W18x35
W16x26
W12x14
W12x14
W18x35
W16x26
W12x14

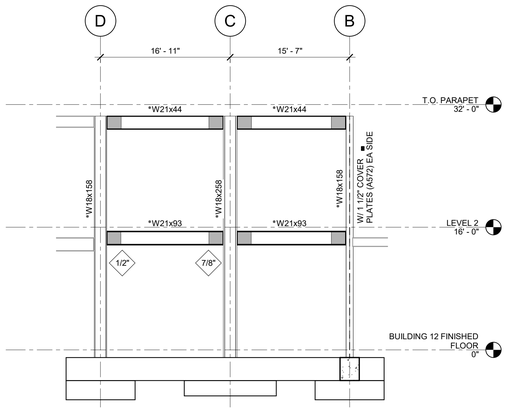

MOMENT FRAME ELEVATION ALONG GRID 5 | 1/8" = 1'-0" | **5**

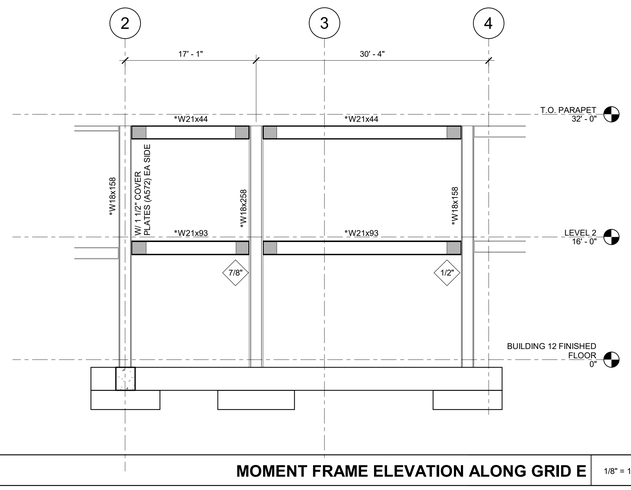

MOMENT FRAME ELEVATION ALONG GRID E | 1/8" = 1'-0" | **4**

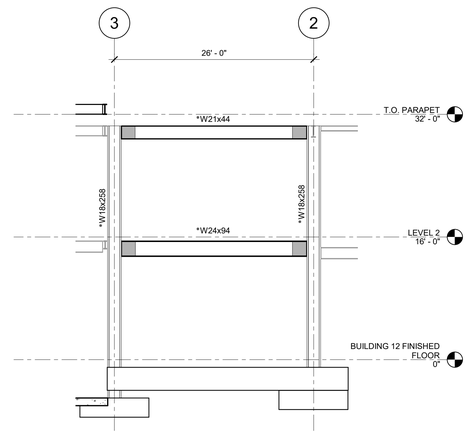

MOMENT FRAME ELEVATION ALONG GRID B | 1/8" = 1'-0" | **2**

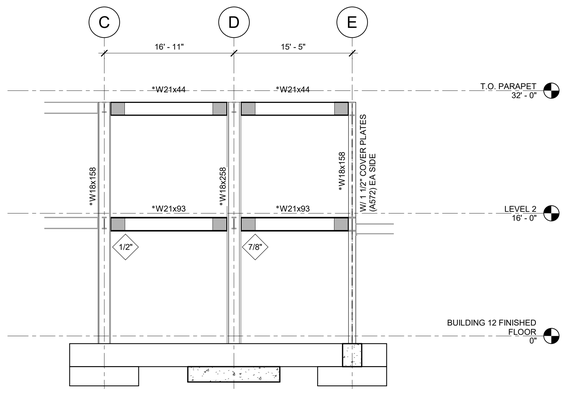

MOMENT FRAME ELEVATIONALONG GRID 2 | 1/8" = 1'-0" | **3**

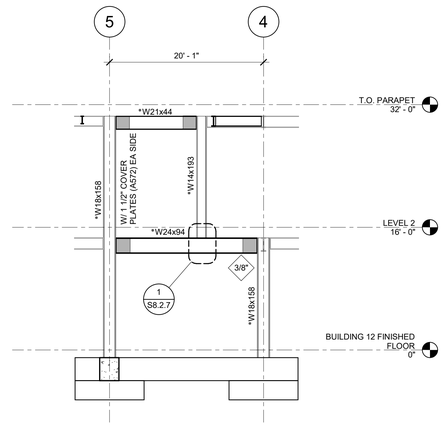

MOMENT FRAME ELEVATION ALONG GRID B | 1/8" = 1'-0" | **1**

MOMENT FRAME ELEVATION NOTES:

1. REFER TO DETAIL 1/ S8.2.6 FOR MOMENT RESISTING FRAME CONNECTION.
2. REFER TO DETAIL -/ --- FOR FRAME BASE CONNECTION.
3. REFER TO FOUNDATION PLAN FOR TOP OF FOOTING ELEVATION.
4. ◇ # — INDICATES DOUBLER PLATE THICKNESS AT PANEL ZONE PER DETAIL 9/ S8.2.6.
5. ▩ — INDICATES PROTECTED ZONE OF MOMENT FRAME BEAM PER DETAIL 1/ S8.2.6.
6. * (MEMBER SIZE) INDICATES MEMBER/ CONNECTION DETAIL IS PART OF SEISMIC FORCE RESISTING SYSTEM (SFRS). REFER TO SHEET S0.0.3 FOR SFRS NOTES.

Zoning: CanningK 11/13/2024

Building&Safety: OCPWAzarvandB 12/22/2025

Permits: BNR21-0246, ELE21-0853, MEC21-0514, PLB21-0900

County of Orange - OC Public Works
OC Development Services
APPROVED

This set of plans and specifications must be kept on the job at all times. It is unlawful to make any changes or alterations to these plans without written permission from OC Public Works, OC Development Services of Orange County. The stamping of these plan specifications SHALL NOT be held to permit or be an approval of the violation of any provisions of any County Ordinance or State law.

Hind Tahetbsani
BUILDING OFFICIAL

SMSARCHITECTS
100 Progress | Suite 250
Irvine, California 92618
949.757.3240 | www.sms-arch.com

CONSTANT
kpff
18400 Von Karman Ave., Suite 600
Irvine, CA 92612
O: 949.252.1022
F: 949.252.8082
www.kpff.com

DANA POINT HARBOR PARTNERS

PROJECT NAME
DANA POINT HARBOR COMMERCIAL CORE
BUILDING 12
1290 HARBOR WAY
DANA POINT, CA 92629

CLIENT
BURNHAM|WARD PROPERTIES
BWP

REGISTERED PROFESSIONAL ENGINEER
CHRISTOPHER ANDREW SHANNON
No. 5913
Exp. 12/31/26
STRUCTURAL
STATE OF CALIFORNIA

No.	DATE	ISSUE
	02/10/2023	100% DESIGN DEVELOPMENT
	04/21/2023	COUNTY RESUBMITTAL
A	07/24/2023	CITY RESUBMITTAL

DRAWINGS AND WRITTEN MATERIAL APPEARING HEREIN CONSTITUTE ORIGINAL AND UNPUBLISHED WORK OF SMS ARCHITECTS AND MAY NOT BE DUPLICATED, USED OR DISCLOSED WITHOUT WRITTEN CONSENT OF THE ARCHITECT

PROJECT NO. 1900799

DATE Issue Date

DRAWING TITLE
SPECIAL MOMENT FRAME ELEVATIONS

DRAWING NO.
S3.0.1

BIM 360://1008/1900799_R21 Dana Point Harbor Revitalization/1900799_DPH_Building 12-Struct.rvt
9/8/2023 10:40:52 AM

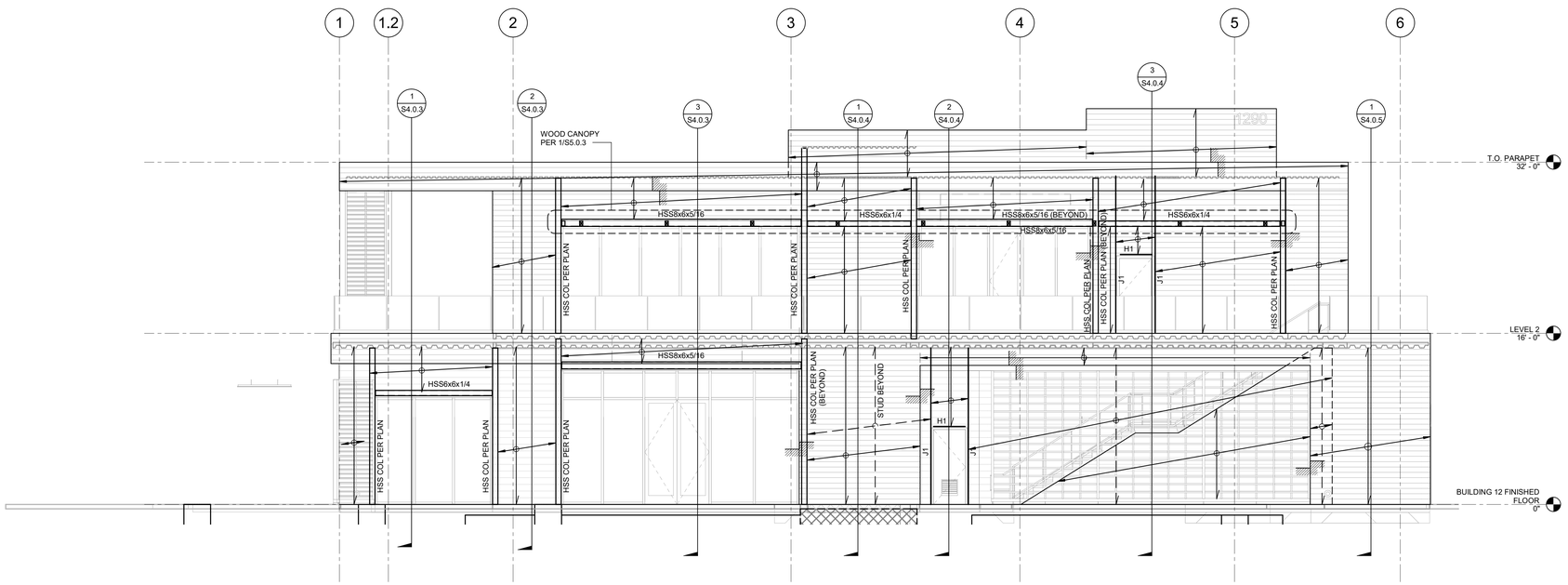

NORTH ELEVATION 3/16" = 1'-0" 1

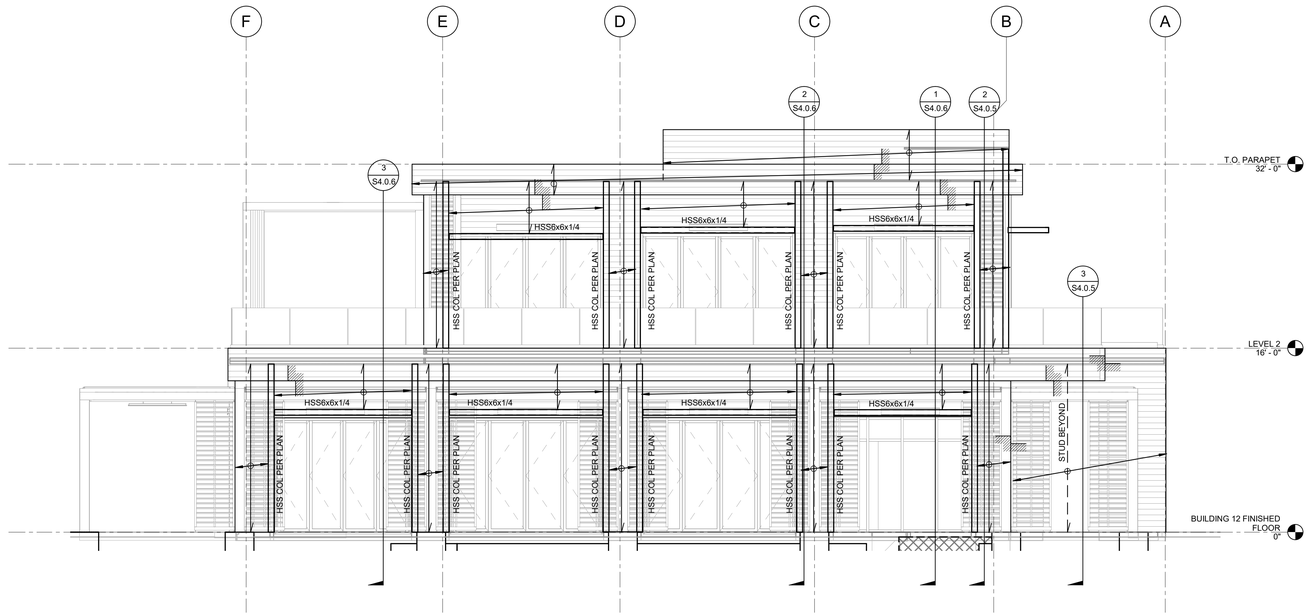

EAST ELEVATION 3/16" = 1'-0" 2

Zoning: CanningK 11/13/2024

Building&Safety: OCPWAzarvandB 12/22/2025

Permits: BNR21-0246, ELE21-0853, MEC21-0514, PLB21-0900

County of Orange - OC Public Works
OC Development Services
APPROVED

This set of plans and specifications must be kept on the job at all times. It is unlawful to make any changes or alterations to these plans without written permission from OC Public Works, OC Development Services of Orange County. The stamping of these plan specifications SHALL NOT be held to permit or be an approval of the violation of any provisions of any County Ordinance or State law.

Hadi Tabatabaee
BUILDING OFFICIAL

EXTERIOR WALL ELEVATION NOTES :

1. SEE ARCH DRAWINGS FOR FINISHES AND DIMENSIONS.
2. FOR GENERAL NOTES SEE SHEETS S0.0.1 THRU S0.0.3.
3. FOR ABBREVIATIONS AND SYMBOLS SEE SHEET S0.0.3.
4. FOR TYPICAL METAL STUD DETAILS SEE SHEETS S8.4.1 THRU S8.4.4.
5. ST- INDICATES EXTERIOR WALL STUD SIZE PER SCHEDULE.
6. H- INDICATES TYPE OF HEADER PER SCHEDULE. FOR HEADER ATTACHMENT TO JAMB SEE DETAIL , UNO.
7. J- INDICATES TYPE OF JAMB PER SCHEDULE. FOR JAMB ATTACHMENT TO EACH LEVEL, SEE DETAIL , UNO.
8. ALL STUDS WITH THICKNESS EQUAL OR GREATER THAN 54 MIL (16GA) SHALL BE 50 KSI.
9. INDICATES METAL STUD SPAN DIRECTION. ST-1 TYP, UNO.
10. WHERE EXTERIOR WALL STUD SIZE IS NOT INDICATED ON PLANS OR ELEVATIONS, PROVIDE 16 GA STUDS W/ 1 5/8" FLANGE @ 16" OC. SEE ARCHITECTURAL DRAWINGS FOR REQUIRED DEPTH OF STUD TO MATCH WALL THICKNESS.

EXTERIOR WALL STUD SCHEDULE	
MARK	STUD SIZE
ST-1	600S162-54 @16" OC

JAMB SCHEDULE	
MARK	STUD SIZE
J1	(2) 600S137-54

HEADER SCHEDULE		
MARK	TRACK SIZE	STUD SIZE
H1	600T150-54	(2) 600S162-54

SMSARCHITECTS
100 Progress | Suite 250
Irvine, California 92618
949.757.3240 | www.sms-arch.com

CONSTANT
kpff
18400 Von Karman Ave., Suite 600
Irvine, CA 92612
O: 949.252.1022
F: 949.252.8082
www.kpff.com

DANA POINT HARBOR PARTNERS

PROJECT NAME
DANA POINT HARBOR COMMERCIAL CORE
BUILDING 12
1290 HARBOR WAY
DANA POINT, CA 92629

CLIENT
BWP BURNHAM|WARD PROPERTIES

REGISTERED PROFESSIONAL ENGINEER
CHRISTOPHER ANDREW DOMINICS
No. 5913
Exp. 12/31/25
STRUCTURAL
STATE OF CALIFORNIA

No.	DATE	ISSUE
	02/10/2023	100% DESIGN DEVELOPMENT
	04/21/2023	COUNTY RESUBMITTAL
A	07/24/2023	CITY RESUBMITTAL

DRAWINGS AND WRITTEN MATERIAL APPEARING HEREIN CONSTITUTE ORIGINAL AND UNPUBLISHED WORK OF SMS ARCHITECTS AND MAY NOT BE DUPLICATED, USED OR DISCLOSED WITHOUT WRITTEN CONSENT OF THE ARCHITECT

PROJECT NO. 1900799
DATE Issue Date
DRAWING TITLE
EXTERIOR WALL ELEVATIONS
DRAWING NO.
S4.0.1

9/8/2023 10:40:58 AM

BIM 360://10081900799 - R21 Dana Point Harbor Revitalization/1900799_DPH_Building 12-Struct.rvt

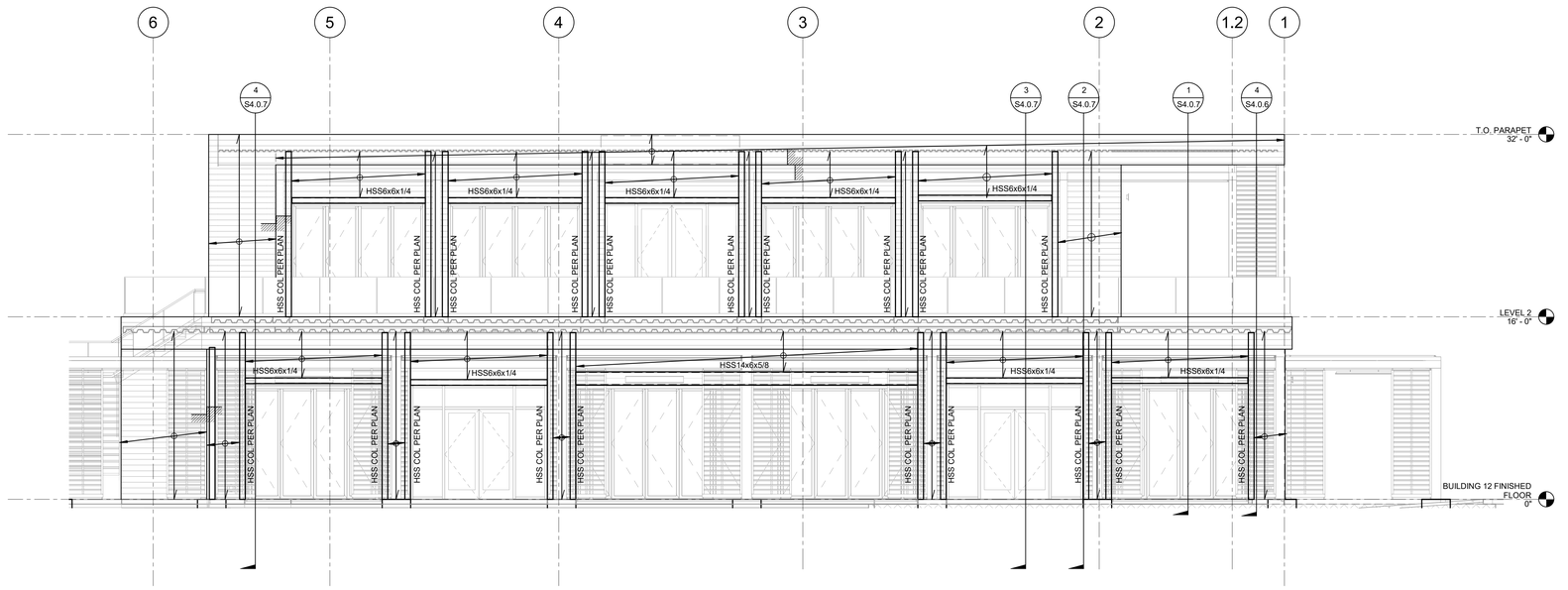

SOUTH ELEVATION 3/16" = 1'-0" 1

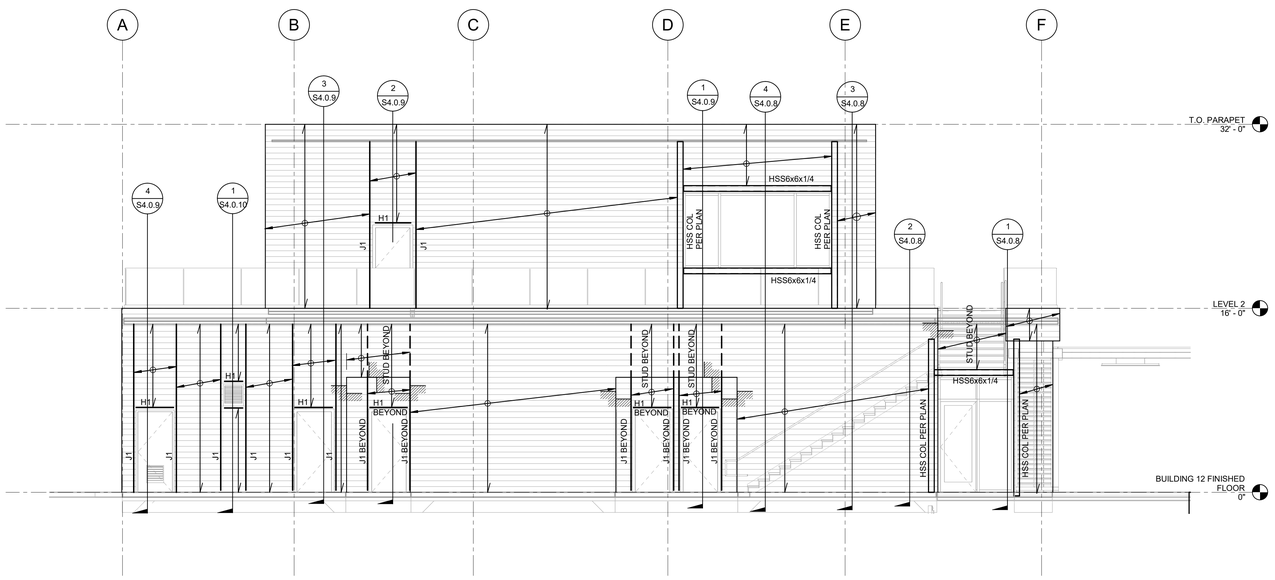

WEST ELEVATION 3/16" = 1'-0" 2

Zoning: CanningK 11/13/2024

Building&Safety: OCPWAzarvandB 12/22/2025

Permits: BNR21-0246, ELE21-0853, MEC21-0514, PLB21-0900

County of Orange - OC Public Works
OC Development Services
APPROVED

This set of plans and specifications must be kept on the job at all times. It is unlawful to make any changes or alterations to these plans without written permission from OC Public Works, OC Development Services of Orange County. The stamping of these plan specifications SHALL NOT be held to permit or be an approval of the violation of any provisions of any County Ordinance or State law.

Hadi Tabatabaee
BUILDING OFFICIAL

EXTERIOR WALL ELEVATION NOTES :

1. SEE ARCH DRAWINGS FOR FINISHES AND DIMENSIONS.
2. FOR GENERAL NOTES SEE SHEETS S0.0.1 THRU S0.0.3.
3. FOR ABBREVIATIONS AND SYMBOLS SEE SHEET S0.0.3.
4. FOR TYPICAL METAL STUD DETAILS SEE SHEETS S8.4.1 THRU S8.4.4.
5. ST- INDICATES EXTERIOR WALL STUD SIZE PER SCHEDULE.
6. H- INDICATES TYPE OF HEADER PER SCHEDULE. FOR HEADER ATTACHMENT TO JAMB SEE DETAIL , UNO.
7. J- INDICATES TYPE OF JAMB PER SCHEDULE. FOR JAMB ATTACHMENT TO EACH LEVEL, SEE DETAIL , UNO.
8. ALL STUDS WITH THICKNESS EQUAL OR GREATER THAN 54 MIL (16GA) SHALL BE 50 KSI.
9. INDICATES METAL STUD SPAN DIRECTION. ST-1 TYP, UNO.
10. WHERE EXTERIOR WALL STUD SIZE IS NOT INDICATED ON PLANS OR ELEVATIONS, PROVIDE 16 GA STUDS W/ 1 5/8" FLANGE @ 16" OC. SEE ARCHITECTURAL DRAWINGS FOR REQUIRED DEPTH OF STUD TO MATCH WALL THICKNESS.

EXTERIOR WALL STUD SCHEDULE	
MARK	STUD SIZE
ST-1	600S162-54 @16" OC

JAMB SCHEDULE	
MARK	STUD SIZE
J1	(2) 600S137-54

HEADER SCHEDULE		
MARK	TRACK SIZE	STUD SIZE
H1	600T150-54	(2) 600S162-54

SMSARCHITECTS
100 Progress | Suite 250
Irvine, California 92618
949.757.3240 | www.sms-arch.com

CONSTANT
kpff
18400 Von Karman Ave., Suite 600
Irvine, CA 92612
O: 949.252.1022
F: 949.252.8082
www.kpff.com

DANA POINT HARBOR PARTNERS

PROJECT NAME
DANA POINT HARBOR COMMERCIAL CORE
BUILDING 12
1290 HARBOR WAY
DANA POINT, CA 92629

CLIENT
BURNHAM|WARD PROPERTIES

REGISTERED PROFESSIONAL ENGINEER
CHRISTOPHER ANDREW DOMINAS
No. 5913
Exp. 12/31/25
STRUCTURAL
STATE OF CALIFORNIA

No.	DATE	ISSUE
	02/10/2023	100% DESIGN DEVELOPMENT
	04/21/2023	COUNTY RESUBMITTAL
A	07/24/2023	CITY RESUBMITTAL

DRAWINGS AND WRITTEN MATERIAL APPEARING HEREIN CONSTITUTE ORIGINAL AND UNPUBLISHED WORK OF SMS ARCHITECTS AND MAY NOT BE DUPLICATED, USED OR DISCLOSED WITHOUT WRITTEN CONSENT OF THE ARCHITECT

PROJECT NO. 1900799
DATE Issue Date
DRAWING TITLE
EXTERIOR WALL ELEVATIONS
DRAWING NO.
S4.0.2

9/8/2023 10:41:09 AM

BIM 360://1008/1900799 - R21 Dana Point Harbor Revitalization/1900799_DPH_Building 12-Struct.rvt

Zoning: CanningK 11/13/2024

Building&Safety: OCPWAzarvandB 12/22/2025

Permits: BNR21-0246, ELE21-0853, MEC21-0514, PLB21-0900

County of Orange - OC Public Works
OC Development Services
APPROVED

This set of plans and specifications must be kept on the job at all times. It is unlawful to make any changes or alterations to these plans without written permission from OC Public Works, OC Development Services of Orange County. The stamping of these plan specifications SHALL NOT be held to permit or be an approval of the violation of any provisions of any County Ordinance or State law.

Hadi Tabatabaee
BUILDING OFFICIAL

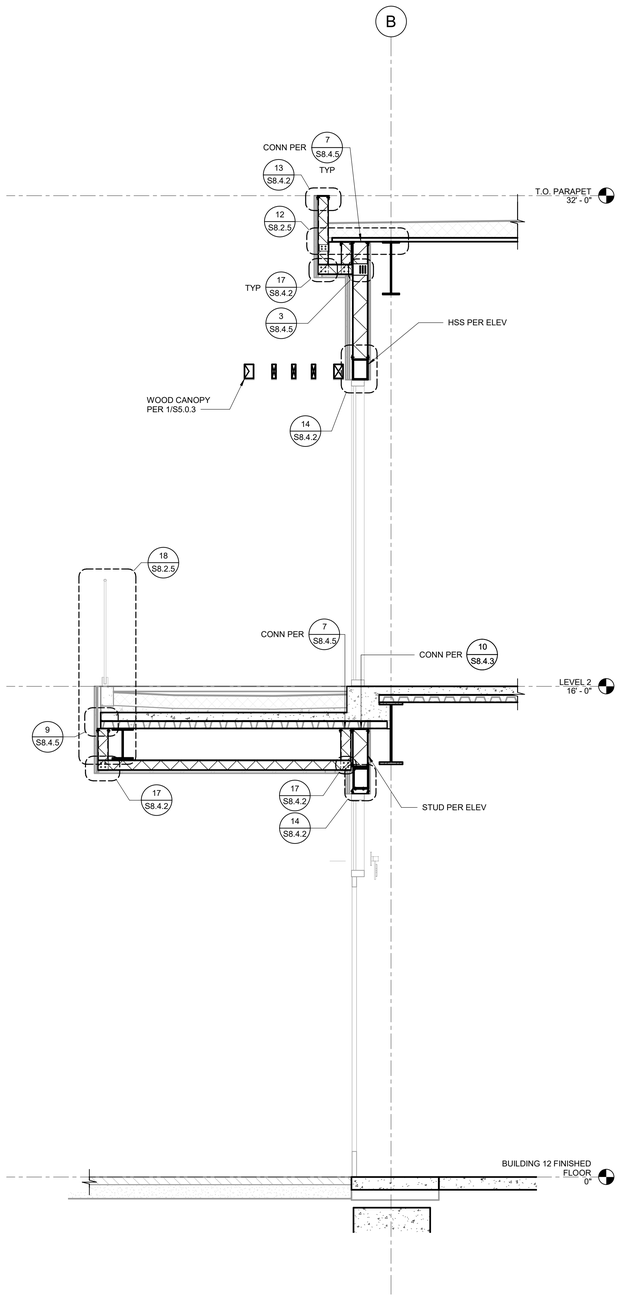

NOTE: FOR TYPICAL SOFFIT FRAMING AND BRACING SEE 15/ S8.4.4.

WALL SECTION 1/2" = 1'-0" 3

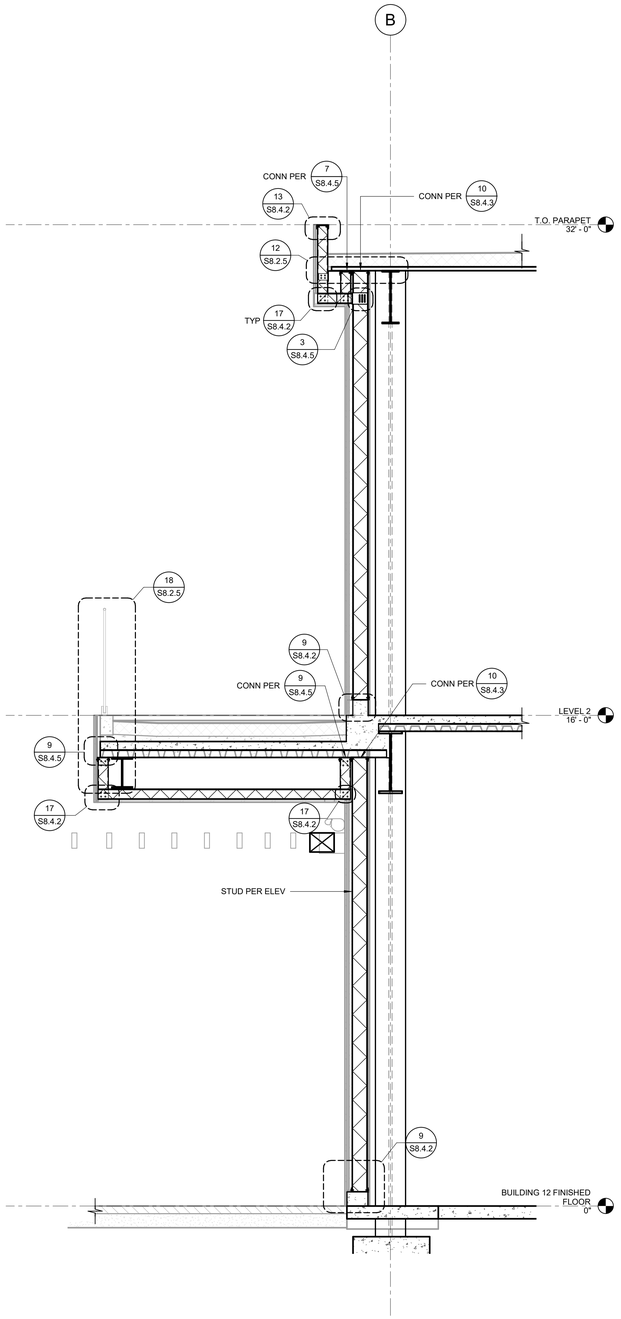

NOTE: FOR TYPICAL SOFFIT FRAMING AND BRACING SEE 15/ S8.4.4.

WALL SECTION 1/2" = 1'-0" 2

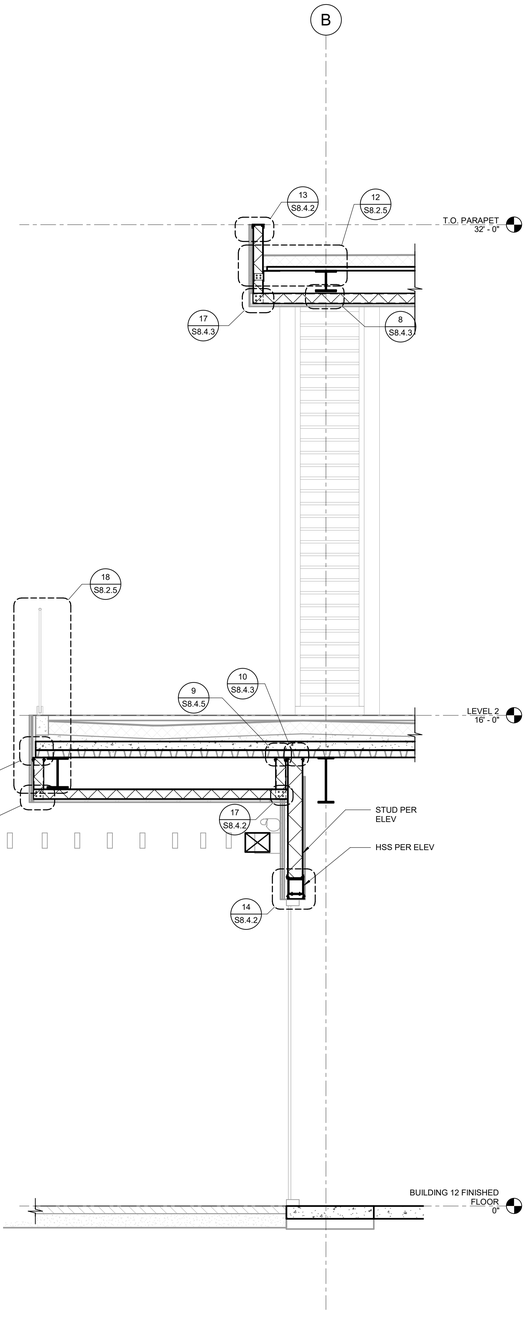

NOTE: FOR TYPICAL SOFFIT FRAMING AND BRACING SEE 15/ S8.4.4.

WALL SECTION 1/2" = 1'-0" 1

SMSARCHITECTS
100 Progress | Suite 250
Irvine, California 92618
949.757.3240 | www.sms-arch.com

CONSTANT
kpff
18400 Von Karman Ave., Suite 600
Irvine, CA 92612
O: 949.252.1022
F: 949.252.8082
www.kpff.com

DANA POINT HARBOR PARTNERS

PROJECT NAME
DANA POINT HARBOR COMMERCIAL CORE
BUILDING 12
1290 HARBOR WAY
DANA POINT, CA 92629

CLIENT
BWP BURNHAM|WARD PROPERTIES

REGISTERED PROFESSIONAL ENGINEER
CHRISTOPHER ANDREW DOMINA
No. 5913
Exp. 12/31/25
STRUCTURAL
STATE OF CALIFORNIA

No.	DATE	ISSUE
	02/10/2023	100% DESIGN DEVELOPMENT
	04/21/2023	COUNTY RESUBMITTAL
A	07/24/2023	CITY RESUBMITTAL

DRAWINGS AND WRITTEN MATERIAL APPEARING HEREIN CONSTITUTE ORIGINAL AND UNPUBLISHED WORK OF SMS ARCHITECTS AND MAY NOT BE DUPLICATED, USED OR DISCLOSED WITHOUT WRITTEN CONSENT OF THE ARCHITECT

PROJECT NO. 1900799
DATE Issue Date
DRAWING TITLE
WALL SECTIONS

DRAWING NO.
S4.0.3

9/8/2023 10:41:15 AM

BIM 360://1008/1900799 - R21 Dana Point Harbor Revitalization/1900799_DPH_Building 12-Struct.rvt

Zoning: CanningK 11/13/2024

Building&Safety: OCPWAzarvandB 12/22/2025

Permits: BNR21-0246, ELE21-0853, MEC21-0514, PLB21-0900

County of Orange - OC Public Works
OC Development Services
APPROVED

This set of plans and specifications must be kept on the job at all times. It is unlawful to make any changes or alterations to these plans without written permission from OC Public Works, OC Development Services of Orange County. The stamping of these plan specifications SHALL NOT be held to permit or be an approval of the violation of any provisions of any County Ordinance or State law.

Hadi Tabatabaee
BUILDING OFFICIAL

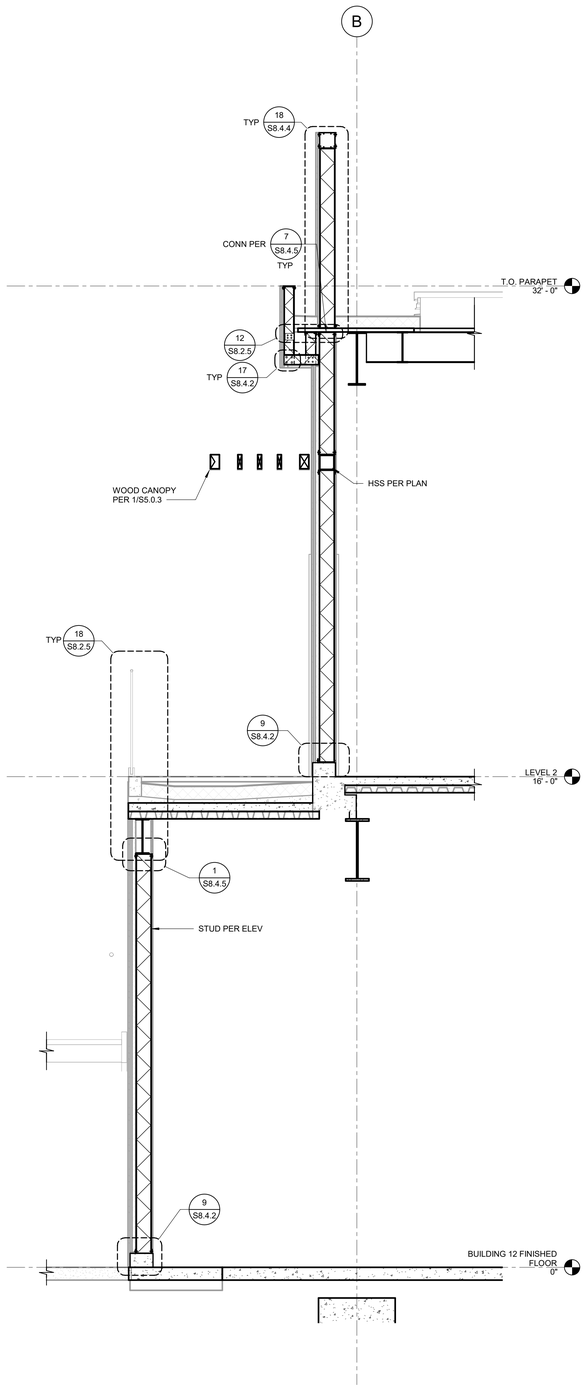

NOTE:
FOR TYPICAL SOFFIT FRAMING AND BRACING SEE 15/ S8.4.4.

WALL SECTION 1/2" = 1'-0" 3

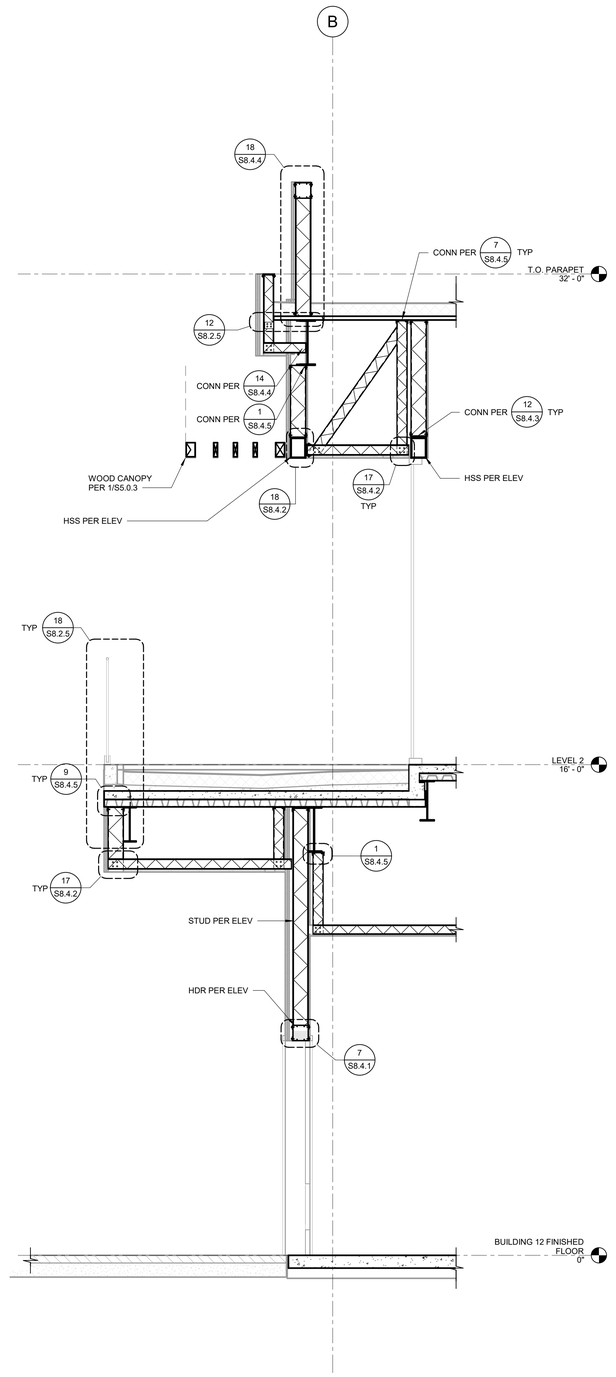

NOTE:
FOR TYPICAL SOFFIT FRAMING AND BRACING SEE 15/ S8.4.4.

WALL SECTION 1/2" = 1'-0" 2

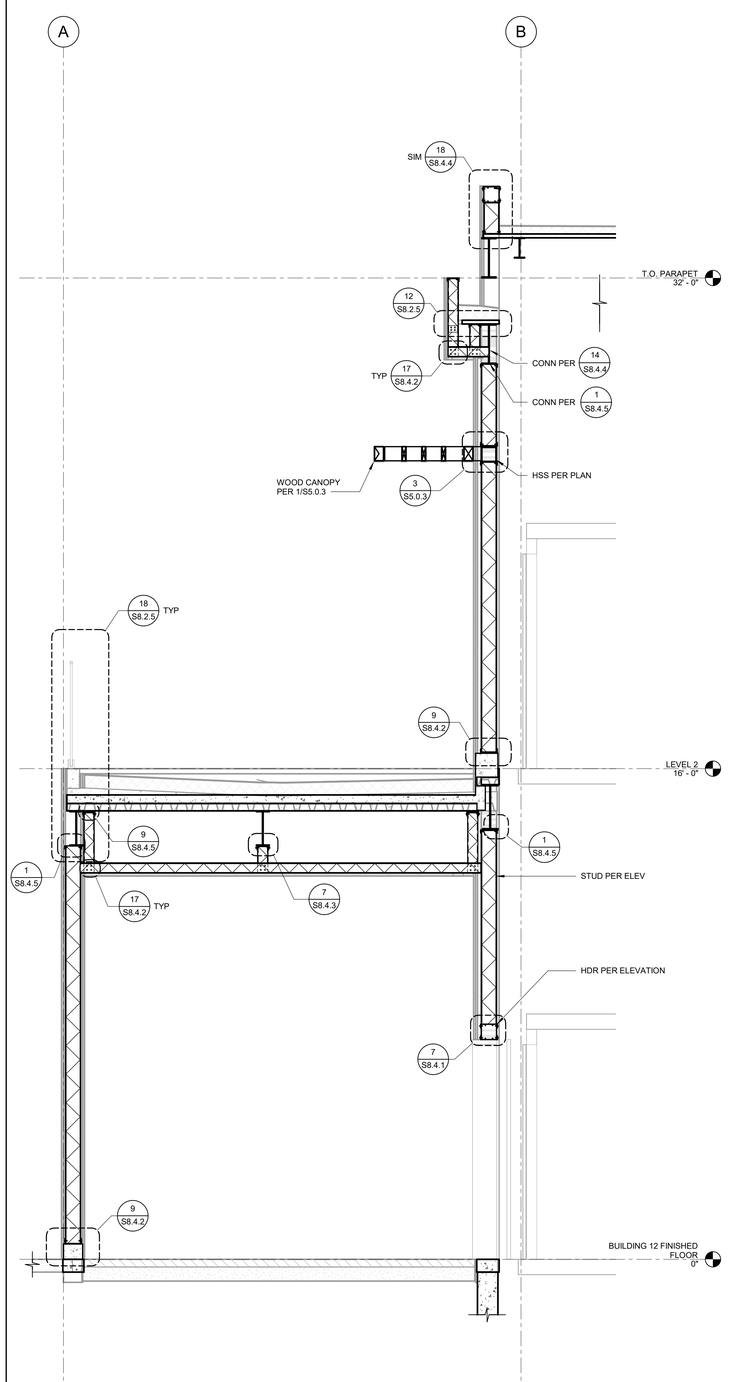

NOTE:
FOR TYPICAL SOFFIT FRAMING AND BRACING SEE 15/ S8.4.4.

WALL SECTION 1/2" = 1'-0" 1

SMSARCHITECTS
100 Progress | Suite 250
Irvine, California 92618
949.757.3240 | www.sms-arch.com

CONSTANT
kpff
18400 Von Karman Ave., Suite 600
Irvine, CA 92612
O: 949.252.1022
F: 949.252.8082
www.kpff.com

DANA POINT HARBOR PARTNERS

PROJECT NAME
DANA POINT HARBOR COMMERCIAL CORE
BUILDING 12
1290 HARBOR WAY
DANA POINT, CA 92629

CLIENT
BWP BURNHAM|WARD PROPERTIES

REGISTERED PROFESSIONAL ENGINEER
CHRISTOPHER ANDREW DOMINAS
No. 5913
Exp. 12/31/25
STRUCTURAL
STATE OF CALIFORNIA

No.	DATE	ISSUE
	02/10/2023	100% DESIGN DEVELOPMENT
	04/21/2023	COUNTY RESUBMITTAL
A	07/24/2023	CITY RESUBMITTAL

DRAWINGS AND WRITTEN MATERIAL APPEARING HEREIN CONSTITUTE ORIGINAL AND UNPUBLISHED WORK OF SMS ARCHITECTS AND MAY NOT BE DUPLICATED, USED OR DISCLOSED WITHOUT WRITTEN CONSENT OF THE ARCHITECT

PROJECT NO. 1900799
DATE Issue Date
DRAWING TITLE
WALL SECTIONS

DRAWING NO.
S4.0.4

9/8/2023 10:41:20 AM

BIM 360://10081900799 - R21 Dana Point Harbor Revitalization/1900799_DPH_Building 12-Struct.rvt

Zoning: CanningK 11/13/2024

Building&Safety: OCPWAzarvandB 12/22/2025

Permits: BNR21-0246, ELE21-0853, MEC21-0514, PLB21-0900

County of Orange - OC Public Works
OC Development Services
APPROVED

This set of plans and specifications must be kept on the job at all times. It is unlawful to make any changes or alterations to these plans without written permission from OC Public Works, OC Development Services of Orange County. The stamping of these plan specifications SHALL NOT be held to permit or be an approval of the violation of any provisions of any County Ordinance or State law.

Hind Tahtabaee
BUILDING OFFICIAL

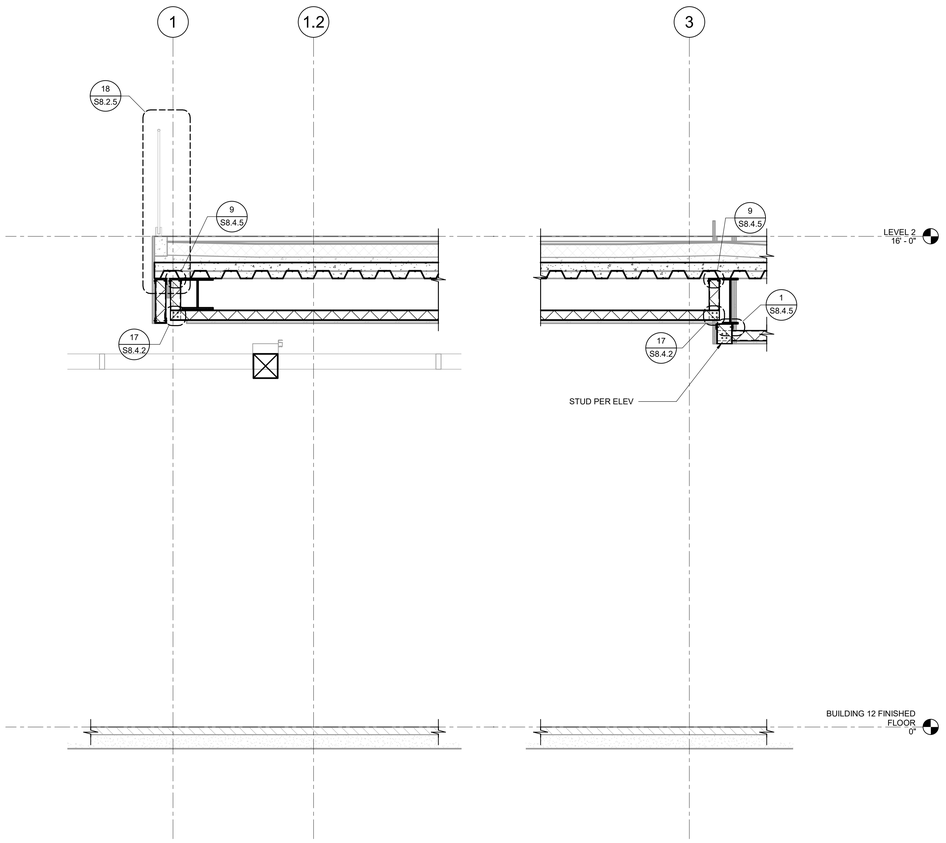

NOTE:
FOR TYPICAL SOFFIT FRAMING AND BRACING SEE 15/ S8.4.4.

WALL SECTION 1/2" = 1'-0" 3

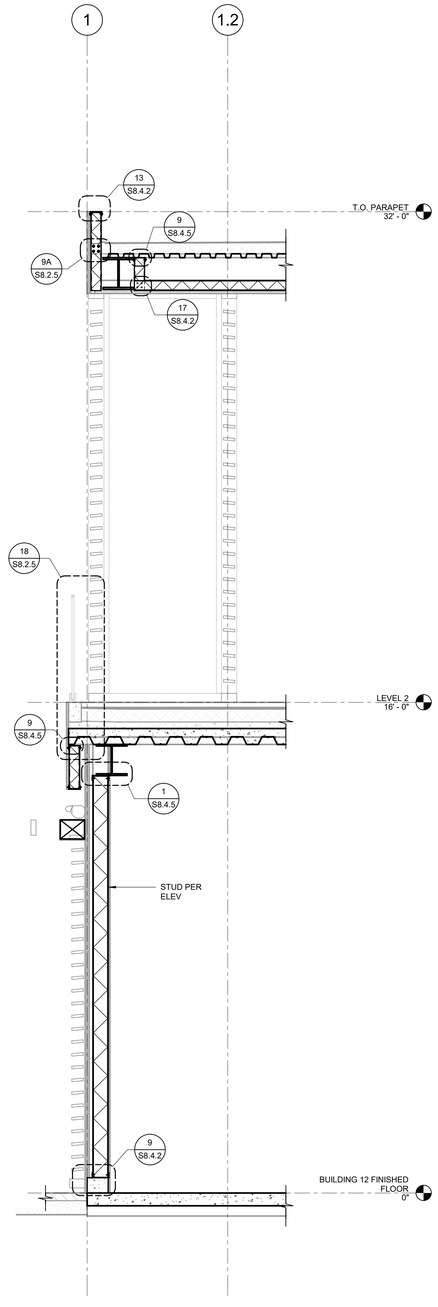

NOTE:
FOR TYPICAL SOFFIT FRAMING AND BRACING SEE 15/ S8.4.4.

WALL SECTION 1/2" = 1'-0" 2

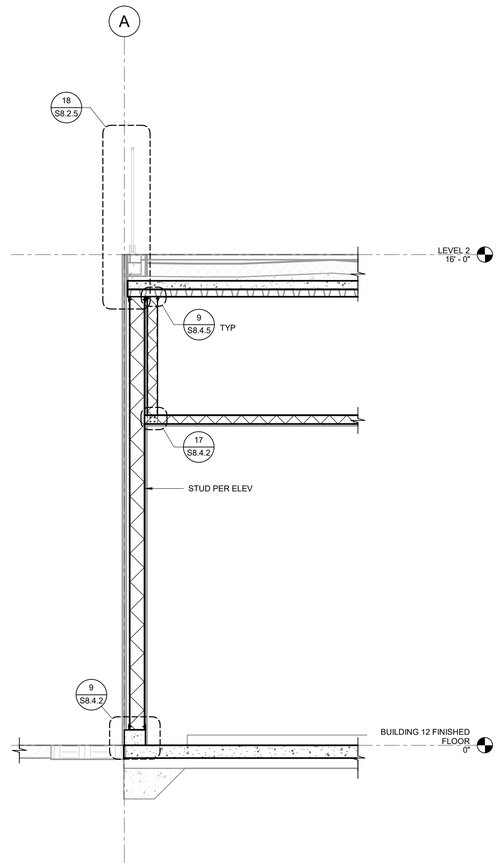

NOTE:
FOR TYPICAL SOFFIT FRAMING AND BRACING SEE 15/ S8.4.4.

WALL SECTION 1/2" = 1'-0" 1

SMSARCHITECTS
100 Progress | Suite 250
Irvine, California 92618
949.757.3240 | www.sms-arch.com

CONSTANT
kpff
18400 Von Karman Ave., Suite 600
Irvine, CA 92612
O: 949.252.1022
F: 949.252.8082
www.kpff.com

DANA POINT HARBOR PARTNERS

PROJECT NAME
DANA POINT HARBOR COMMERCIAL CORE
BUILDING 12
1290 HARBOR WAY
DANA POINT, CA 92629

CLIENT
BWP PROPERTIES
BURNHAM | WARD

CHRISTOPHER ANDREW SMITH
No. 5913
Exp. 12/31/25
STRUCTURAL
STATE OF CALIFORNIA

No.	DATE	ISSUE
	02/10/2023	100% DESIGN DEVELOPMENT
	04/21/2023	COUNTY RESUBMITTAL
A	07/24/2023	CITY RESUBMITTAL

DRAWINGS AND WRITTEN MATERIAL APPEARING HEREIN CONSTITUTE ORIGINAL AND UNPUBLISHED WORK OF SMS ARCHITECTS AND MAY NOT BE DUPLICATED, USED OR DISCLOSED WITHOUT WRITTEN CONSENT OF THE ARCHITECT

PROJECT NO 1900799

DATE Issue Date

DRAWING TITLE
WALL SECTIONS

DRAWING NO
S4.0.5

BIM 360://1008 1900799 - R21 Dana Point Harbor Revitalization/1900799_DPH_Building 12-Struct.rvt

9/8/2023 10:41:25 AM

Zoning: CanningK 11/13/2024

Building&Safety: OCPWAzarvandB 12/22/2025

Permits: BNR21-0246, ELE21-0853, MEC21-0514, PLB21-0900

County of Orange - OC Public Works
OC Development Services
APPROVED

This set of plans and specifications must be kept on the job at all times. It is unlawful to make any changes or alterations to these plans without written permission from OC Public Works, OC Development Services of Orange County. The stamping of these plan specifications SHALL NOT be held to permit or be an approval of the violation of any provisions of any County Ordinance or State law.

Hadi Tabatabaee
BUILDING OFFICIAL

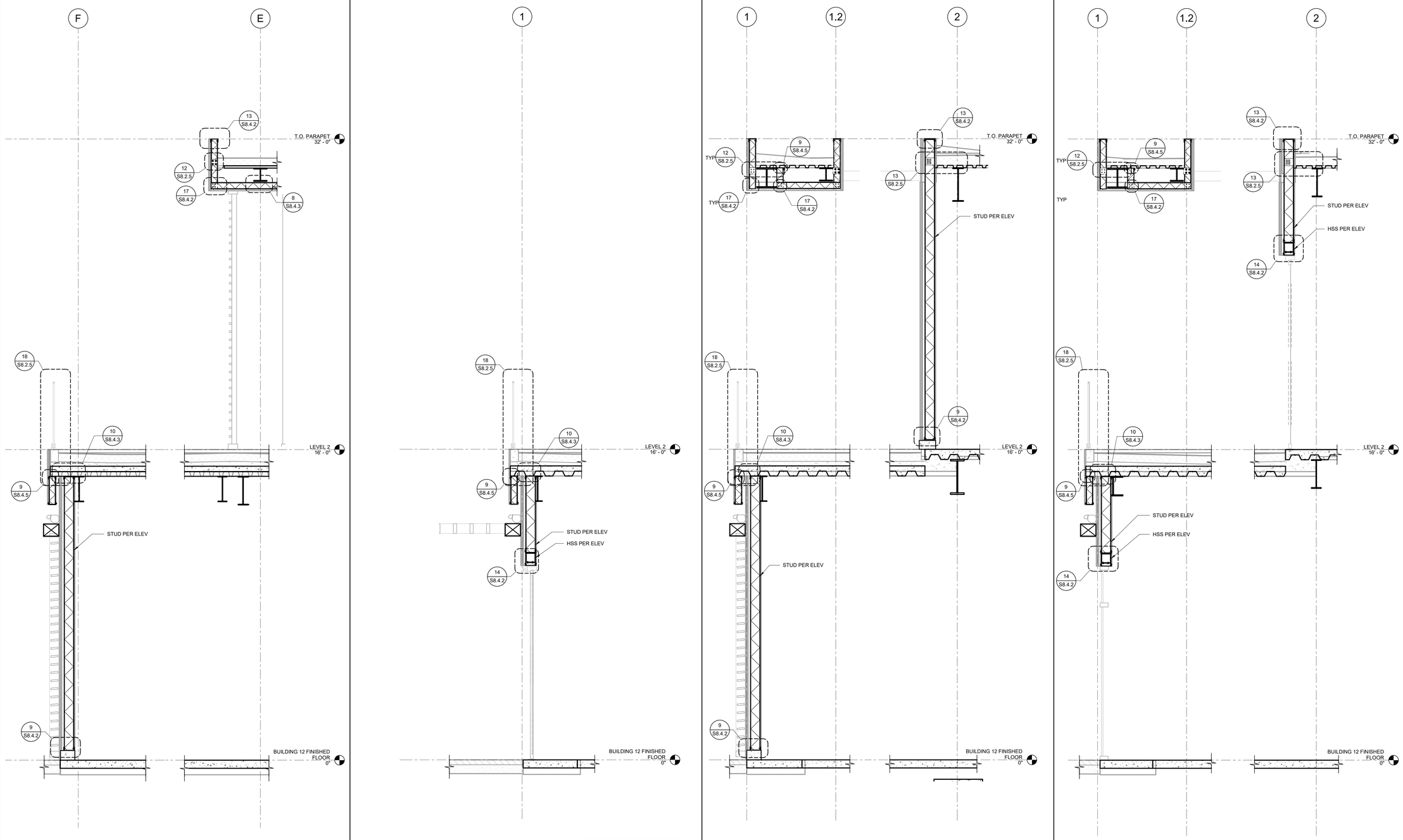

NOTE:
FOR TYPICAL SOFFIT FRAMING AND BRACING SEE 15/ S8.4.4.

WALL SECTION 1/2" = 1'-0" 4

NOTE:
FOR TYPICAL SOFFIT FRAMING AND BRACING SEE 15/ S8.4.4.

WALL SECTION 1/2" = 1'-0" 3

NOTE:
FOR TYPICAL SOFFIT FRAMING AND BRACING SEE 15/ S8.4.4.

WALL SECTION 1/2" = 1'-0" 2

NOTE:
FOR TYPICAL SOFFIT FRAMING AND BRACING SEE 15/ S8.4.4.

WALL SECTION 1/2" = 1'-0" 1

SMSARCHITECTS
100 Progress | Suite 250
Irvine, California 92618
949.757.3240 | www.sms-arch.com

CONSTANT
kpff
18400 Von Karman Ave., Suite 600
Irvine, CA 92612
O: 949.252.1022
F: 949.252.8082
www.kpff.com

DANA POINT HARBOR PARTNERS

PROJECT NAME
DANA POINT HARBOR COMMERCIAL CORE
BUILDING 12
1290 HARBOR WAY
DANA POINT, CA 92629

CLIENT
BURNHAM|WARD PROPERTIES

REGISTERED PROFESSIONAL ENGINEER
CHRISTOPHER ANDREW DOMINA
No. 5913
Exp. 12/31/25
STRUCTURAL
STATE OF CALIFORNIA

No.	DATE	ISSUE
	02/10/2023	100% DESIGN DEVELOPMENT
	04/21/2023	COUNTY RESUBMITTAL
A	07/24/2023	CITY RESUBMITTAL

DRAWINGS AND WRITTEN MATERIAL APPEARING HEREIN CONSTITUTE ORIGINAL AND UNPUBLISHED WORK OF SMS ARCHITECTS AND MAY NOT BE DUPLICATED, USED OR DISCLOSED WITHOUT WRITTEN CONSENT OF THE ARCHITECT

PROJECT NO. 1900799
DATE Issue Date
DRAWING TITLE
WALL SECTIONS

DRAWING NO.
S4.0.6

9/8/2023 10:41:30 AM

BIM 360://10081900799 - R21 Dana Point Harbor Revitalization/1900799_DPH_Building 12-Struct.rvt

Zoning: CanningK 11/13/2024

Building&Safety: OCPWAzarvandB 12/22/2025

Permits: BNR21-0246, ELE21-0853, MEC21-0514, PLB21-0900

County of Orange - OC Public Works
OC Development Services
APPROVED

This set of plans and specifications must be kept on the job at all times. It is unlawful to make any changes or alterations to these plans without written permission from OC Public Works, OC Development Services of Orange County. The stamping of these plan specifications SHALL NOT be held to permit or be an approval of the violation of any provisions of any County Ordinance or State law.

Hadi Tabatabaee
BUILDING OFFICIAL

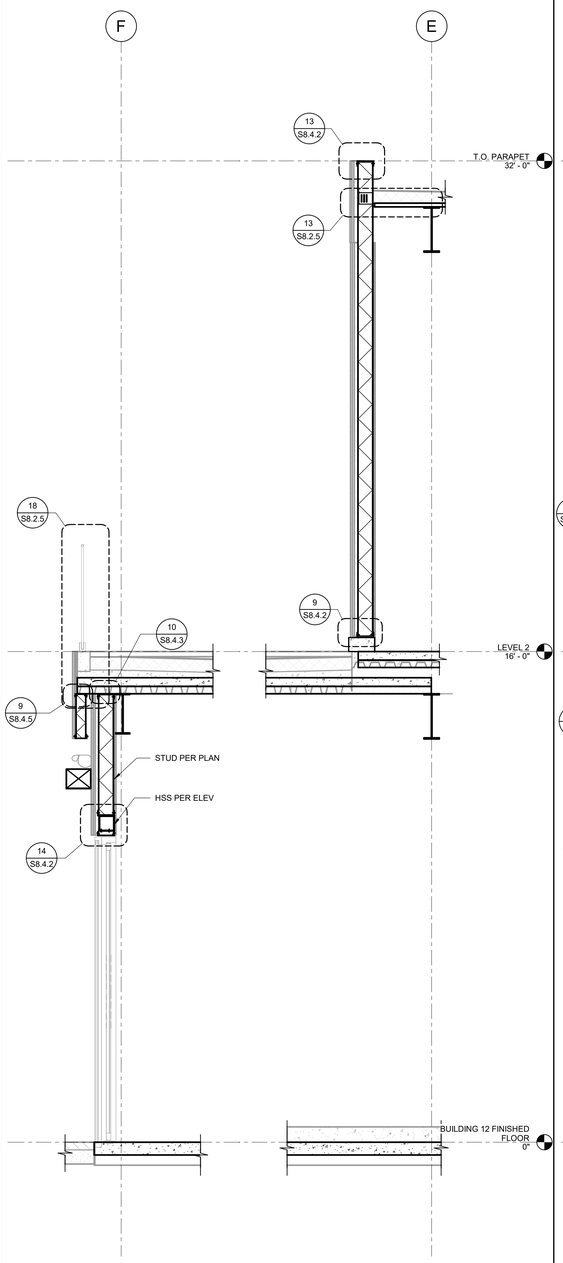

NOTE:
FOR TYPICAL SOFFIT FRAMING AND BRACING SEE 15/ S8.4.4.

WALL SECTION 1/2" = 1'-0" 4

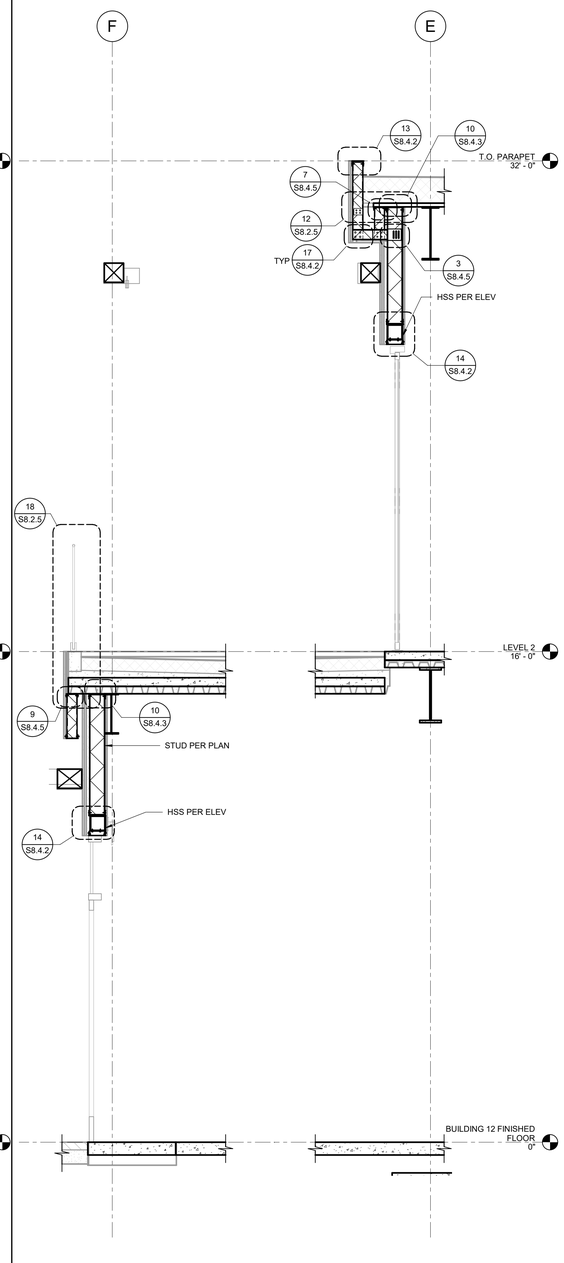

NOTE:
FOR TYPICAL SOFFIT FRAMING AND BRACING SEE 15/ S8.4.4.

WALL SECTION 1/2" = 1'-0" 3

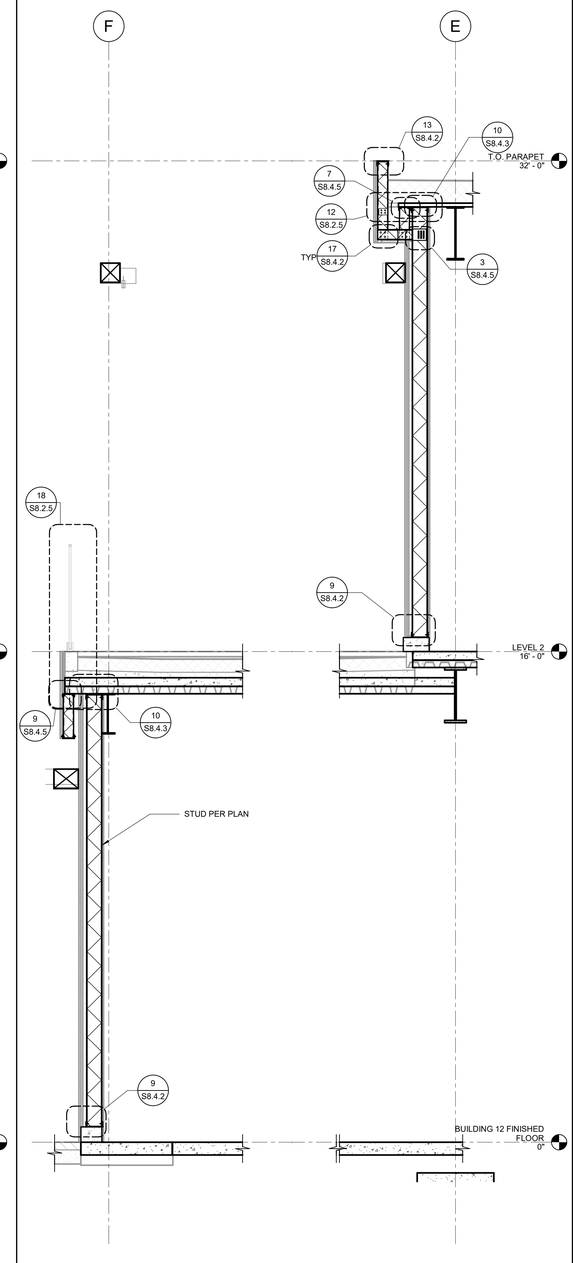

NOTE:
FOR TYPICAL SOFFIT FRAMING AND BRACING SEE 15/ S8.4.4.

WALL SECTION 1/2" = 1'-0" 2

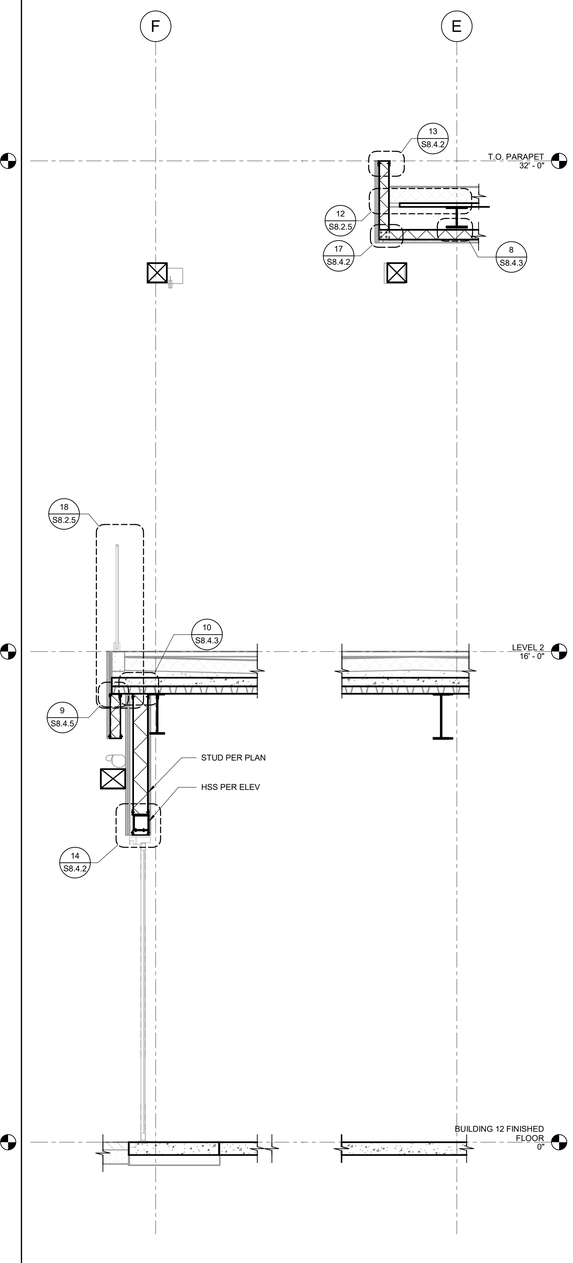

NOTE:
FOR TYPICAL SOFFIT FRAMING AND BRACING SEE 15/ S8.4.4.

WALL SECTION 1/2" = 1'-0" 1

BIM 360://1008/1900799 - R21 Dana Point Harbor Revitalization/1900799_DPH_Building 12-Struct.rvt

SMSARCHITECTS
100 Progress | Suite 250
Irvine, California 92618
949.757.3240 | www.sms-arch.com

CONSTANT
kpff
18400 Von Karman Ave., Suite 600
Irvine, CA 92612
O: 949.252.1022
F: 949.252.8082
www.kpff.com

DANA POINT HARBOR PARTNERS

PROJECT NAME
DANA POINT HARBOR COMMERCIAL CORE
BUILDING 12
1290 HARBOR WAY
DANA POINT, CA 92629

CLIENT
BWP BURNHAM|WARD PROPERTIES

REGISTERED PROFESSIONAL ENGINEER
CHRISTOPHER ANDREW DOMINICS
No. 5913
Exp. 12/31/25
STRUCTURAL
STATE OF CALIFORNIA

No.	DATE	ISSUE
	02/10/2023	100% DESIGN DEVELOPMENT
	04/21/2023	COUNTY RESUBMITTAL
A	07/24/2023	CITY RESUBMITTAL

DRAWINGS AND WRITTEN MATERIAL APPEARING HEREIN CONSTITUTE ORIGINAL AND UNPUBLISHED WORK OF SMS ARCHITECTS AND MAY NOT BE DUPLICATED, USED OR DISCLOSED WITHOUT WRITTEN CONSENT OF THE ARCHITECT

PROJECT NO. 1900799
DATE Issue Date
DRAWING TITLE
WALL SECTIONS

DRAWING NO.
S4.0.7

9/8/2023 10:41:35 AM

Zoning: CanningK 11/13/2024

Building&Safety: OCPWAzarvandB 12/22/2025

Permits: BNR21-0246, ELE21-0853, MEC21-0514, PLB21-0900

County of Orange - OC Public Works
OC Development Services
APPROVED

This set of plans and specifications must be kept on the job at all times. It is unlawful to make any changes or alterations to these plans without written permission from OC Public Works, OC Development Services of Orange County. The stamping of these plan specifications SHALL NOT be held to permit or be an approval of the violation of any provisions of any County Ordinance or State law.

Hadi Tabatabaee
BUILDING OFFICIAL

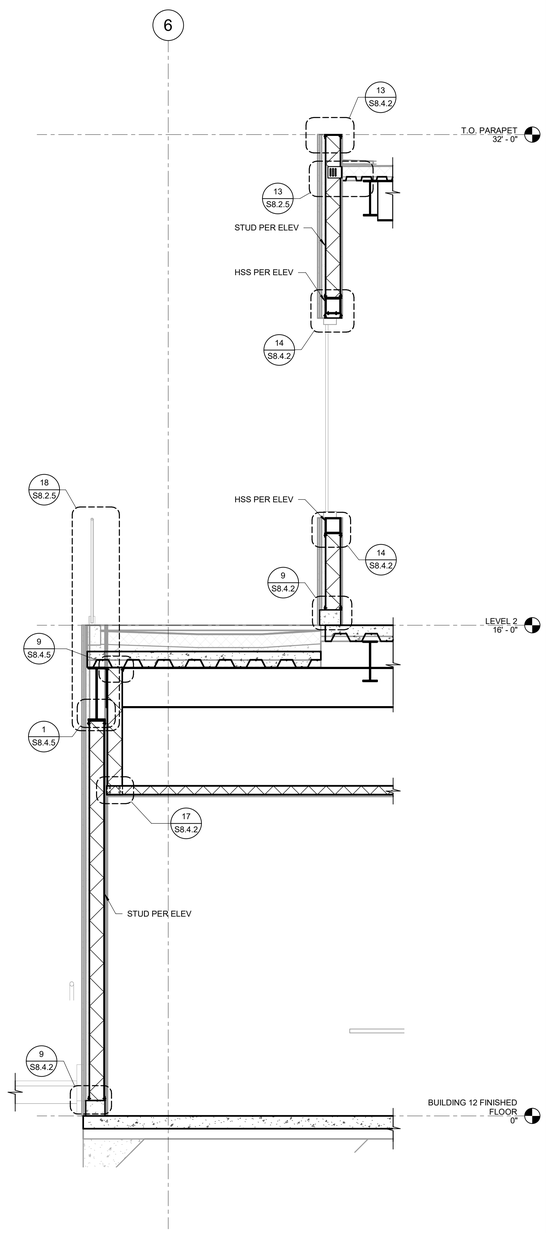

NOTE:
FOR TYPICAL SOFFIT FRAMING AND BRACING SEE 15/ S8.4.4.

WALL SECTION 1/2" = 1'-0" 4

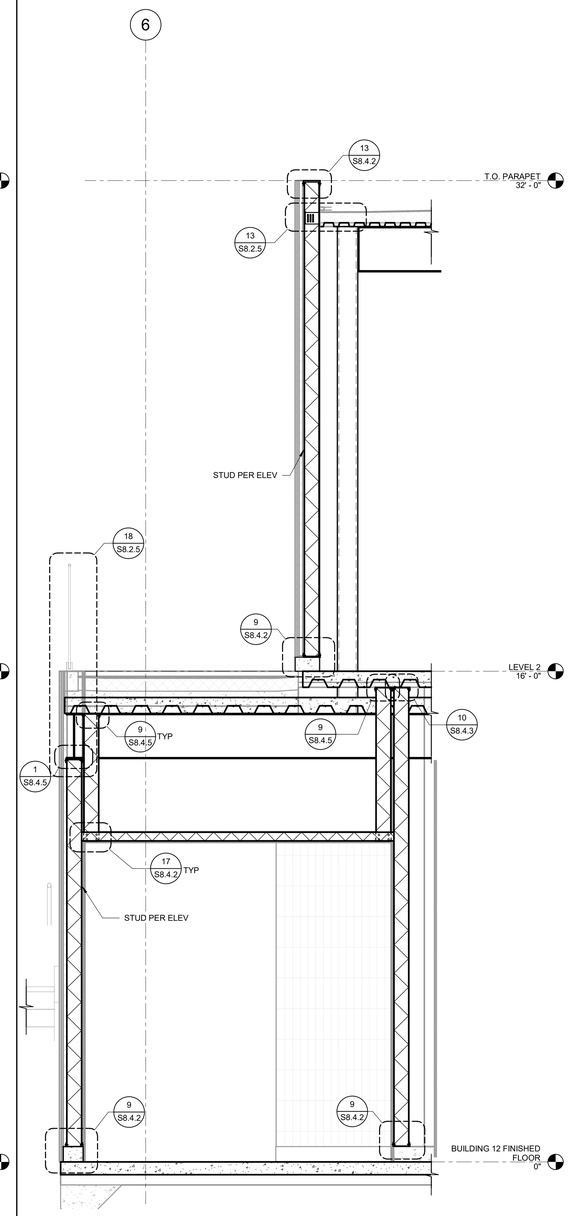

NOTE:
FOR TYPICAL SOFFIT FRAMING AND BRACING SEE 15/ S8.4.4.

WALL SECTION 1/2" = 1'-0" 3

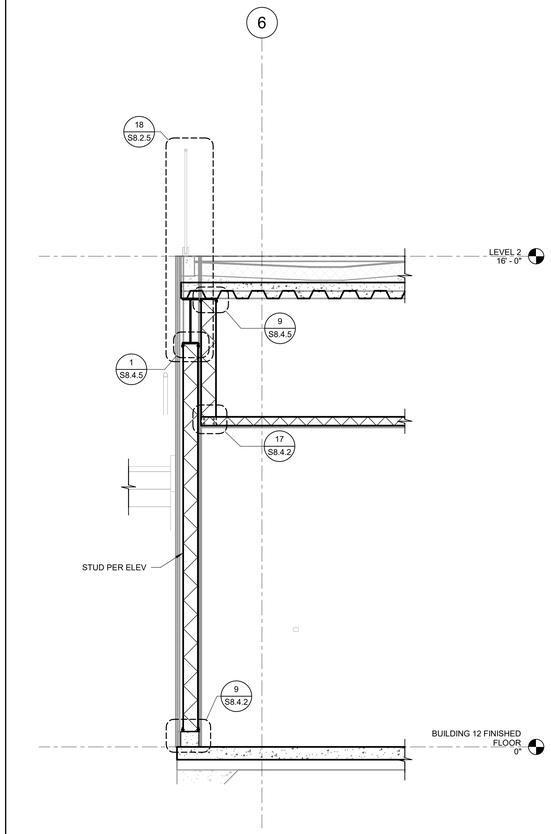

NOTE:
FOR TYPICAL SOFFIT FRAMING AND BRACING SEE 15/ S8.4.4.

WALL SECTION 1/2" = 1'-0" 2

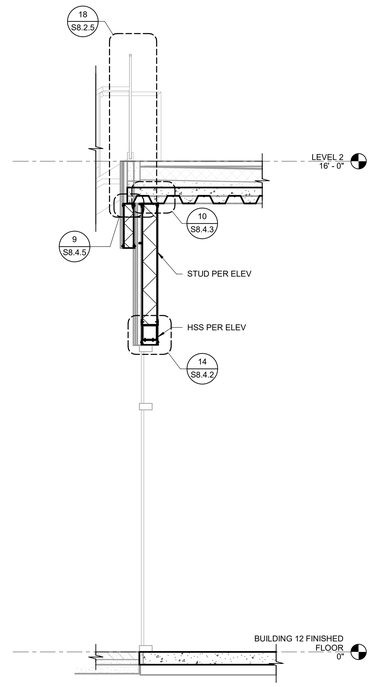

NOTE:
FOR TYPICAL SOFFIT FRAMING AND BRACING SEE 15/ S8.4.4.

WALL SECTION 1/2" = 1'-0" 1

SMSARCHITECTS
100 Progress | Suite 250
Irvine, California 92618
949.757.3240 | www.sms-arch.com

CONSTANT
kpff
18400 Von Karman Ave., Suite 600
Irvine, CA 92612
O: 949.252.1022
F: 949.252.8082
www.kpff.com

DANA POINT HARBOR PARTNERS

PROJECT NAME
DANA POINT HARBOR COMMERCIAL CORE
BUILDING 12
1290 HARBOR WAY
DANA POINT, CA 92629

CLIENT
BWP BURNHAM|WARD PROPERTIES

REGISTERED PROFESSIONAL ENGINEER
CHRISTOPHER ANDREW DOMINA
No. 5913
Exp. 12/31/25
STRUCTURAL
STATE OF CALIFORNIA

No.	DATE	ISSUE
	02/10/2023	100% DESIGN DEVELOPMENT
	04/21/2023	COUNTY RESUBMITTAL
A	07/24/2023	CITY RESUBMITTAL

DRAWINGS AND WRITTEN MATERIAL APPEARING HEREIN CONSTITUTE ORIGINAL AND UNPUBLISHED WORK OF SMS ARCHITECTS AND MAY NOT BE DUPLICATED, USED OR DISCLOSED WITHOUT WRITTEN CONSENT OF THE ARCHITECT

PROJECT NO. 1900799
DATE Issue Date
DRAWING TITLE
WALL SECTIONS

DRAWING NO.
S4.0.8

9/8/2023 10:41:41 AM

BIM 360://1008191900799 - R21 Dana Point Harbor Revitalization/1900799_DPH_Building 12-Struct.rvt

Zoning: CanningK 11/13/2024

Building&Safety: OCPWAzarvandB 12/22/2025

Permits: BNR21-0246, ELE21-0853, MEC21-0514, PLB21-0900

County of Orange - OC Public Works
OC Development Services
APPROVED

This set of plans and specifications must be kept on the job at all times. It is unlawful to make any changes or alterations to these plans without written permission from OC Public Works, OC Development Services of Orange County. The stamping of these plan specifications SHALL NOT be held to permit or be an approval of the violation of any provisions of any County Ordinance or State law.

Hadi Tabatabaee
BUILDING OFFICIAL

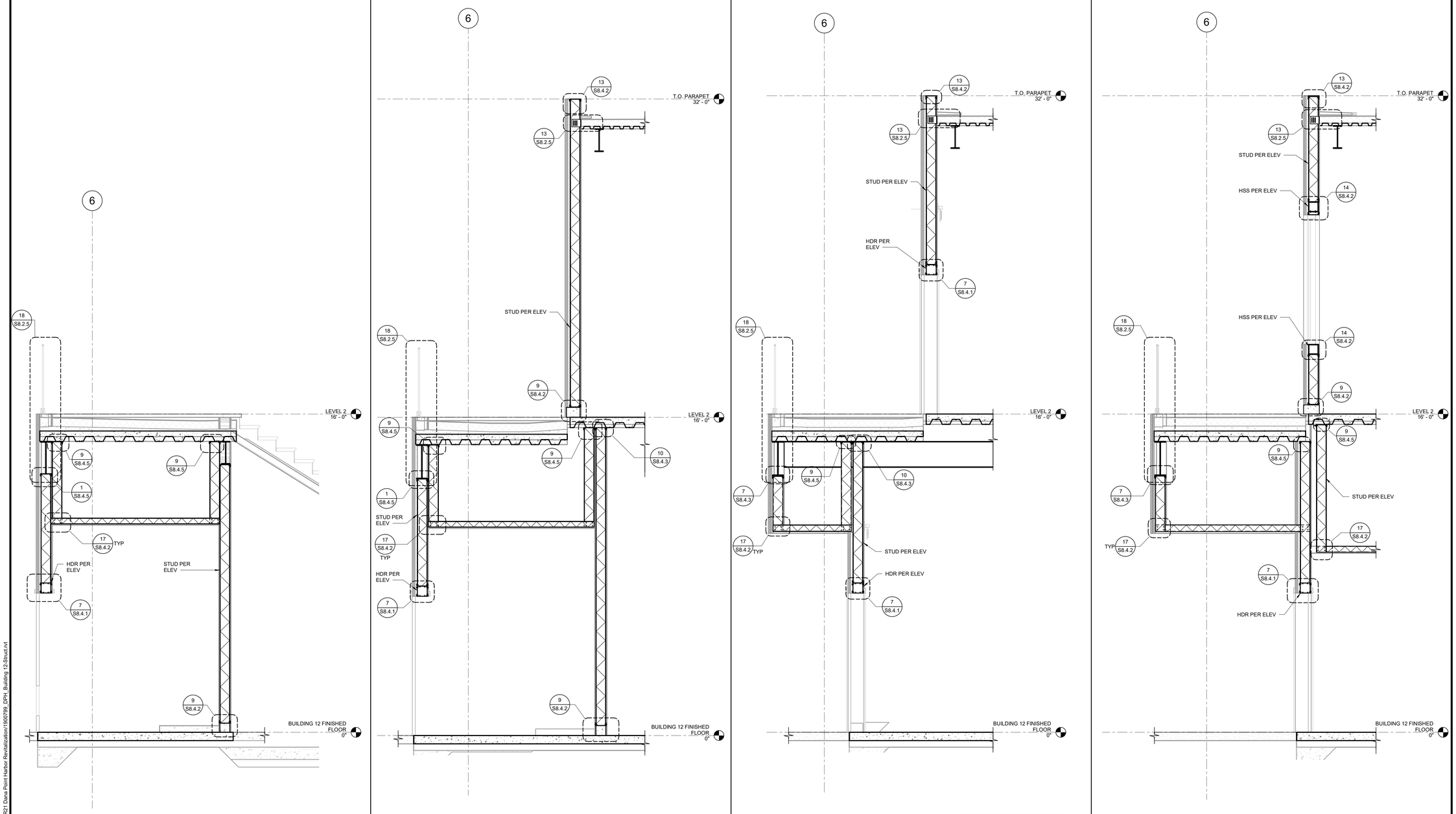

NOTE:
FOR TYPICAL SOFFIT FRAMING AND BRACING SEE 15/ S8.4.4.

WALL SECTION 1/2" = 1'-0" 4

NOTE:
FOR TYPICAL SOFFIT FRAMING AND BRACING SEE 15/ S8.4.4.

WALL SECTION 1/2" = 1'-0" 3

NOTE:
FOR TYPICAL SOFFIT FRAMING AND BRACING SEE 15/ S8.4.4.

WALL SECTION 1/2" = 1'-0" 2

NOTE:
FOR TYPICAL SOFFIT FRAMING AND BRACING SEE 15/ S8.4.4.

WALL SECTION 1/2" = 1'-0" 1

SMSARCHITECTS
100 Progress | Suite 250
Irvine, California 92618
949.757.3240 | www.sms-arch.com

CONSTANT
kpff
18400 Von Karman Ave., Suite 600
Irvine, CA 92612
O: 949.252.1022
F: 949.252.8082
www.kpff.com

DANA POINT HARBOR PARTNERS

PROJECT NAME
DANA POINT HARBOR COMMERCIAL CORE
BUILDING 12
1290 HARBOR WAY
DANA POINT, CA 92629

CLIENT
BWP BURNHAM|WARD PROPERTIES

REGISTERED PROFESSIONAL ENGINEER
CHRISTOPHER ANDREW DOMINAS
No. 5913
Exp. 12/31/25
STRUCTURAL
STATE OF CALIFORNIA

No.	DATE	ISSUE
	02/10/2023	100% DESIGN DEVELOPMENT
	04/21/2023	COUNTY RESUBMITTAL
A	07/24/2023	CITY RESUBMITTAL

DRAWINGS AND WRITTEN MATERIAL APPEARING HEREIN CONSTITUTE ORIGINAL AND UNPUBLISHED WORK OF SMS ARCHITECTS AND MAY NOT BE DUPLICATED, USED OR DISCLOSED WITHOUT WRITTEN CONSENT OF THE ARCHITECT

PROJECT NO. 1900799
DATE Issue Date
DRAWING TITLE
WALL SECTIONS

DRAWING NO.
S4.0.9

9/8/2023 10:41:47 AM

BIM 360://10081900799 - R21 Dana Point Harbor Revitalization/1900799_DPH_Building 12-Struct.rvt

Zoning: CanningK 11/13/2024

Building&Safety: OCPWAzarvandB 12/22/2025

Permits: BNR21-0246, ELE21-0853, MEC21-0514, PLB21-0900

County of Orange - OC Public Works
OC Development Services
APPROVED

This set of plans and specifications must be kept on the job at all times. It is unlawful to make any changes or alterations to these plans without written permission from OC Public Works, OC Development Services of Orange County. The stamping of these plan specifications SHALL NOT be held to permit or be an approval of the violation of any provisions of any County Ordinance or State law.

Hadi Tabatabaee
BUILDING OFFICIAL

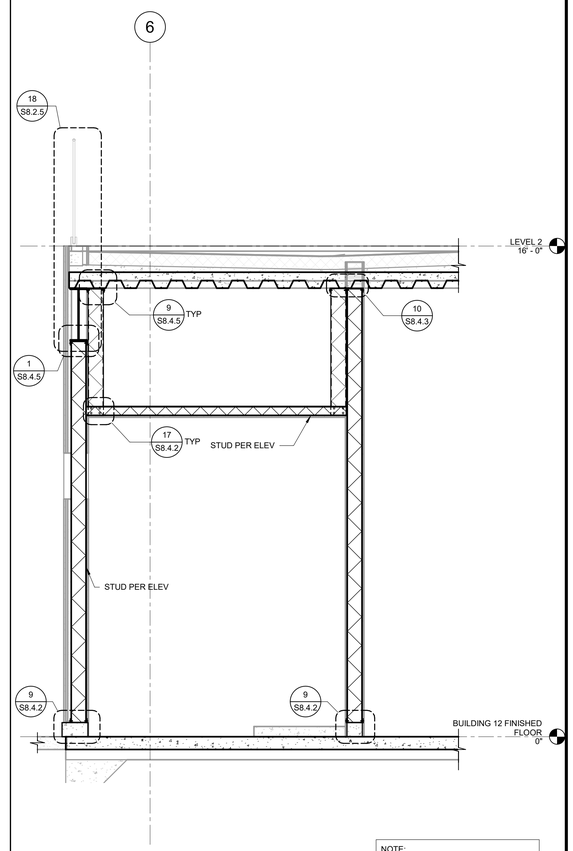

NOTE:
FOR TYPICAL SOFFIT FRAMING AND BRACING SEE 15/ S8.4.4.

WALL SECTION 1/2" = 1'-0" 1

SMSARCHITECTS
100 Progress | Suite 250
Irvine, California 92618
949.757.3240 | www.sms-arch.com

CONSTANT
kpff
18400 Von Karman Ave., Suite 600
Irvine, CA 92612
O: 949.252.1022
F: 949.252.8082
www.kpff.com

DANA POINT HARBOR PARTNERS

PROJECT NAME
DANA POINT HARBOR COMMERCIAL CORE
BUILDING 12
1290 HARBOR WAY
DANA POINT, CA 92629

CLIENT
BWP BURNHAM|WARD PROPERTIES

REGISTERED PROFESSIONAL ENGINEER
CHRISTOPHER ANDREW DOMINICA
No. 5913
Exp. 12/31/25
STRUCTURAL
STATE OF CALIFORNIA

No.	DATE	ISSUE
	02/10/2023	100% DESIGN DEVELOPMENT
	04/21/2023	COUNTY RESUBMITTAL
A	07/24/2023	CITY RESUBMITTAL

DRAWINGS AND WRITTEN MATERIAL APPEARING HEREIN CONSTITUTE ORIGINAL AND UNPUBLISHED WORK OF SMS ARCHITECTS AND MAY NOT BE DUPLICATED, USED OR DISCLOSED WITHOUT WRITTEN CONSENT OF THE ARCHITECT

PROJECT NO. 1900799
DATE Issue Date
DRAWING TITLE
WALL SECTIONS

DRAWING NO.
S4.0.10

9/8/2023 10:41:04 AM

BIM 360://10081900799 - R21 Dana Point Harbor Revitalization/1900799_DPH_Building 12-Struct.rvt

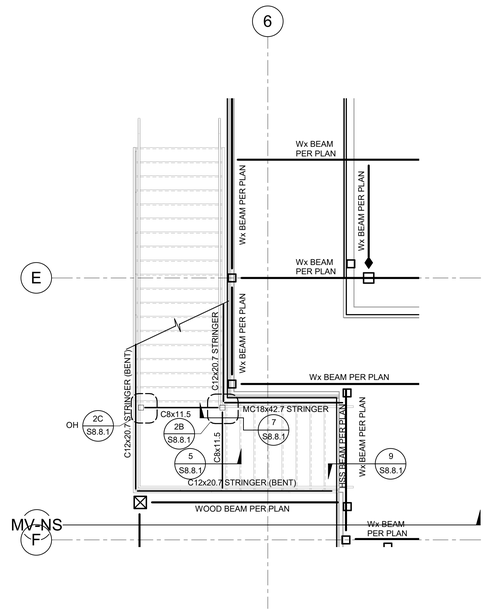

ENLARGED STAIR FRAMING PLAN - LEVEL 2 | 1/4" = 1'-0" | 4

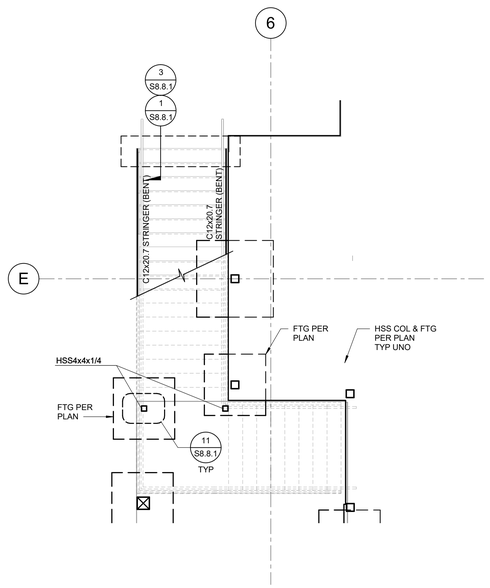

ENLARGED STAIR FOUNDATION PLAN | 1/4" = 1'-0" | 3

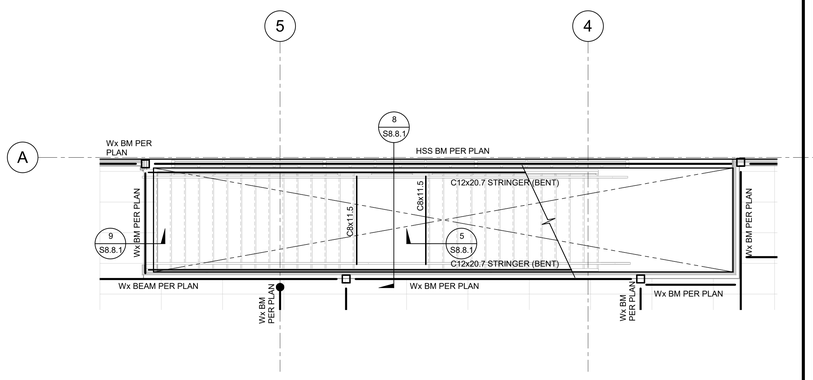

ENLARGED STAIR FRAMING PLAN - LEVEL 2 | 1/4" = 1'-0" | 2

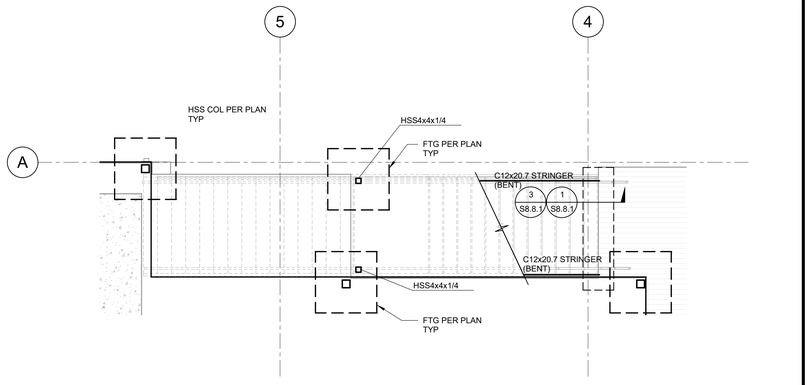

ENLARGED STAIR FOUNDATION PLAN | 1/4" = 1'-0" | 1

Zoning: CanningK 11/13/2024

Building&Safety: OCPWAzarvandB 12/22/2025

Permits: BNR21-0246, ELE21-0853, MEC21-0514, PLB21-0900

County of Orange - OC Public Works
OC Development Services
APPROVED

This set of plans and specifications must be kept on the job at all times. It is unlawful to make any changes or alterations to these plans without written permission from OC Public Works, OC Development Services of Orange County. The stamping of these plan specifications SHALL NOT be held to permit or be an approval of the violation of any provisions of any County Ordinance or State law.

Hadi Tabatabaee
BUILDING OFFICIAL

SMSARCHITECTS
100 Progress | Suite 250
Irvine, California 92618
949.757.3240 | www.sms-arch.com

CONSTANT
kpff
18400 Von Karman Ave., Suite 600
Irvine, CA 92612
O: 949.252.1022
F: 949.252.8082
www.kpff.com

DANA POINT HARBOR PARTNERS

PROJECT NAME
DANA POINT HARBOR COMMERCIAL CORE
BUILDING 12
1290 HARBOR WAY
DANA POINT, CA 92629

CLIENT
BWP BURNHAM|WARD PROPERTIES

REGISTERED PROFESSIONAL ENGINEER
CHRISTOPHER ANDREW DOMINICK
No. 5913
Exp. 12/31/25
STRUCTURAL
STATE OF CALIFORNIA

No.	DATE	ISSUE
	02/10/2023	100% DESIGN DEVELOPMENT
	04/21/2023	COUNTY RESUBMITTAL
A	07/24/2023	CITY RESUBMITTAL

DRAWINGS AND WRITTEN MATERIAL APPEARING HEREIN CONSTITUTE ORIGINAL AND UNPUBLISHED WORK OF SMS ARCHITECTS AND MAY NOT BE DUPLICATED, USED OR DISCLOSED WITHOUT WRITTEN CONSENT OF THE ARCHITECT

PROJECT NO. 1900799
DATE Issue Date
DRAWING TITLE
ENLARGED STAIR PLANS
DRAWING NO.
S5.0.1

9/8/2023 10:41:51 AM

BIM 360://1008191900799 - R21 Dana Point Harbor Revitalization/1900799_DPH_Building 12-Struct.rvt

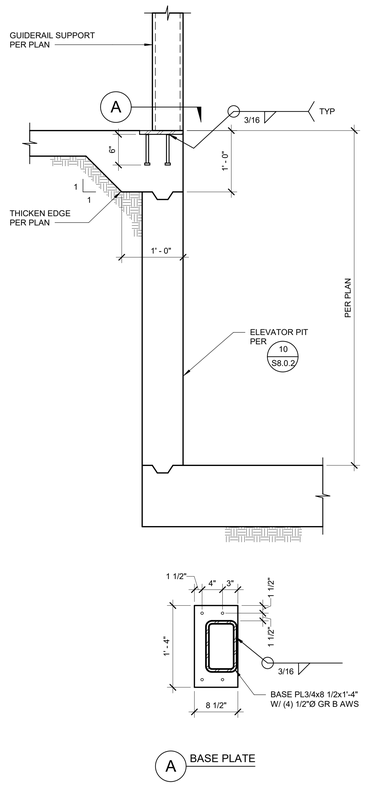

ELEVATOR GUIDERAIL BASE 1" = 1'-0" 19

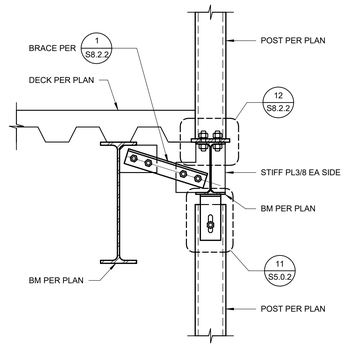

GUIDERAIL SUPPORT CONNECTION 1" = 1'-0" 16

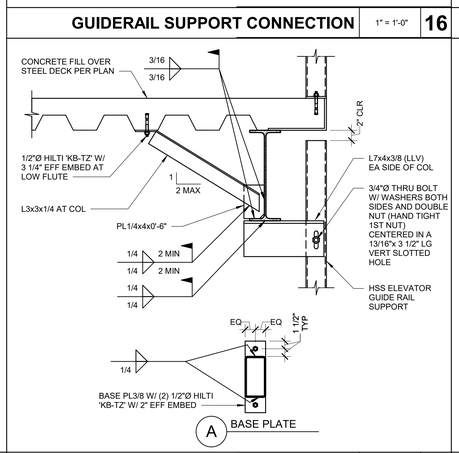

ELEVATOR GUIDERAIL SUPPORT 1" = 1'-0" 15

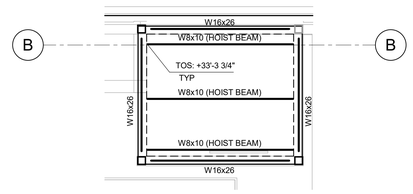

ENLARGED EVEVATOR HIGH ROOF FRAMING PLAN 1/4" = 1'-0" 8

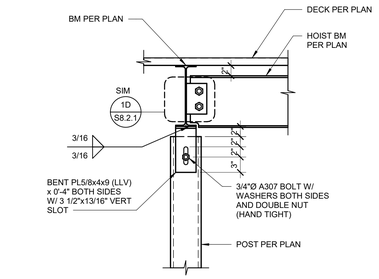

GUIDERAIL SUPPORT POST CONNECTION 1" = 1'-0" 11

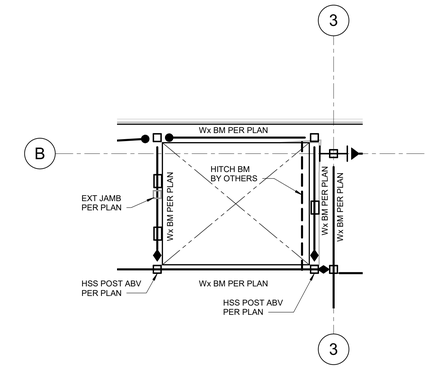

ENLARGED ELEVATOR ROOF FRAMING PLAN 1/4" = 1'-0" 3

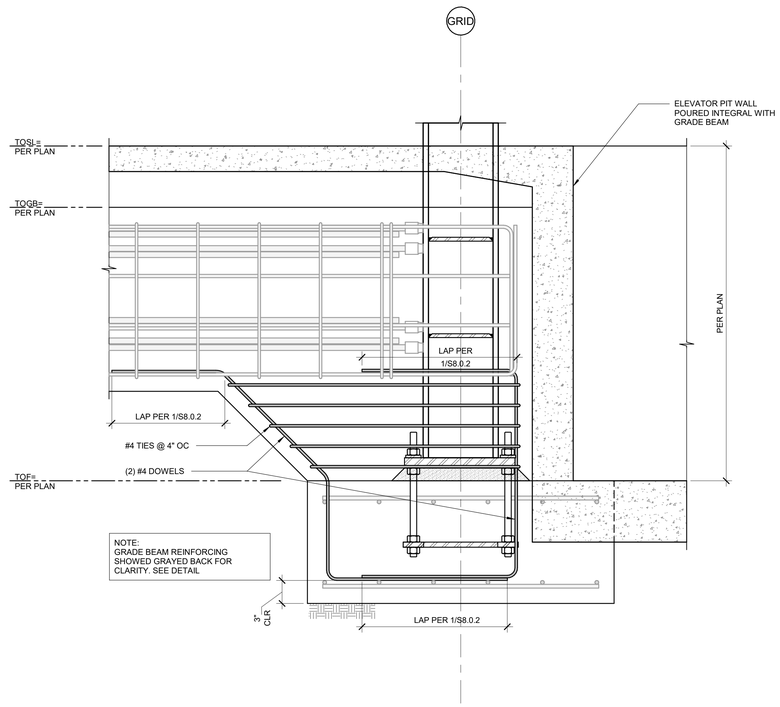

SPECIAL MOMENT FRAME BASE DETAILS 1" = 1'-0" 13

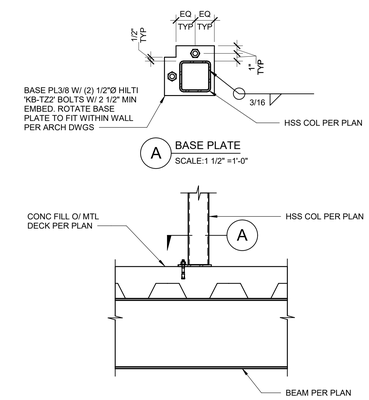

POST AT ELEVATOR FRAMING 1" = 1'-0" 10

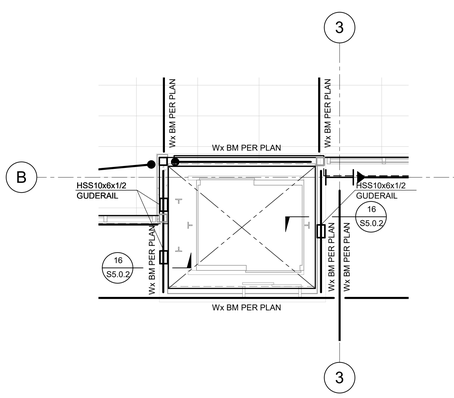

ENLARGED ELEVATOR LEVEL 2 FRAMING PLAN 1/4" = 1'-0" 2

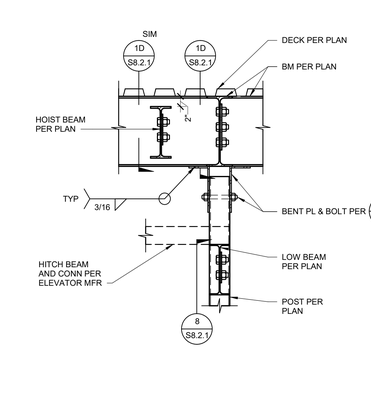

HOIST BEAM CONNECTION 1" = 1'-0" 9

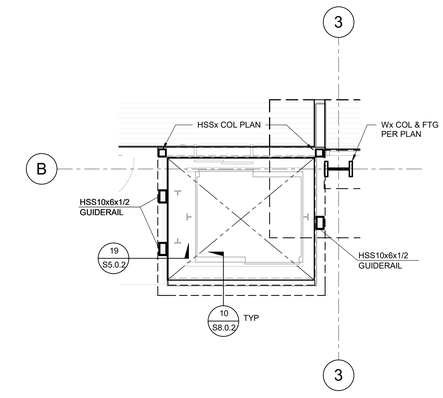

ENLARGED ELEVATOR FOUNDATION PLAN 1/4" = 1'-0" 1

Zoning: CanningK 11/13/2024

Building&Safety: OCPWAzarvandB 12/22/2025

Permits: BNR21-0246, ELE21-0853, MEC21-0514, PLB21-0900

County of Orange - OC Public Works
OC Development Services
APPROVED

This set of plans and specifications must be kept on the job at all times. It is unlawful to make any changes or alterations to these plans without written permission from OC Public Works, OC Development Services of Orange County. The stamping of these plan specifications SHALL NOT be held to permit or be an approval of the violation of any provisions of any County Ordinance or State law.

Hind Tahtabaee
BUILDING OFFICIAL

SMSARCHITECTS
100 Progress | Suite 250
Irvine, California 92618
949.757.3240 | www.sms-arch.com

CONSTANT
kpff
18400 Von Karman Ave., Suite 600
Irvine, CA 92612
O: 949.252.1022
F: 949.252.8082
www.kpff.com

DANA POINT HARBOR PARTNERS

PROJECT NAME
DANA POINT HARBOR COMMERCIAL CORE
BUILDING 12
1290 HARBOR WAY
DANA POINT, CA 92629

CLIENT
BWP PROPERTIES
BURNHAM|WARD

STRUCTURAL ENGINEER ANDREW P. WU No. 5913 Exp. 12/31/25 STRUCTURAL STATE OF CALIFORNIA

No.	DATE	ISSUE
	02/10/2023	100% DESIGN DEVELOPMENT
	04/21/2023	COUNTY RESUBMITTAL
A	07/24/2023	CITY RESUBMITTAL

DRAWINGS AND WRITTEN MATERIAL APPEARING HEREIN CONSTITUTE ORIGINAL AND UNPUBLISHED WORK OF SMS ARCHITECTS AND MAY NOT BE DUPLICATED, USED OR DISCLOSED WITHOUT WRITTEN CONSENT OF THE ARCHITECT

PROJECT NO 1900799

DATE Issue Date

DRAWING TITLE
ENLARGED ELEVATOR PLANS & DETAILS

DRAWING NO.
S5.0.2

BIM 360://1008/1900799 - R21 Dana Point Harbor Revitalization/1900799_DPH_Building 12-Struct.rvt

9/8/2023 10:41:57 AM

Zoning: CanningK 11/13/2024

Building&Safety: OCPWAzarvandB 12/22/2025

Permits: BNR21-0246, ELE21-0853, MEC21-0514, PLB21-0900

County of Orange - OC Public Works
OC Development Services
APPROVED

This set of plans and specifications must be kept on the job at all times. It is unlawful to make any changes or alterations to these plans without written permission from OC Public Works, OC Development Services of Orange County. The stamping of these plan specifications SHALL NOT be held to permit or be an approval of the violation of any provisions of any County Ordinance or State law.

Hadi Tabatabaee
BUILDING OFFICIAL

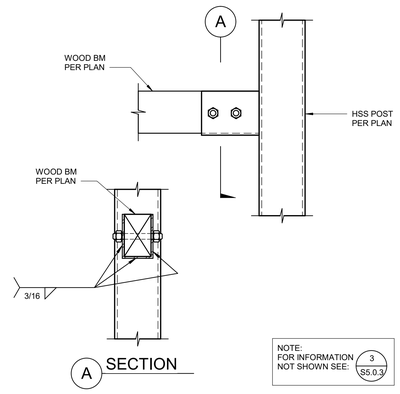

WOOD BEAM TO HSS POST CONN 1 1/2" = 1'-0" 7

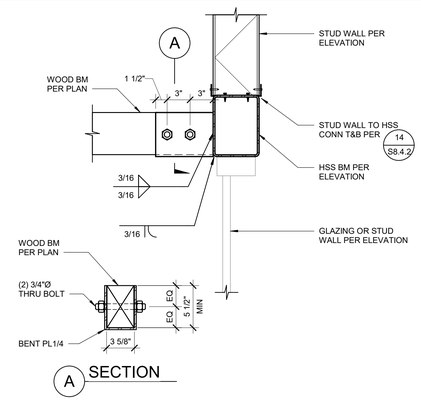

WOOD BEAM TO HSS HEADER CONN 1 1/2" = 1'-0" 3

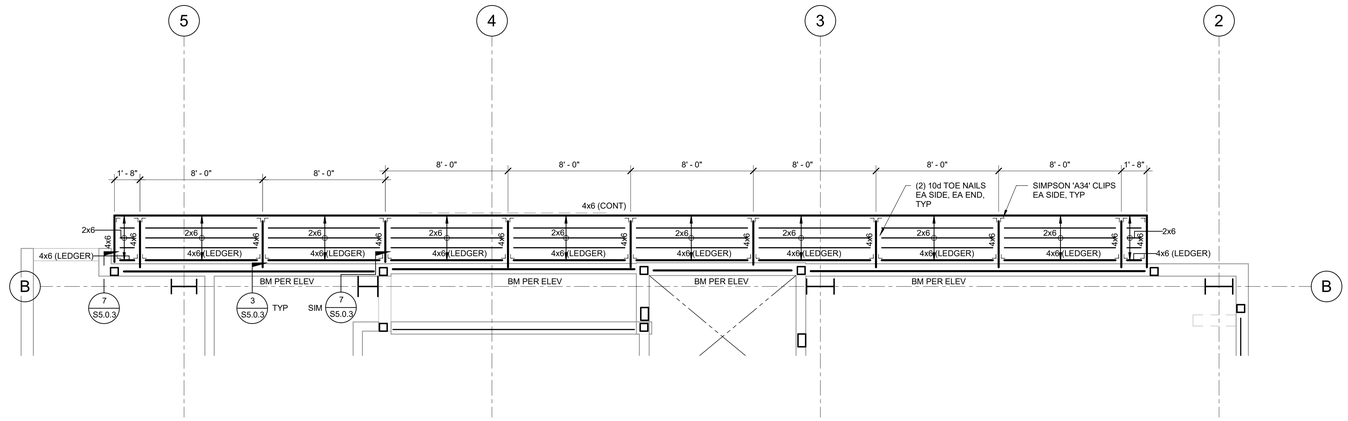

ENLARGED TRELLIS PLAN 1/4" = 1'-0" 1

SMSARCHITECTS
100 Progress | Suite 250
Irvine, California 92618
949.757.3240 | www.sms-arch.com

CONSTANT
kpff
18400 Von Karman Ave., Suite 600
Irvine, CA 92612
O: 949.252.1022
F: 949.252.8082
www.kpff.com

DANA POINT HARBOR PARTNERS

PROJECT NAME
DANA POINT HARBOR COMMERCIAL CORE
BUILDING 12
1290 HARBOR WAY
DANA POINT, CA 92629

CLIENT
BURNHAM|WARD PROPERTIES

REGISTERED PROFESSIONAL ENGINEER
CHRISTOPHER ANDREW DOMINICS
No. 5913
Exp. 12/31/25
STRUCTURAL
STATE OF CALIFORNIA

No.	DATE	ISSUE

DRAWINGS AND WRITTEN MATERIAL APPEARING HEREIN CONSTITUTE ORIGINAL AND UNPUBLISHED WORK OF SMS ARCHITECTS AND MAY NOT BE DUPLICATED, USED OR DISCLOSED WITHOUT WRITTEN CONSENT OF THE ARCHITECT

PROJECT NO. 1900799
DATE Issue Date
DRAWING TITLE
ENLARGED TRELLIS PLAN & DETAILS
DRAWING NO.
S5.0.3

9/8/2023 10:42:00 AM

BIM 360://10081900799 - R21 Dana Point Harbor Revitalization/1900799_DPH_Building 12-Struct.rvt

THIS PLAN HAS BEEN REVIEWED BY GMU GEOTECHNICAL, INC. FOR GENERAL CONFORMITY TO THE RECOMMENDATIONS CONTAINED IN THE PROJECT GEOTECHNICAL REPORT(S).

REVIEW OF NON-GEOTECHNICAL ENGINEERING DESIGN IS OUTSIDE OF GMU GEOTECHNICAL, INC.'S PURVIEW.

REGISTERED PROFESSIONAL ENGINEER · SCOTT H WARD · C95205 · CIVIL · STATE OF CALIFORNIA

THIS PLAN HAS BEEN REVIEWED BY GMU GEOTECHNICAL, INC. FOR GENERAL CONFORMITY TO THE RECOMMENDATIONS / CONCLUSIONS CONTAINED IN THEIR GEOTECHNICAL REPORT(S).

REVIEW OF NON-GEOTECHNICAL ENGINEERING DESIGN IS OUTSIDE THE PURVIEW OF GMU GEOTECHNICAL, INC.

ARON R. TAYLOR CEG 2455 12/7/23

PROFESSIONAL GEOLOGIST · ARON R. TAYLOR · No. 2455 · CERTIFIED ENGINEERING GEOLOGIST · STATE OF CALIFORNIA

NOTE:
1. REFER TO PLANS FOR SCHEDULE.

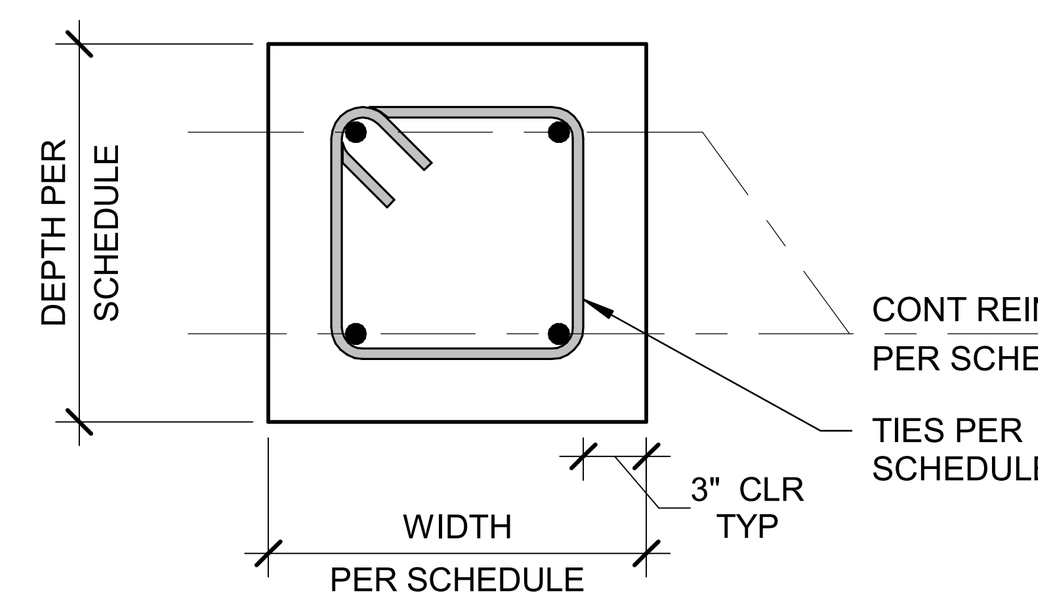

NOTES:
1. FOUNDATION SUBGRADE SHALL BEAR ON DEEP SOIL MIXED (DSM) COLUMNS EXTENDED TO BEDROCK OR ON A LIFT OF THE LTP NO MORE THAN 1=FOOT THICK UNLESS AUTHORIZED BY THE SOILS ENGINEER (GMU) OVER THE DSM COLUMNS.

2. SLAB SUBGRADE SHOULD BE THE INSTALLED LOAD TRANSFER PLATFORM (LTP) APPROVED BY THE SOILS ENGINEER (GMU) PRIOR TO THE PLACEMENT OF THE VAPOR BARRIER).

TIE BEAM DETAIL — 1" = 1'-0" — 12

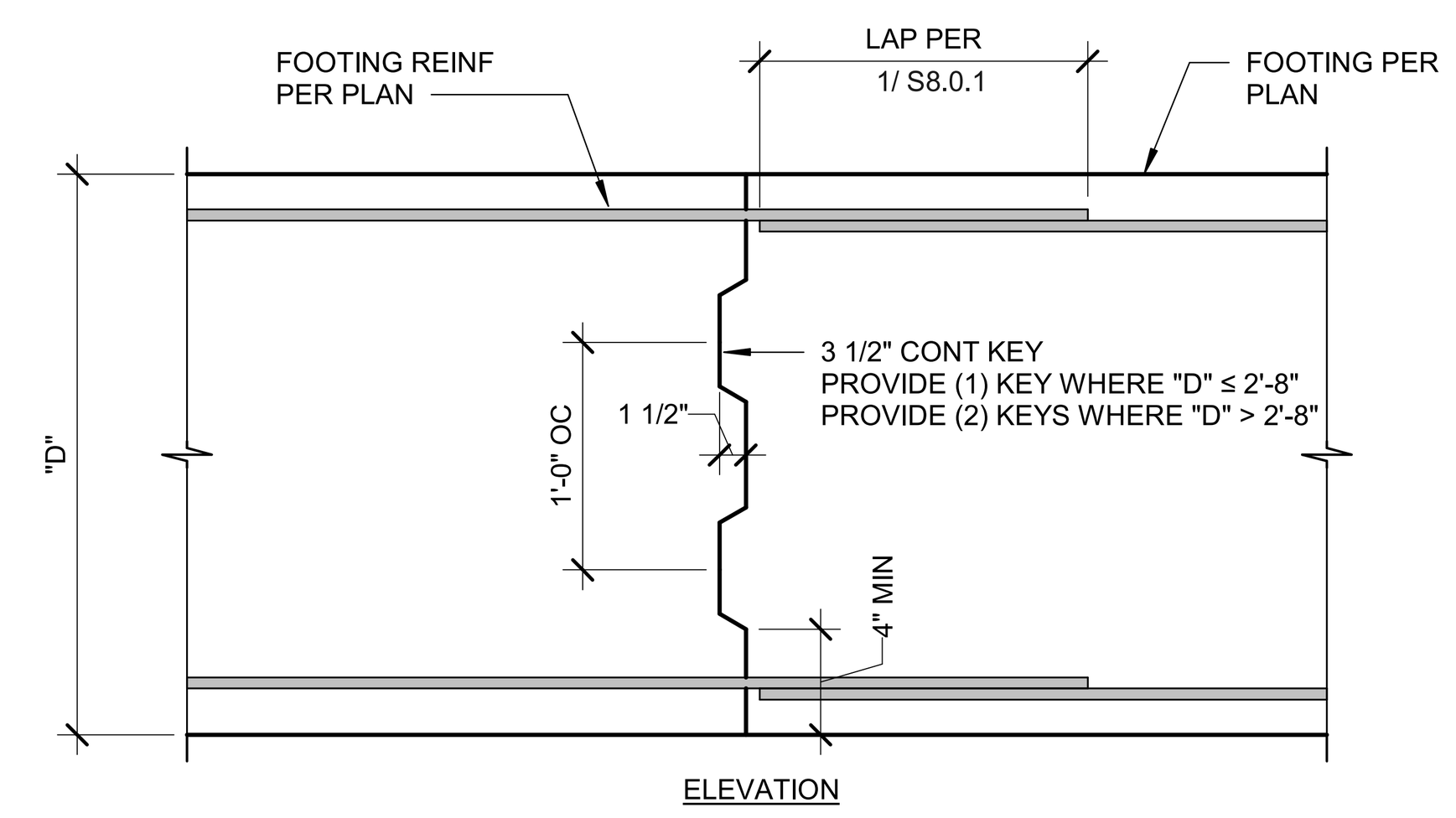

NOTE:
THE CONTRACTOR SHALL SUBMIT THE PROPOSED LOCATIONS OF CONSTRUCTION JOINTS FOR APPROVAL BY THE STRUCTURAL ENGINEER BEFORE STARTING CONSTRUCTION.

CONT FOOTING CONSTRUCTION JOINT — NTS — 8

Zoning: CanningK 11/13/2024

Building&Safety: OCPWAzarvandB 12/22/2025

Permits: BNR21-0246, ELE21-0853, MEC21-0514, PLB21-0900

County of Orange - OC Public Works
OC Development Services
APPROVED

This set of plans and specifications must be kept on the job at all times. It is unlawful to make any changes or alterations to these plans without written permission from OC Public Works, OC Development Services of Orange County. The stamping of these plan specifications SHALL NOT be held to permit or be an approval of the violation of any provisions of any County Ordinance or State law.

Hadi Tabatabaee
BUILDING OFFICIAL

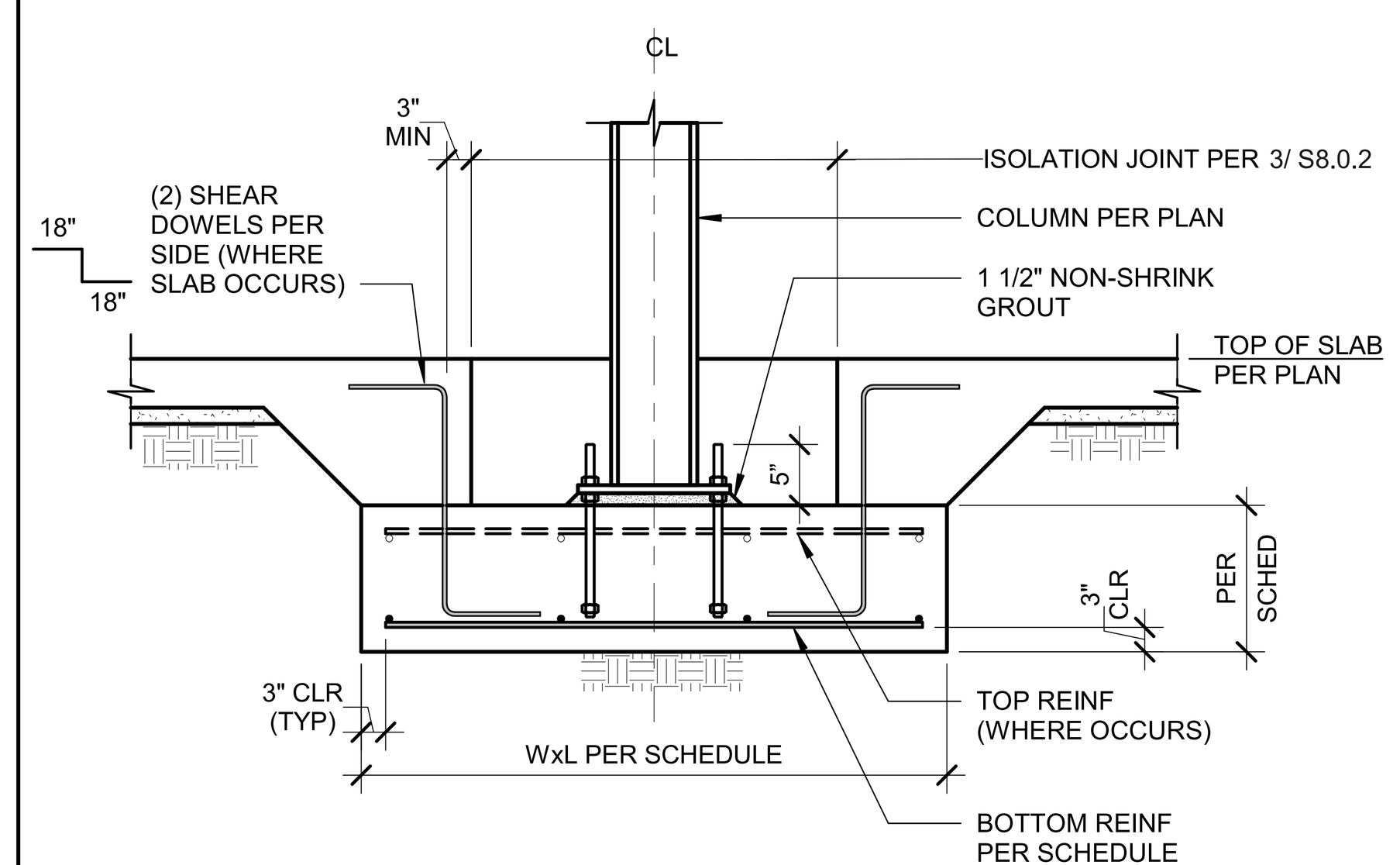

PAD FOOTING AT STEEL COLUMN — NTS — 11

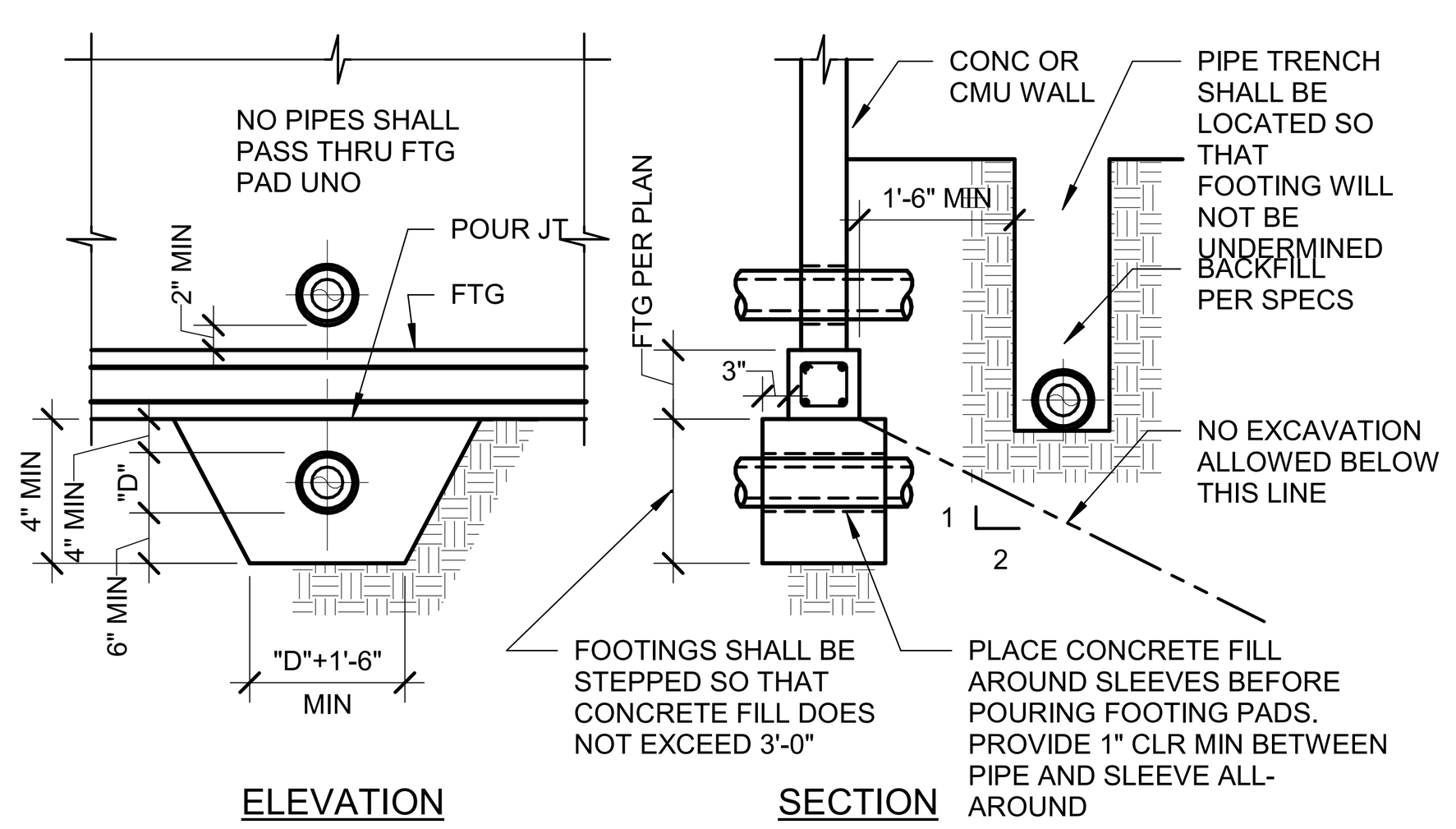

NOTES:
1. WHEN SEVERAL PIPES ARE EMBEDDED, MAINTAIN 2 DIAMETERS OR 6" MIN HORIZONTAL DISTANCE BETWEEN PIPES.
2. CONDUITS NEED TO BE SLEEVED PER THIS DETAIL. IT IS ACCEPATABLE TO GROUP CONDUITS OF THE SAME NATURE IN THE SAME SLEEVE.
3. "D" = OUTSIDE DIAMETER OF SLEEVE.

PIPE TRENCH DETAIL — NTS — 7

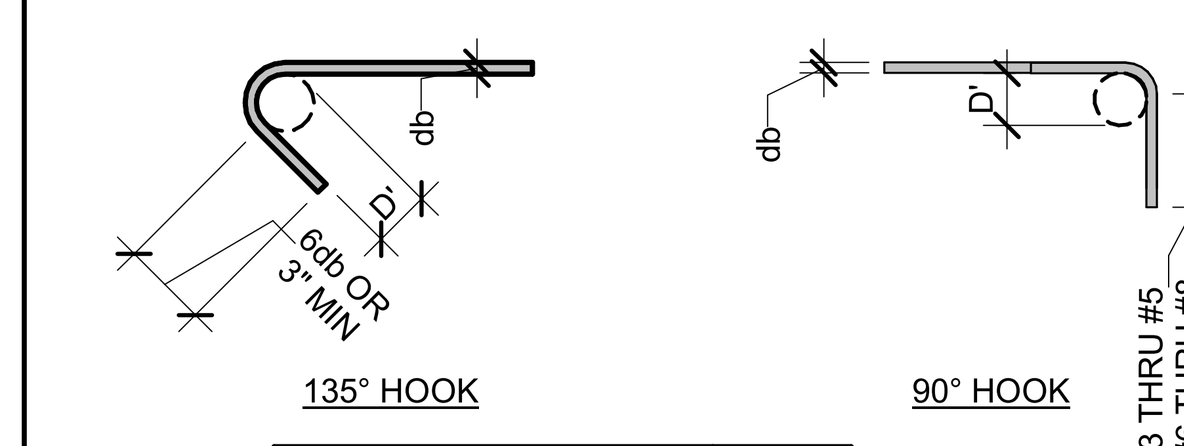

BAR SIZE	D'
#3 THRU #5	4db
#6 THRU #8	6db

D' = BEND DIAMETER

TIES & STIRRUPS HOOKS ONLY

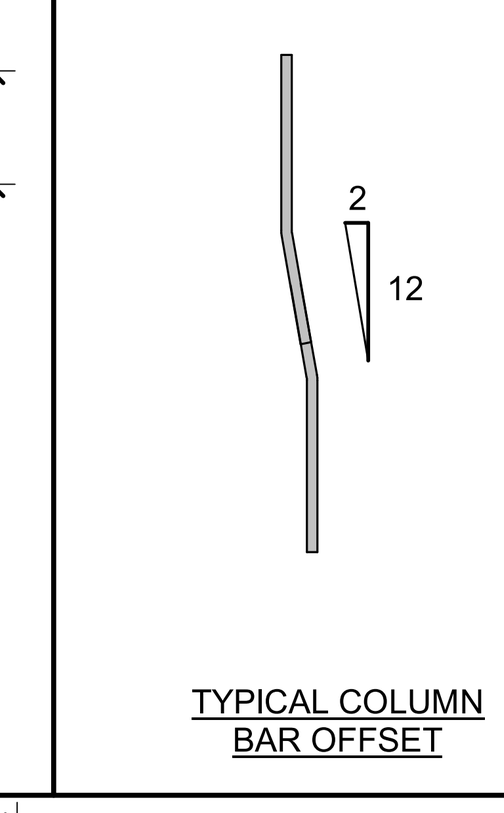

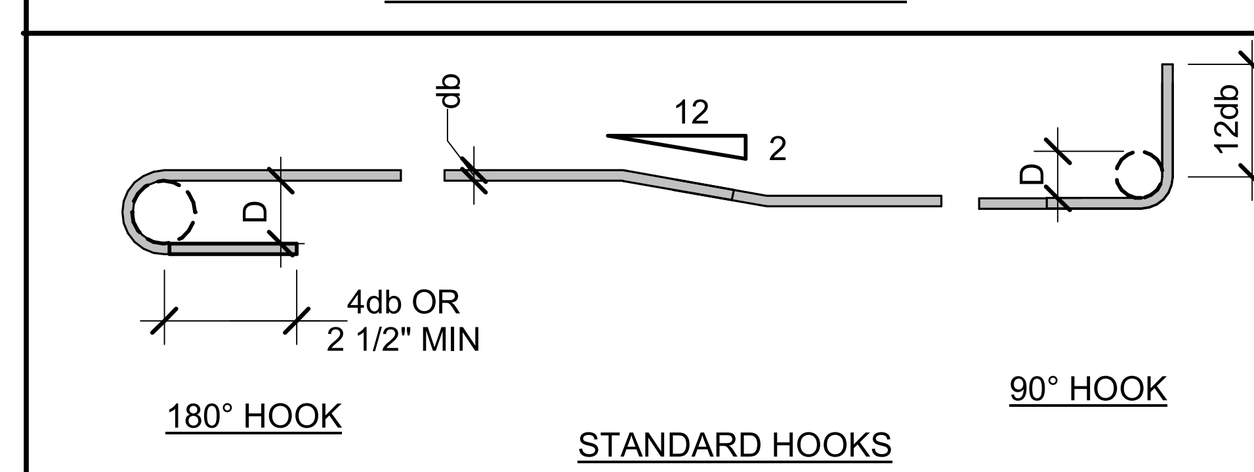

BAR SIZE	D
#3 THRU #8	6db
#9 THRU #11	8db
#14 AND #18	10db

D = BEND DIAMETER

REINFORCING BAR BENDING DETAIL — NTS — 3

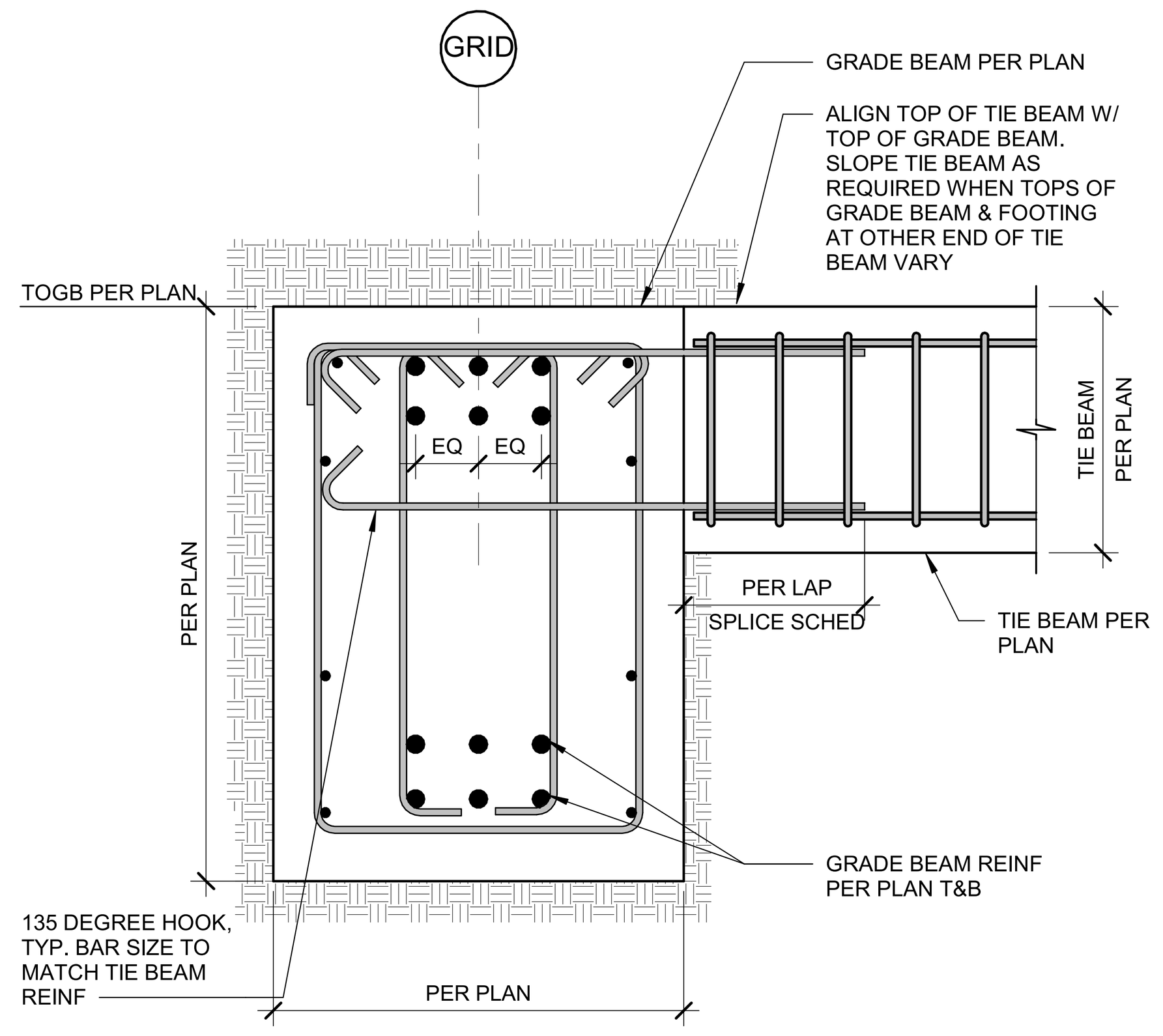

TIE BEAM CONNECTION TO GRADE BEAM — 1" = 1'-0" — 14

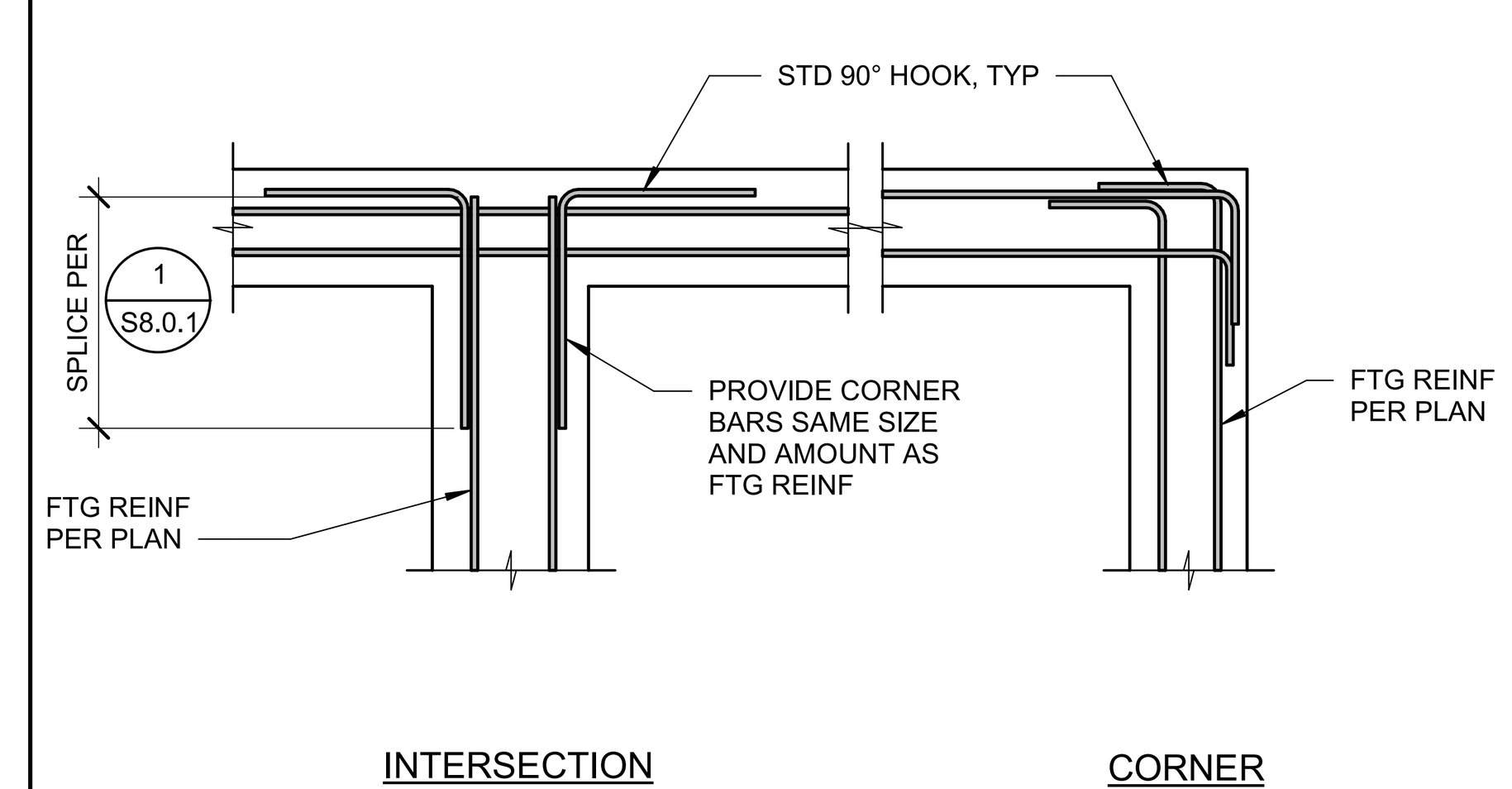

FOOTING REINFORCING AT INTERSECTION — NTS — 10

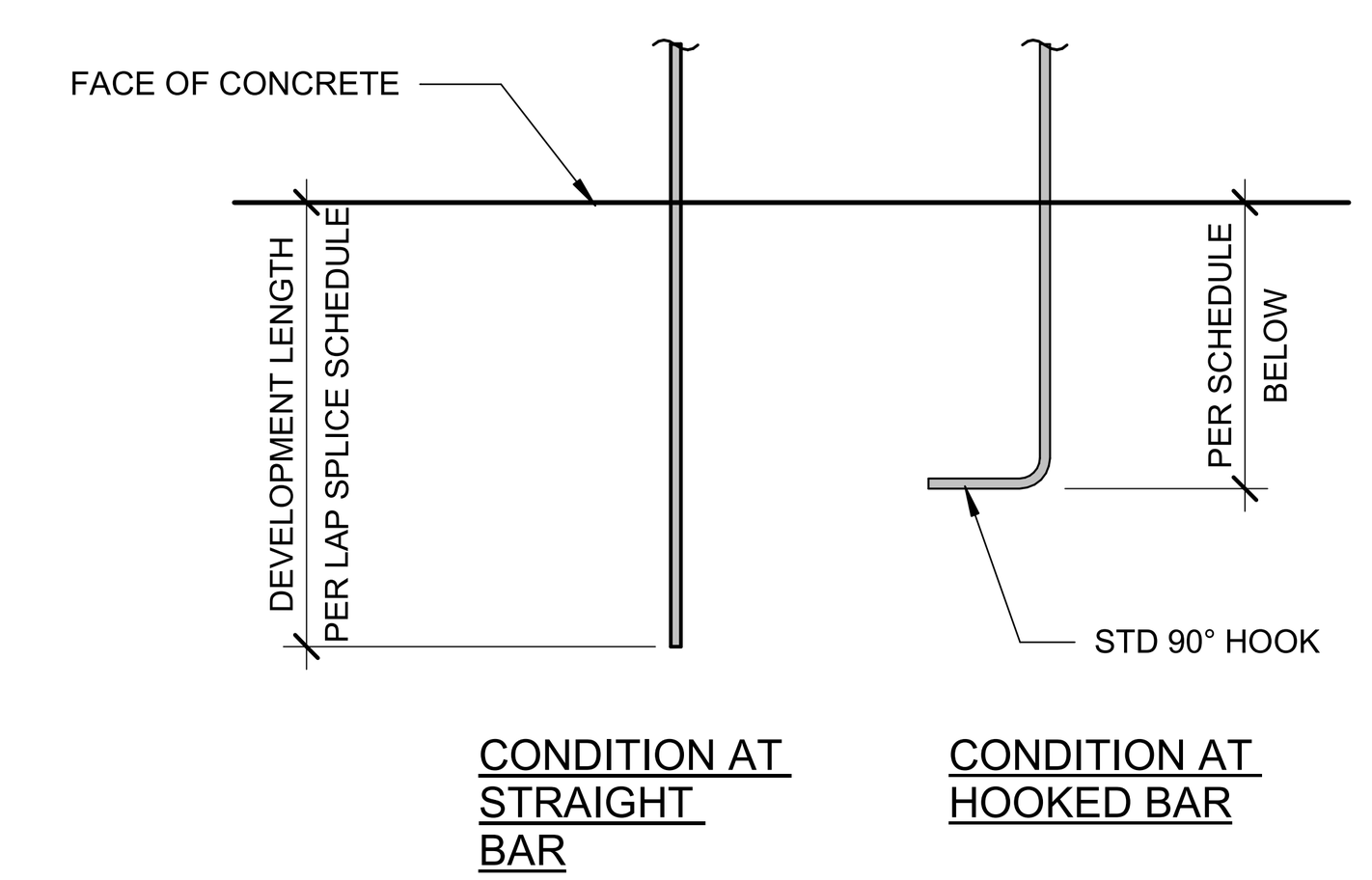

MINIMUM DEVELOPMENT LENGTH OF STANDARD HOOK FOR UNCOATED GRADE 60 REBAR				
BAR SIZE NO.	f'c (NORMAL WEIGHT CONCRETE) PSI			
	3000	4000	5000	6000
#3	9	8	7	6
#4	11	10	9	8
#5	14	12	11	10
#6	17	15	13	12
#7	20	17	15	14
#8	22	19	17	16
#9	25	22	20	18
#10	28	25	22	20
#11	31	27	24	22

NOTE:

LENGTHS SHOWN ABOVE SHALL BE MULTIPLIED BY 1.33 FOR APPLICATIONS IN LIGHTWEIGHT CONCRETE.

REBAR DEVELOPMENT LENGTH — NTS — 5

f'c (psi)	CLASS "B" TENSION LAP SPLICE LENGTH									
	BAR SIZE GR 60	3	4	5	6	7	8	9	10	11
	BAR DIAMETER, db (IN)	0.375	0.500	0.625	0.750	0.875	1.000	1.128	1.270	1.410
3000	TOP BAR	3'-0"	4'-0"	5'-0"	6'-0"	8'-9"	10'-0"	11'-4"	12'-9"	14'-1"
3000	BOTTOM BAR	2'-4"	3'-1"	3'-10"	4'-8"	6'-9"	7'-9"	8'-8"	9'-10"	10'-11"
4000	TOP BAR	2'-7"	3'-6"	4'-4"	5'-3"	7'-7"	8'-8"	9'-10"	11'-1"	12'-3"
4000	BOTTOM BAR	2'-0"	2'-8"	3'-4"	4'-0"	5'-10"	6'-8"	7'-6"	8'-6"	9'-5"
5000	TOP BAR	2'-4"	3'-2"	3'-11"	4'-8"	6'-10"	7'-10"	8'-10"	9'-11"	11'-0"
5000	BOTTOM BAR	1'-10"	2'-5"	3'-0"	3'-7"	5'-3"	6'-0"	6'-9"	7'-7"	8'-5"

NOTES:
ALL REINFORCING MUST MEET ONE OF THE FOLLOWING CASES:
A. CASE I: THE CLEAR SPACING OF THE BARS BEING DEVELOPED OR SPLICED IS NOT LESS THAN ONE BAR DIAMETER(db). THE CLEAR COVER NOT LESS THAN ONE BAR DIAMETER (db) (STIRRUPS AND TIES ARE LOCATED THROUGHOUT THE SPLICE LENGTH NOT LESS THAN CODE MINIMUM.
B. CASE II: THE CLEAR SPACING OF THE BARS BEING SPLICED IS NOT LESS THAN TWO BAR DIAMETERS (2db) AND THE CLEAR COVER IS NOT LESS THAN ONE BAR DIAMETER (db).
C. FOR ALL OTHER CASES MULTIPLY THE VALUES SHOWN BY 1.5.
D. THE ABOVE VALUES ARE FOR LIGHTWEIGHT CONCRETE.
E. THE ABOVE VALUES ARE FOR UNCOATED REINFORCEMENT.
F. TOP BARS ARE HORIZONTAL REINFORCING WITH MORE THAN 12" OF NEW CONCRETE PLACED BELOW THE BAR.
G. BOTTOM BARS ARE ALL VERTICAL BARS AND HORIZONTAL REINFORCEMENT WITH LESS THAN 12" OF NEW CONCRETE PLACED BELOW THE BAR.

LWT CONC LAP SPLICE SCHED (CLASS B) — NTS — 2

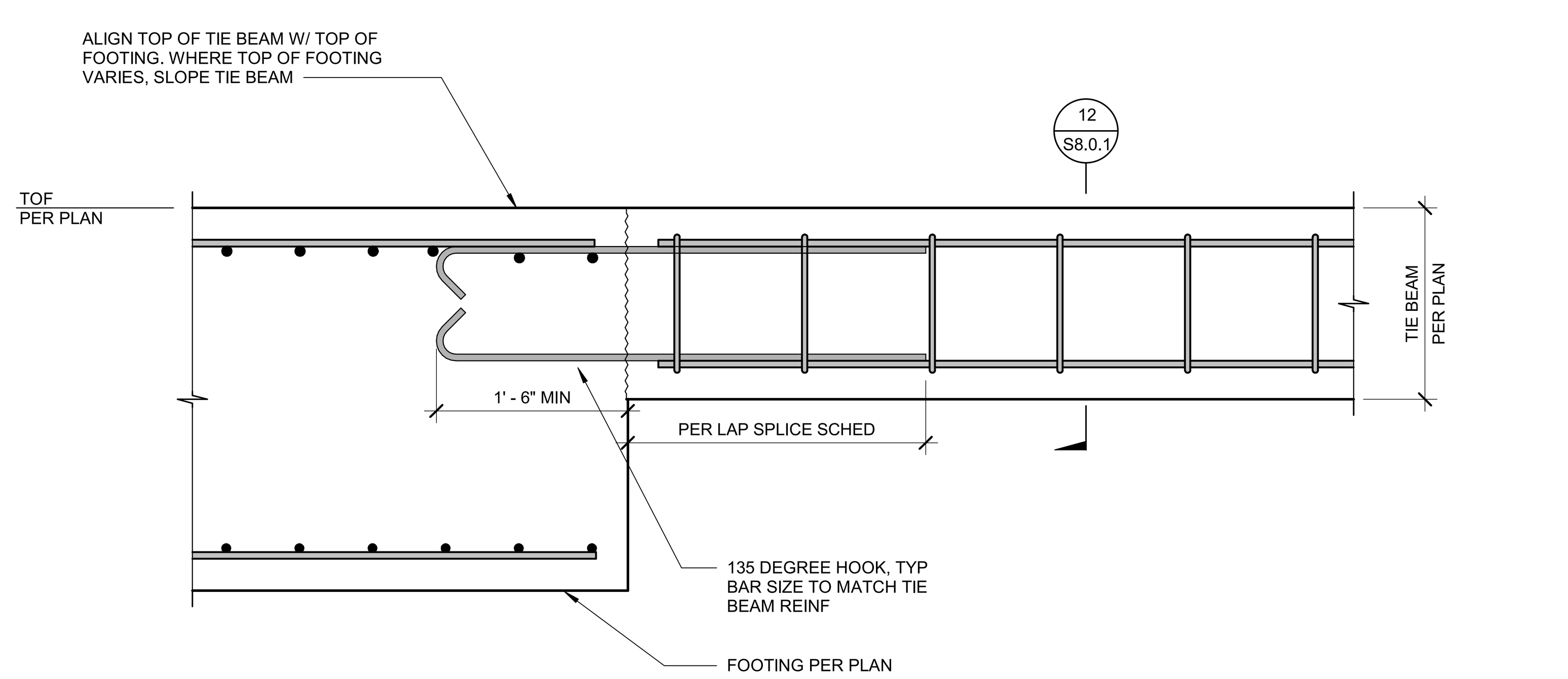

TIE BEAM CONNECTION TO SPREAD FOOTING — 1" = 1'-0" — 13

NOTES:
S = 1'-6" MAX ("S" SHALL BE A MULTIPLE OF 8" AT MASONRY WALLS (1'-4" MAX)).
D = DEPTH OF FTG

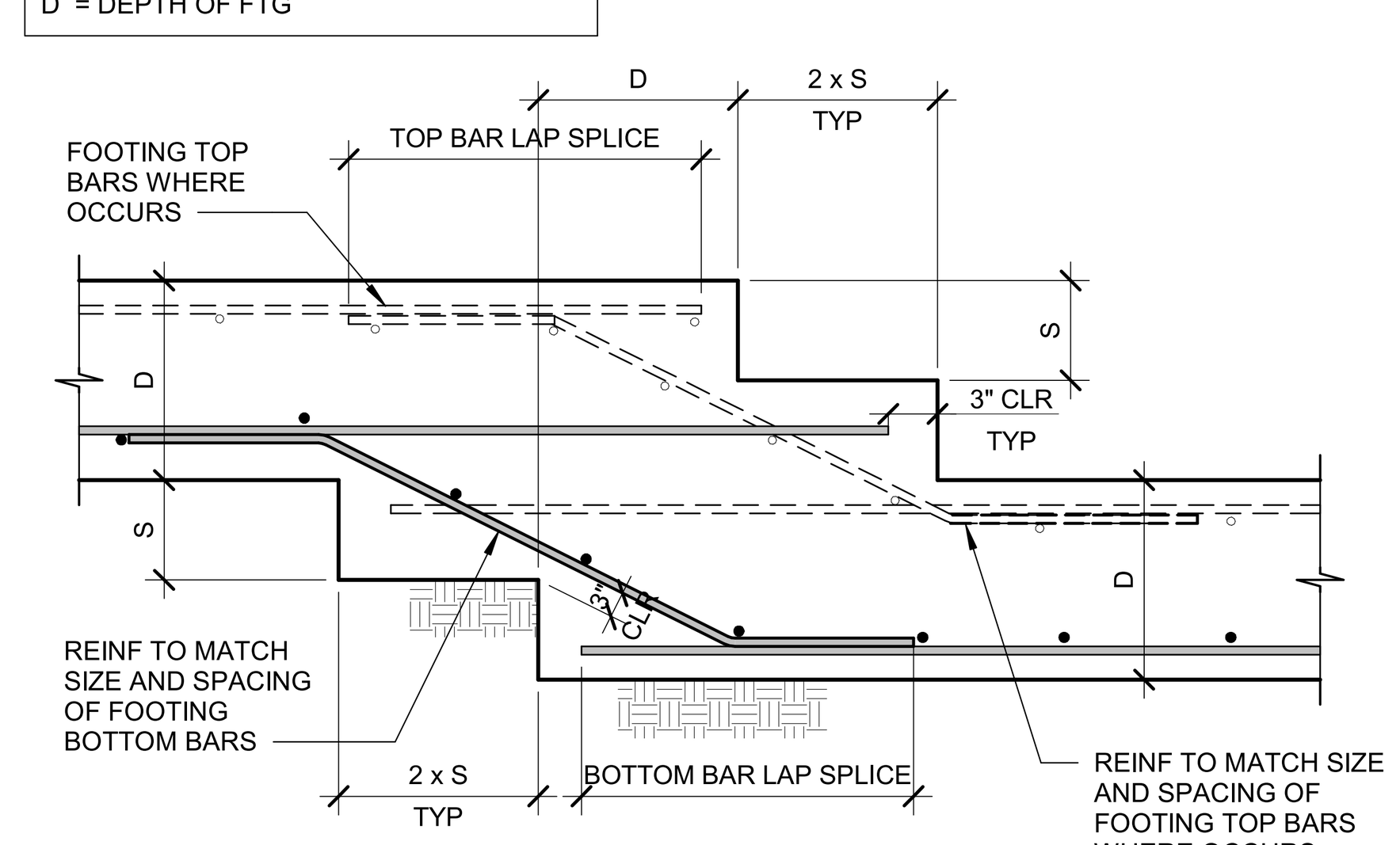

STEPPED FOOTING DETAIL — NTS — 9

f'c (psi)	CLASS "B" TENSION LAP SPLICE LENGTH									
	BAR SIZE GR 60	3	4	5	6	7	8	9	10	11
	BAR DIAMETER, db (IN)	0.375	0.500	0.625	0.750	0.875	1.000	1.128	1.270	1.410
3000	TOP BAR	2'-4"	3'-1"	3'-11"	4'-8"	6'-9"	7'-9"	8'-9"	9'-10"	10'-11"
3000	BOTTOM BAR	1'-10"	2'-5"	3'-0"	3'-7"	5'-3"	6'-0"	6'-9"	7'-7"	8'-5"
4000	TOP BAR	2'-0"	2'-8"	3'-4"	4'-1"	5'-11"	6'-9"	7'-7"	8'-6"	9'-5"
4000	BOTTOM BAR	1'-7"	2'-1"	2'-7"	3'-1"	4'-6"	5'-2"	5'-10"	6'-7"	7'-3"
5000	TOP BAR	1'-10"	2'-5"	3'-0"	3'-8"	5'-3"	6'-0"	6'-9"	7'-7"	8'-6"
5000	BOTTOM BAR	1'-5"	1'-10"	2'-4"	2'-10"	4'-1"	4'-8"	5'-3"	5'-10"	6'-6"

NOTES:
ALL REINFORCING MUST MEET ONE OF THE FOLLOWING CASES:
A. CASE I: THE CLEAR SPACING OF THE BARS BEING DEVELOPED OR SPLICED IS NOT LESS THAN ONE BAR DIAMETER(db). THE CLEAR COVER NOT LESS THAN ONE BAR DIAMETER (db) (STIRRUPS AND TIES ARE LOCATED THROUGHOUT THE SPLICE LENGTH NOT LESS THAN CODE MINIMUM.
B. CASE II: THE CLEAR SPACING OF THE BARS BEING SPLICED IS NOT LESS THAN TWO BAR DIAMETERS (2db) AND THE CLEAR COVER IS NOT LESS THAN ONE BAR DIAMETER (db).
C. FOR ALL OTHER CASES MULTIPLY THE VALUES SHOWN BY 1.5.
D. THE ABOVE VALUES ARE FOR NORMAL WEIGHT CONCRETE.
E. THE ABOVE VALUES ARE FOR UNCOATED REINFORCEMENT.
F. TOP BARS ARE HORIZONTAL REINFORCING WITH MORE THAN 12" OF NEW CONCRETE PLACED BELOW THE BAR.
G. BOTTOM BARS ARE ALL VERTICAL BARS AND HORIZONTAL REINFORCEMENT WITH LESS THAN 12" OF NEW CONCRETE PLACED BELOW THE BAR.

NWT CONC LAP SPLICE SCHED (CLASS B) — NTS — 1

SMSARCHITECTS
100 Progress | Suite 250
Irvine, California 92618
949.757.3240 | www.sms-arch.com

CONSTANT
kpff
18400 Von Karman Ave., Suite 600
Irvine, CA 92612
O: 949.252.1022
F: 949.252.8082
www.kpff.com

DANA POINT HARBOR PARTNERS

GREGORY SILVER, PE, GE 2336
GMU GEOTECHNICAL, INC.
WE HAVE REVIEWED THE PLANS AND THEY ARE IN GENERAL CONFORMANCE WITH OUR GEOTECHNICAL RECOMMENDATIONS.
x________________________

PROJECT NAME:
DANA POINT HARBOR COMMERCIAL CORE
BUILDING 12
1290 HARBOR WAY
DANA POINT, CA 92629

CLIENT
B|W|P BURNHAM|WARD PROPERTIES

REGISTERED PROFESSIONAL ENGINEER · CHRISTOPHER ANDREW DOMINAS · No. 5913 · Exp. 12/31/25 · STRUCTURAL · STATE OF CALIFORNIA

No.	DATE	ISSUE
	02/10/2023	100% DESIGN DEVELOPMENT
	04/21/2023	COUNTY RESUBMITTAL
A	07/24/2023	CITY RESUBMITTAL

DRAWINGS AND WRITTEN MATERIAL APPEARING HEREIN CONSTITUTE ORIGINAL AND UNPUBLISHED WORK OF SMS ARCHITECTS AND MAY NOT BE DUPLICATED, USED OR DISCLOSED WITHOUT WRITTEN CONSENT OF THE ARCHITECT

PROJECT NO. 1900799
DATE Issue Date
DRAWING TITLE
TYPICAL FOUNDATION DETAILS

DRAWING NO.
S8.0.1

9/8/2023 10:42:05 AM

BIM 360://10081900799 - R21 Dana Point Harbor Revitalization/1900799_DPH_Building 12-Struct.rvt

THIS PLAN HAS BEEN REVIEWED BY GMU GEOTECHNICAL, INC. FOR GENERAL CONFORMITY TO THE RECOMMENDATIONS CONTAINED IN THE PROJECT GEOTECHNICAL REPORT(S).

REVIEW OF NON-GEOTECHNICAL ENGINEERING DESIGN IS OUTSIDE OF GMU GEOTECHNICAL, INC.'S PURVIEW.

REGISTERED PROFESSIONAL ENGINEER SCOTT H WARD C95205 CIVIL STATE OF CALIFORNIA

THIS PLAN HAS BEEN REVIEWED BY GMU GEOTECHNICAL, INC. FOR GENERAL CONFORMITY TO THE RECOMMENDATIONS / CONCLUSIONS CONTAINED IN THEIR GEOTECHNICAL REPORT(S).

REVIEW OF NON-GEOTECHNICAL ENGINEERING DESIGN IS OUTSIDE THE PURVIEW OF GMU GEOTECHNICAL, INC.

ARON R. TAYLOR CEG 2488 12/7/23

PROFESSIONAL CERTIFICATION No. 2488 CERTIFIED ENGINEERING GEOLOGIST STATE OF CALIFORNIA

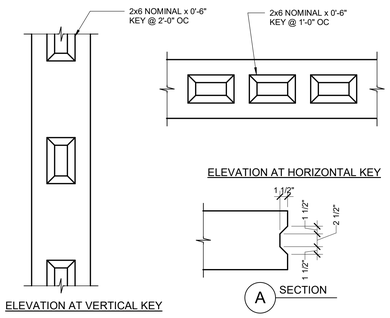

TYPICAL KEY DETAIL NTS **12**

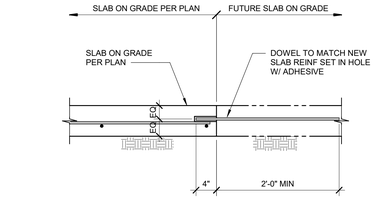

FUTURE SLAB TO SLAB NTS **8**

Zoning: CanningK **11/13/2024**

Building&Safety: OCPWAzarvandB **12/22/2025**

Permits: BNR21-0246, ELE21-0853, MEC21-0514, PLB21-0900

County of Orange - OC Public Works
OC Development Services
APPROVED

This set of plans and specifications must be kept on the job at all times. It is unlawful to make any changes or alterations to these plans without written permission from OC Public Works, OC Development Services of Orange County. The stamping of these plan specifications SHALL NOT be held to permit or be an approval of the violation of any provisions of any County Ordinance or State law.

Hani Tahtabawi
BUILDING OFFICIAL

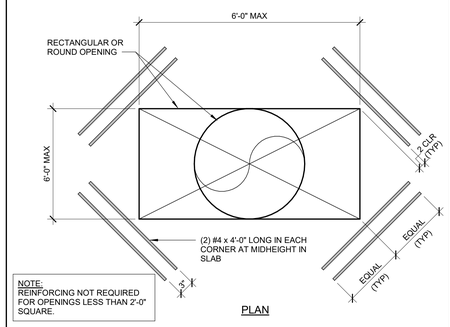

OPENING IN SLAB ON GRADE NTS **11**

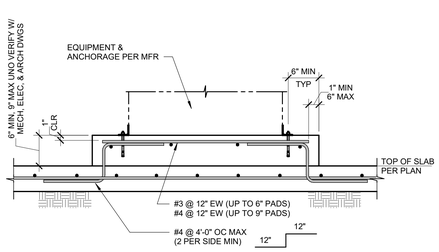

EQUIPMENT PAD ON SLAB ON GRADE NTS **7**

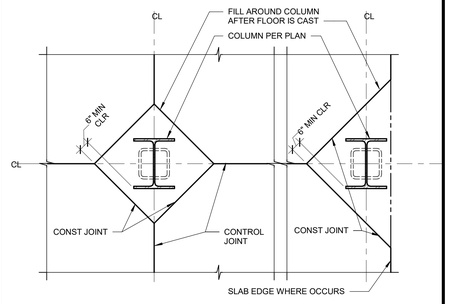

COLUMN ISOLATION AT SLAB ON GRADE NTS **3**

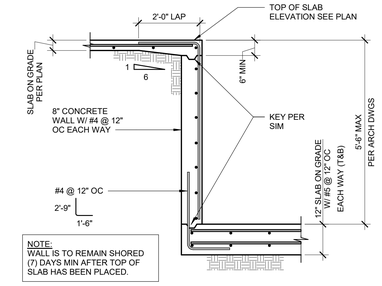

ELEVATOR PIT DETAIL NTS **10**

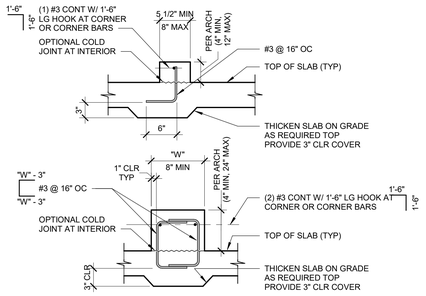

CONCRETE CURB ON SLAB ON GRADE NTS **6**

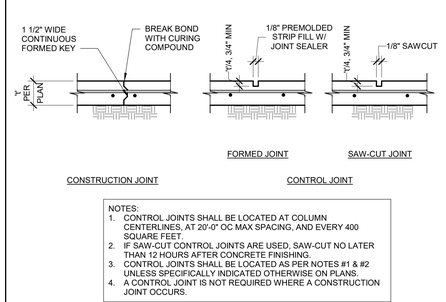

SLAB ON GRADE CONTROL JOINTS NTS **2**

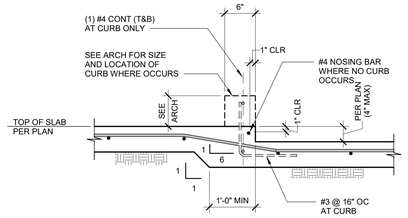

DEPRESSION ON SLAB ON GRADE NTS **9**

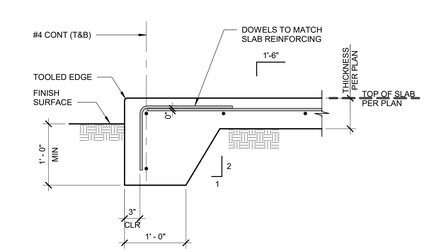

EDGE OF SLAB ON GRADE NTS **5**

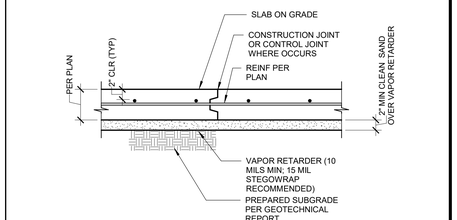

NOTES:
1. SLAB SUBGRADE SHOULD BE THE INSTALLED LOAD TRANSFER PLATFORM (LTP) APPROVED BY THE SOILS ENGINEER (GMU) PRIOR TO THE PLACEMENT OF THE VAPOR BARRIER).

TYPICAL SLAB ON GRADE NTS **1**

SMSARCHITECTS
100 Progress | Suite 250
Irvine, California 92618
949.757.3240 | www.sms-arch.com

CONSTANT
kpff
18400 Von Karman Ave., Suite 600
Irvine, CA 92612
O: 949.252.1022
F: 949.252.8082
www.kpff.com

DANA POINT HARBOR PARTNERS

GREGORY SILVER, PE, GE 2336
GMU GEOTECHNICAL, INC.
WE HAVE REVIEWED THE PLANS AND THEY ARE IN GENERAL CONFORMANCE WITH OUR GEOTECHNICAL RECOMMENDATIONS.
x_____

PROJECT NAME
DANA POINT HARBOR COMMERCIAL CORE
BUILDING 12
1290 HARBOR WAY
DANA POINT, CA 92629

CLIENT
BWP PROPERTIES
BURNHAM|WARD

REGISTERED PROFESSIONAL ENGINEER JENNIFER ANDREW BUSH No. 5913 Exp. 12/31/26 STRUCTURAL STATE OF CALIFORNIA

No.	DATE	ISSUE
	02/10/2023	100% DESIGN DEVELOPMENT
	04/21/2023	COUNTY RESUBMITTAL
A	07/24/2023	CITY RESUBMITTAL

DRAWINGS AND WRITTEN MATERIAL APPEARING HEREIN CONSTITUTE ORIGINAL AND UNPUBLISHED WORK OF SMS ARCHITECTS AND MAY NOT BE DUPLICATED, USED OR DISCLOSED WITHOUT WRITTEN CONSENT OF THE ARCHITECT

PROJECT NO 1900799
DATE Issue Date

DRAWING TITLE
TYPICAL SLAB ON GRADE DETAILS

DRAWING NO.
S8.0.2

BIM 360://1908/1900799 - R21 Dana Point Harbor Revitalization/1900799_DPH_Building 12-Struct.rvt

9/8/2023 10:42:08 AM

Zoning: CanningK 11/13/2024

Building&Safety: OCPWAzarvandB 12/22/2025

Permits: BNR21-0246, ELE21-0853, MEC21-0514, PLB21-0900

County of Orange - OC Public Works
OC Development Services
APPROVED

This set of plans and specifications must be kept on the job at all times. It is unlawful to make any changes or alterations to these plans without written permission from OC Public Works, OC Development Services of Orange County. The stamping of these plan specifications SHALL NOT be held to permit or be an approval of the violation of any provisions of any County Ordinance or State law.

Hani Tahtabaee
BUILDING OFFICIAL

SMSARCHITECTS
100 Progress | Suite 250
Irvine, California 92618
949.757.3240 | www.sms-arch.com

CONSTANT
kpff
18400 Von Karman Ave., Suite 600
Irvine, CA 92612
O: 949.252.1022
F: 949.252.8082
www.kpff.com

DANA POINT HARBOR PARTNERS

GREGORY SILVER, PE, GE 2336
GMU GEOTECHNICAL, INC.
WE HAVE REVIEWED THE PLANS AND THEY ARE IN GENERAL CONFORMANCE WITH OUR GEOTECHNICAL RECOMMENDATIONS.

x_____

PROJECT NAME
DANA POINT HARBOR COMMERCIAL CORE
BUILDING 12
1290 HARBOR WAY
DANA POINT, CA 92629

CLIENT
BWP PROPERTIES
BURNHAM|WARD

REGISTERED PROFESSIONAL ENGINEER
CHRISTOPHER ANDREW GRIVAS
No. 5913
Exp. 12/31/25
STRUCTURAL
STATE OF CALIFORNIA

No.	DATE	ISSUE
	02/10/2023	100% DESIGN DEVELOPMENT
	04/21/2023	COUNTY RESUBMITTAL
A	07/24/2023	CITY RESUBMITTAL

DRAWINGS AND WRITTEN MATERIAL APPEARING HEREIN CONSTITUTE ORIGINAL AND UNPUBLISHED WORK OF SMS ARCHITECTS AND MAY NOT BE DUPLICATED, USED OR DISCLOSED WITHOUT WRITTEN CONSENT OF THE ARCHITECT

PROJECT NO. 1900799
DATE Issue Date
DRAWING TITLE CONCRETE DETAILS

DRAWING NO.
S8.0.3

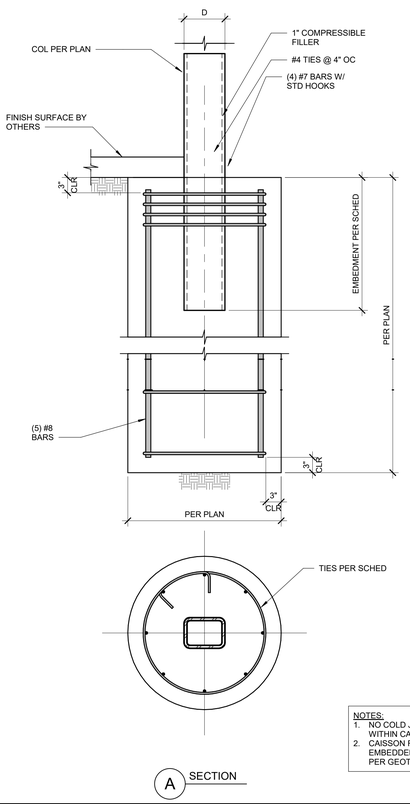

A SECTION

NOTES:
1. NO COLD JOINTS ARE PERMITTED WITHIN CAISSON FOOTING.
2. CAISSON FOOTINGS MUST BE EMBEDDED IN ENGINEERED FILL PER GEOTECHNICAL CONSULTANT.

CANOPY FOOTING 1" = 1'-0" **14**

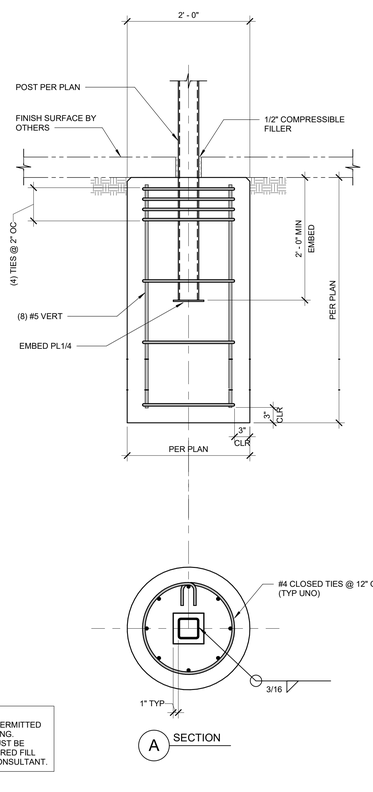

A SECTION

TRELLIS WOOD POST AT FOOTING 1" = 1'-0" **13**

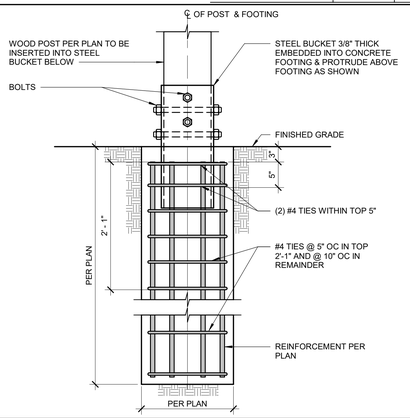

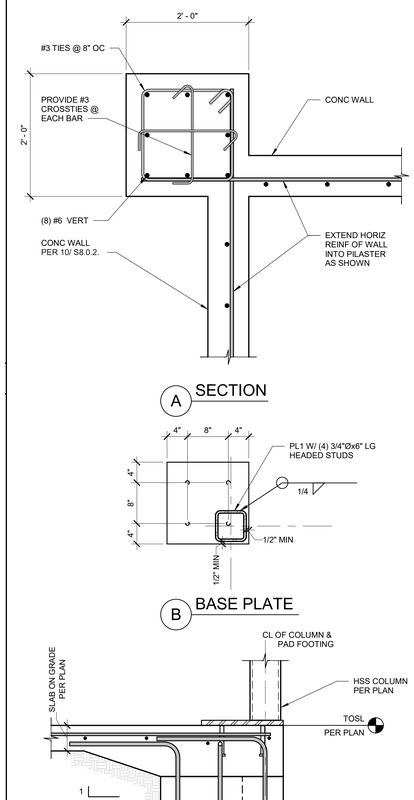

A SECTION

B BASE PLATE

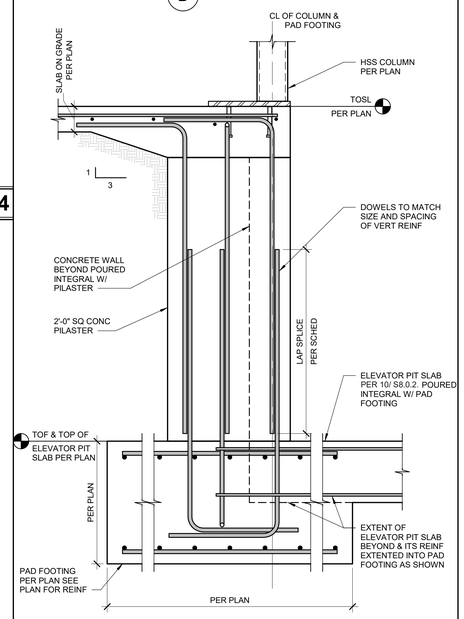

ELEVATOR PIT AT CONCRETE PILASTER 1" = 1'-0" **9**

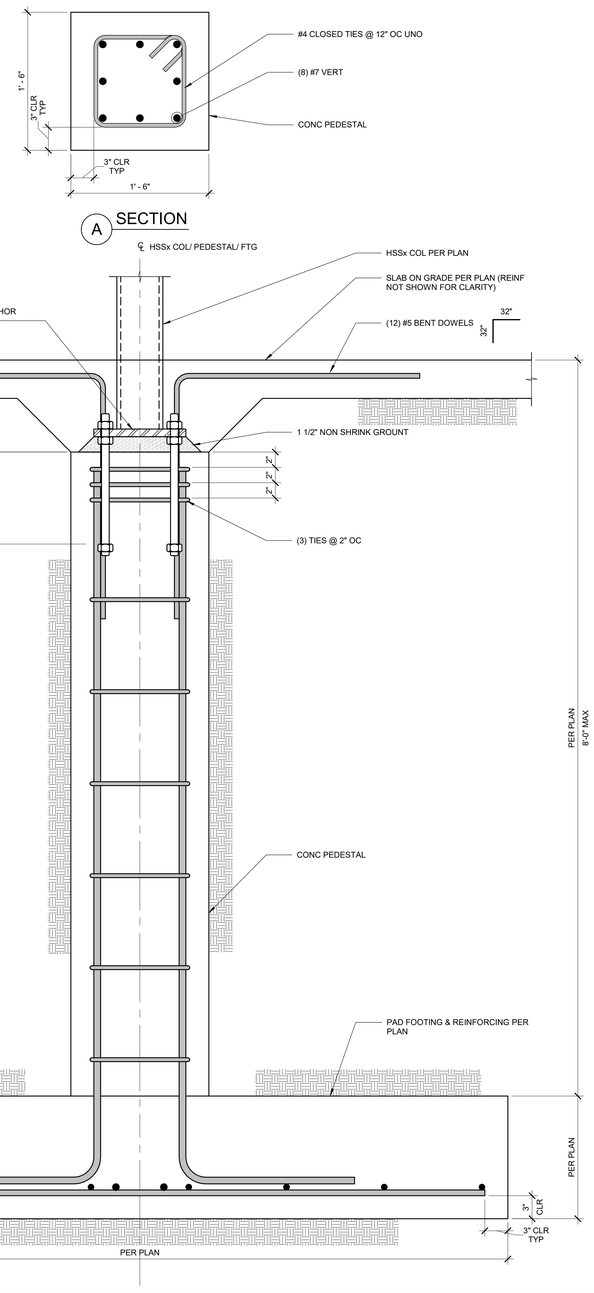

A SECTION

PEDESTAL FOOTING DETAIL 1 1/2" = 1'-0" **1**

BIM 360://1008 1900799 - 421 Dana Point Harbor Revitalization/1900799_DPH_Building 12-Struct.rvt

9/8/2023 10:42:12 AM

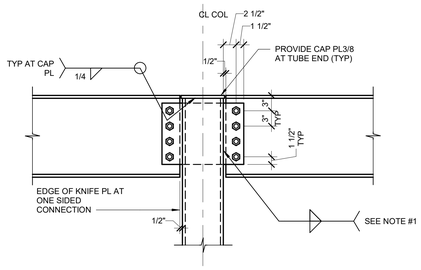

A GIRDER TO HSSx COLUMN

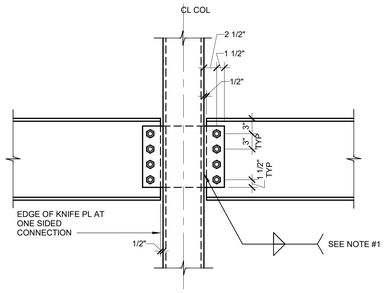

B GIRDER TO HSSx COLUMN

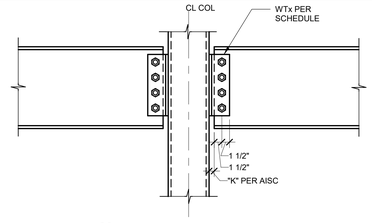

C BEAM TO HSSx COLUMN

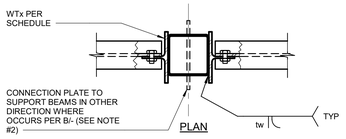

NOTES:

1. SEE STANDARD BOLTED CONNECTION SCHEDULE ON 1/- FOR SIZE & NUMBER OF BOLTS, PLATE THICKNESS, AND WELD SIZES.
2. WHERE TWO OR MORE BEAMS CONNECT AT A COLUMN, PROVIDE THE KNIFE PLATE CONNECTION AT THE BEAM THAT REQUIRES MORE BOLTS, AND PROVIDE WTx CONNECTION AT THE BEAM THAT REQUIRES LESS BOLTS.
3. SEE SCHEDULE BELOW FOR SIZE OF WTx AND WELD SIZE. NUMBER OF BOLTS SHALL BE PER THE SCHEDULE ON 1/-

BEAM SIZE	WTx SIZE	WELD SIZE (tw)
W8 / C8	WT5x9.5	1/4"
W10 / C10	WT5x9.5	1/4"
W12 / C12	WT5x9.5	1/4"
W14	WT5x9.5	1/4"
W16	WT6x25	3/8"
W18	WT6x25	3/8"
W21	WT6x25	3/8"
W24	WT6x25	3/8"

STANDARD BOLTED STEEL CONNECTIONS - HSSx COLUMNS WITH Wx BEAMS

NTS | 8

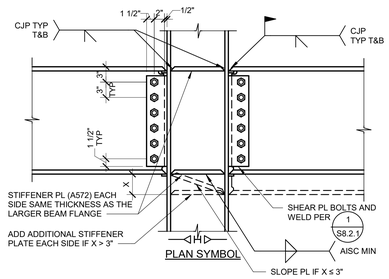

A BEAM TO Wx COLUMN

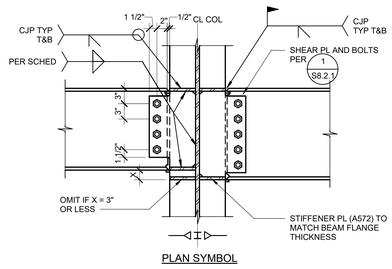

B BEAM TO Wx COLUMN

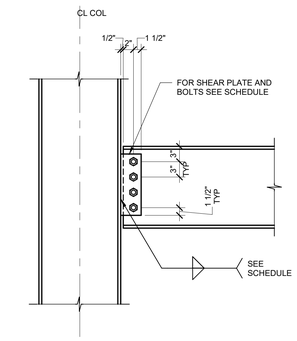

A BEAM TO COLUMN FLANGE

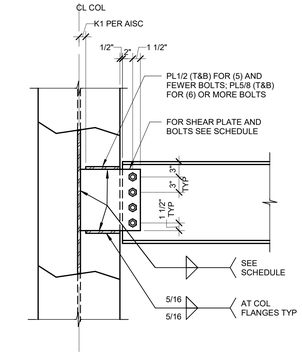

B BEAM TO COLUMN WEB

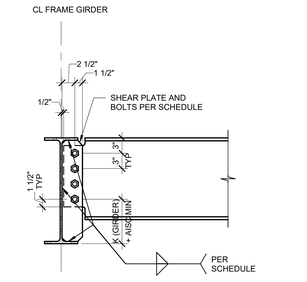

NOTE:
PROVIDE FULL HEIGHT STIFFENER PL
WHERE INDICATED ON PLANS THUS:

C FULL HEIGHT STIFFENER PLATE

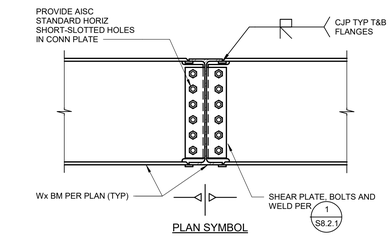

C BEAM TO Wx BEAM

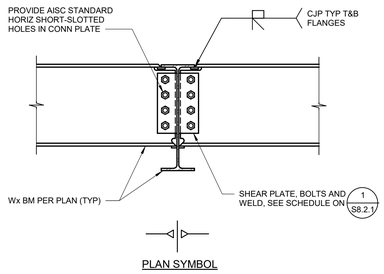

D BEAM TO Wx BEAM

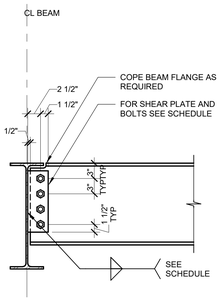

D BEAM TO BEAM

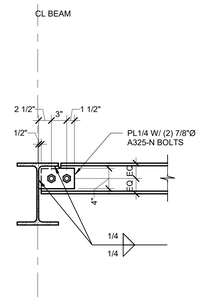

E W6x OR C6x CONNECTION

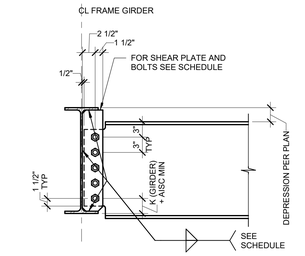

F DEPRESSED BEAM TO GIRDER

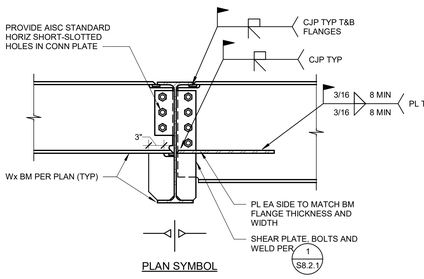

E BEAM TO Wx BEAM

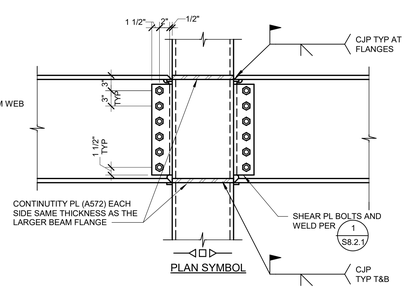

F BEAM TO HSSx COLUMN

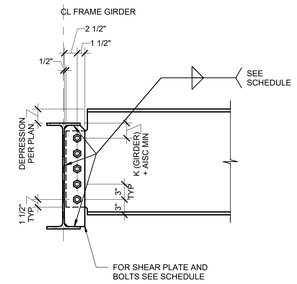

G BEAM TO DEPRESSED GIRDER

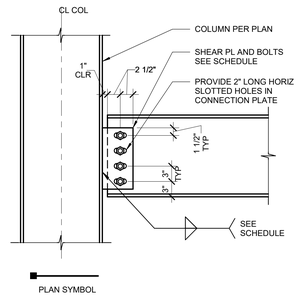

H BEAM TO COLUMN FLANGE - HORIZONTAL SLIP

NOTES:

1. TOP FLANGE AND BOTTOM FLANGE BACK-UP BARS CAN REMAIN UNLESS A FLAW IN THE WELD IS IDENTIFIED BY THE SPECIAL INSPECTOR.
2. REMOVE RUN-OFF TAB AFTER WELD IS COMPLETE.

STANDARD BOLTED CONNECTION SCHEDULE			
BEAM SIZE	NO. & SIZE OF BOLTS REQUIRED	PLATE THICKNESS	WELD SIZE
W8 / C8	(2) 7/8"Ø	1/4"	1/4"
W10 / C10	(2) 7/8"Ø	1/4"	1/4"
W12 / C12	(3) 7/8"Ø	1/4"	1/4"
W14	(3) 7/8"Ø	1/4"	1/4"
W16	(4) 7/8"Ø	3/8"	1/4"
W18	(4) 7/8"Ø	3/8"	1/4"
W21	(5) 7/8"Ø	3/8"	1/4"
W24	(6) 7/8"Ø	3/8"	5/16"
W27	(7) 7/8"Ø	3/8"	5/16"
W30	(8) 7/8"Ø	1/2"	3/8"
W33	(9) 7/8"Ø	1/2"	3/8"
W36	(9) 7/8"Ø	1/2"	3/8"

1. ALL BOLTS TO BE ASTM A325-N IN A SNUG-TIGHTENED JOINT, UNO.
2. CONNECTION PLATES TO HAVE AISC STANDARD ROUND OR HORIZONTAL SHORT-SLOTTED HOLES, UNO.
3. ALL CONNECTION PLATE MATERIAL TO BE A36, UNO.
4. [#] SHOWN ON PLANS INDICATES NUMBER OF BOLTS REQUIRED. IF NOT SHOWN THEN USE THE NUMBER OF BOLTS SHOWN IN THE TABLE ABOVE.

GRAVITY MOMENT CONNECTIONS

1" = 1'-0" | 13

STANDARD BOLTED STEEL CONNECTIONS - Wx COLUMNS & BEAMS

NTS | 1

Zoning: CanningK 11/13/2024

Building&Safety: OCPWAzarvandB 12/22/2025

Permits: BNR21-0246, ELE21-0853, MEC21-0514, PLB21-0900

County of Orange - OC Public Works
OC Development Services
APPROVED

This set of plans and specifications must be kept on the job at all times. It is unlawful to make any changes or alterations to these plans without written permission from OC Public Works, OC Development Services of Orange County. The stamping of these plan specifications SHALL NOT be held to permit or be an approval of the violation of any provisions of any County Ordinance or State law.

Hind Tahtabaee
BUILDING OFFICIAL

SMSARCHITECTS
100 Progress | Suite 250
Irvine, California 92618
949.757.3240 | www.sms-arch.com

CONSTANT
kpff
18400 Von Karman Ave.,
Suite 600
Irvine, CA 92612
O: 949.252.1022
F: 949.252.8082
www.kpff.com

DANA POINT HARBOR PARTNERS

PROJECT NAME
DANA POINT HARBOR COMMERCIAL CORE
BUILDING 12
1290 HARBOR WAY
DANA POINT, CA 92629
CLIENT
BWP PROPERTIES
BURNHAM|WARD

REGISTERED PROFESSIONAL ENGINEER
CHRISTOPHER ANDREW SHOAF
No. 5913
Exp. 12/31/25
STRUCTURAL
STATE OF CALIFORNIA

No.	DATE	ISSUE
	02/10/2023	100% DESIGN DEVELOPMENT
	04/21/2023	COUNTY RESUBMITTAL
A	07/24/2023	CITY RESUBMITTAL

DRAWINGS AND WRITTEN MATERIAL APPEARING HEREIN CONSTITUTE ORIGINAL AND UNPUBLISHED WORK OF SMS ARCHITECTS AND MAY NOT BE DUPLICATED, USED OR DISCLOSED WITHOUT WRITTEN CONSENT OF THE ARCHITECT

PROJECT NO 1900799
DATE Issue Date
DRAWING TITLE
TYPICAL STEEL DETAILS

DRAWING NO
S8.2.1

BIM 360://1008 1900799 - R21 Dana Point Harbor Revitalization/1900799_DPH_Building 12-Struct.rvt

9/8/2023 10:42:17 AM

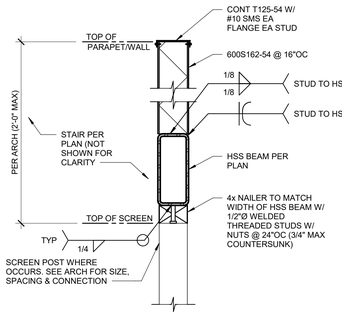

HSS BEAM AT SCREEN/PARAPET 1" = 1'-0" **20**

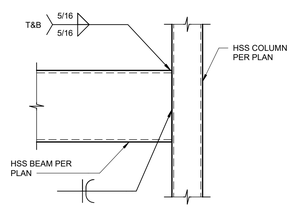

HSS BEAM-COLUMN AT SCREEN/PARAPET 1" = 1'-0" **16**

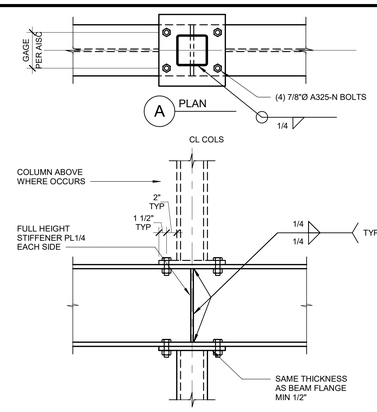

COLUMN ABOVE AND BELOW BEAM NTS **12**

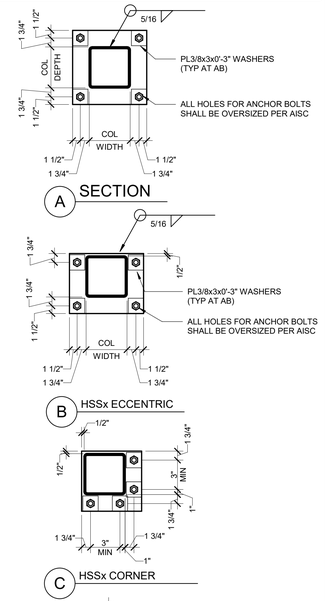

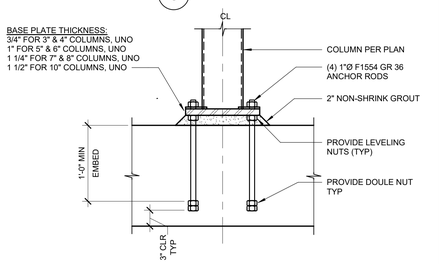

NON-FRAME HSSx COLUMN BASEPLATE NTS **7**

Zoning: CanningK 11/13/2024

Building&Safety: OCPWAzarvandB 12/22/2025

Permits: BNR21-0246, ELE21-0853, MEC21-0514, PLB21-0900

County of Orange - OC Public Works
OC Development Services
APPROVED

This set of plans and specifications must be kept on the job at all times. It is unlawful to make any changes or alterations to these plans without written permission from OC Public Works, OC Development Services of Orange County. The stamping of these plan specifications SHALL NOT be held to permit or be an approval of the violation of any provisions of any County Ordinance or State law.

Hind Tahtabaee
BUILDING OFFICIAL

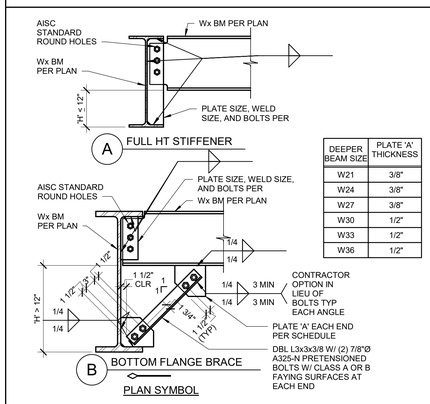

DEEPER BEAM SIZE	PLATE 'A' THICKNESS
W21	3/8"
W24	3/8"
W27	3/8"
W30	1/2"
W33	1/2"
W36	1/2"

BOTTOM FLANGE BRACE NTS **3**

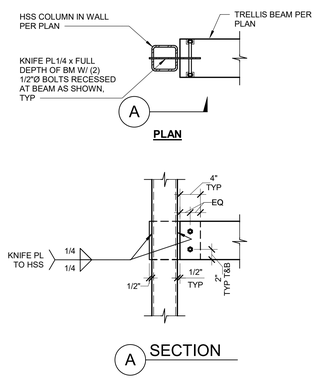

TRELLIS BM TO POST CONN AT EXT WALL 1" = 1'-0" **19**

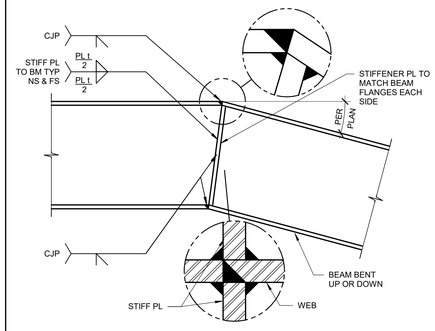

BENT Wx BEAM DETAIL 1" = 1'-0" **15**

ANCHOR ROD	WASHER SIZE	WELD SIZE 'A'
3/4" DIA	PL1/2x2x0'-2"	1/4
1" DIA	PL1/2x3x0'-3"	1/4
1 1/4" DIA	PL1/2x3x0'-3"	5/16
1 1/2" DIA	PL1/2x4x0'-4"	5/16

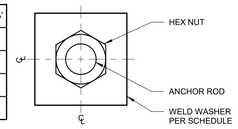

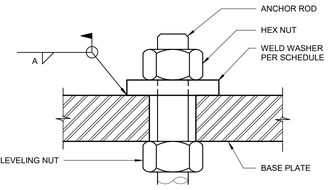

TYPICAL WELD WASHERS NTS **11**

BOTTOM FLANGE BRACE NTS **2**

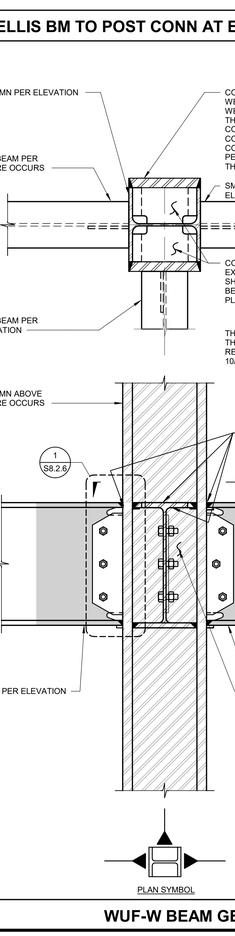

WUF-W BEAM GEOMETRY 1" = 1'-0" **17**

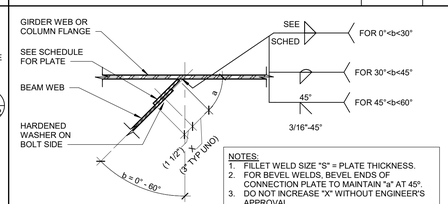

NOTES:
1. FILLET WELD SIZE "S" = PLATE THICKNESS.
2. FOR BEVEL WELDS, BEVEL ENDS OF CONNECTION PLATE TO MAINTAIN "a" AT 45°.
3. DO NOT INCREASE "X" WITHOUT ENGINEER'S APPROVAL.
4. * - USE HORIZONTAL SHORT SLOTTED HOLES IN PLATE AT COLUMN CONNECTIONS ONLY.

SKEWED BEAM CONNECTION SCHEDULE				
BEAM SIZE	NO.& SIZE OF BOLTS REQUIRED	PLATE THICKNESS	WELD FOR 0°<b<10°	WELD FOR 10°<b<30°
W8	(2) 7/8"Ø	5/16"	S / S+1/16"	S / S+1/8"
W10	(2) 7/8"Ø W/ 4"GA	5/16"		
W12	(3) 7/8"Ø	5/16"		
W14	(3) 7/8"Ø	5/16"		
W16	(4) 7/8"Ø	5/16"		
W18	(4) 7/8"Ø	5/16"		
W21	(5) 7/8"Ø	5/16"		
W24	(6) 7/8"Ø	3/8"		
W27	(7) 7/8"Ø	3/8"		
W30	(8) 7/8"Ø	7/16"		
W33	(9) 7/8"Ø*	1/2"	S / S+1/8"	45°
W36	(9) 7/8"Ø*	1/2"		

SKEWED BEAM CONNECTION 1/2" = 1'-0" **14**

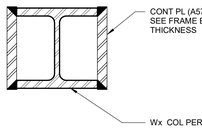

BUILD UP WUF-W DETAIL 1" = 1'-0" **13**

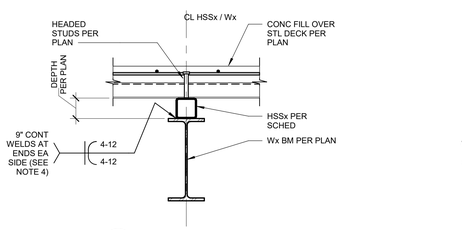

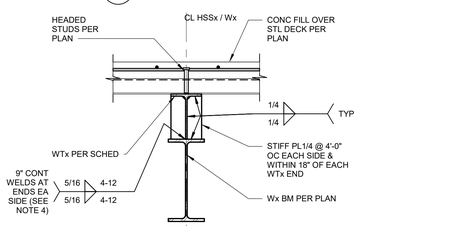

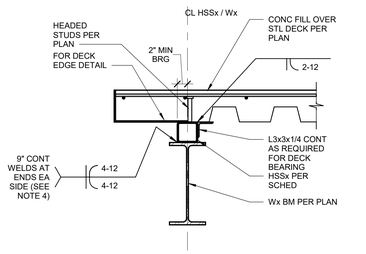

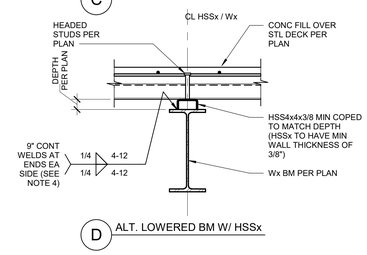

HSSx SCHEDULE	
DEPTH	MIN HSSx SIZE (SEE NOTE 3)
2"	HSS4x2x3/8
2 1/2"	SEE DETAIL D/-
3"	HSS4x3x3/8
4"	HSS4x4x3/8
5"	HSS5x4x3/8
6"	HSS6x4x3/8
NOTE: REFER TO DETAIL D/- FOR ALTERNATE FOR DEPTHS OF 3" OR LESS.	

WTx SCHEDULE	
DEPTH	WTx SIZE (SEE NOTE 1)
6 1/16" TO 9"	WT9x17.5
9 1/16" TO 12"	WT12x27.5
12 1/16" TO 15"	WT15x49.5
NOTE: REFER TO DETAIL A/- FOR DEPTHS ≤ 6"	

NOTES:
1. CUT WEB OF WTx TO MATCH DEPTH OF DEPRESSION AS REQUIRED.
2. COORDINATE LENGTH OF HSSx/WTx WITH ARCH DWGS.
3. SEE DETAIL PLACEMENT. 9 S8.2.4 & 11 S8.2.4 FOR HEADED STUD
4. USE 8" LONG WELDS EA SIDE @ 12" OC IN LIEU OF 4" @ 12" OC WHERE Wx BM IS PART OF THE SFRS AS NOTED ON PLANS.

TYPICAL DEPRESSED BEAM DETAIL NTS **5**

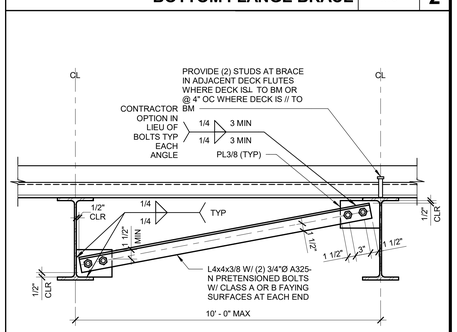

BOTTOM FLANGE BRACE NTS **1**

SMSARCHITECTS
100 Progress | Suite 250
Irvine, California 92618
949.757.3240 | www.sms-arch.com

CONSTANT
kpff
18400 Von Karman Ave., Suite 600
Irvine, CA 92612
O: 949.252.1022
F: 949.252.8082
www.kpff.com

PROJECT NAME
DANA POINT HARBOR COMMERCIAL CORE
BUILDING 12
1290 HARBOR WAY
DANA POINT, CA 92629
CLIENT
DANA POINT HARBOR PARTNERS
BWP PROPERTIES
BURNHAM|WARD

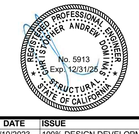

No.	DATE	ISSUE
	02/10/2023	100% DESIGN DEVELOPMENT
	04/21/2023	COUNTY RESUBMITTAL
A	07/24/2023	CITY RESUBMITTAL

DRAWINGS AND WRITTEN MATERIAL APPEARING HEREIN CONSTITUTE ORIGINAL AND UNPUBLISHED WORK OF SMS ARCHITECTS AND MAY NOT BE DUPLICATED, USED OR DISCLOSED WITHOUT WRITTEN CONSENT OF THE ARCHITECT

PROJECT NO 1900799
DATE Issue Date
DRAWING TITLE
TYPICAL STEEL DETAILS
DRAWING NO.
S8.2.2

Zoning: CanningK 11/13/2024

Building&Safety: OCPWAzarvandB 12/22/2025

Permits: BNR21-0246, ELE21-0853, MEC21-0514, PLB21-0900

County of Orange - OC Public Works
OC Development Services
APPROVED

This set of plans and specifications must be kept on the job at all times. It is unlawful to make any changes or alterations to these plans without written permission from OC Public Works, OC Development Services of Orange County. The stamping of these plan specifications SHALL NOT be held to permit or be an approval of the violation of any provisions of any County Ordinance or State law.

Hani Tahetshani
BUILDING OFFICIAL

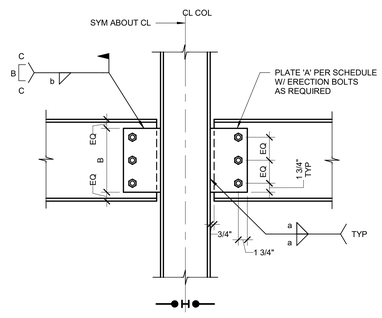

PLAN SYMBOL

F WELDED DRAG BEAM TO Wx COLUMN FLANGE

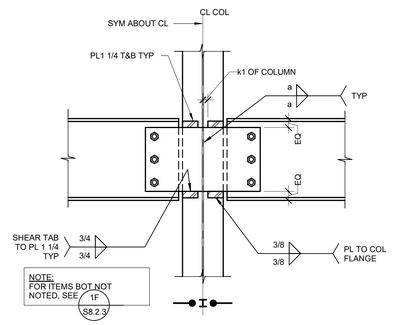

PLAN SYMBOL

G WELDED DRAG BEAM TO Wx COLUMN WEB

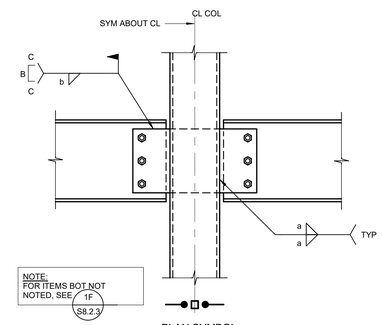

PLAN SYMBOL

H WELDED DRAG BEAM TO HSS COLUMN

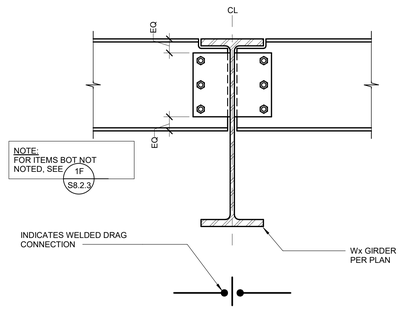

PLAN SYMBOL

J WELDED DRAG BEAM TO Wx BEAM WEB

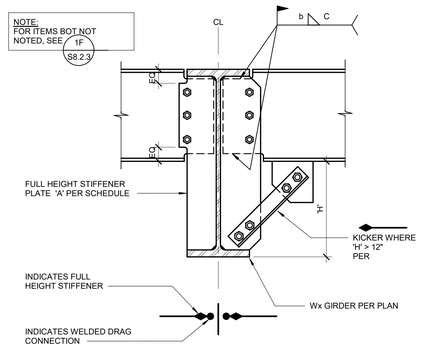

PLAN SYMBOL

K WELDED DRAG BEAM TO Wx BEAM WITH BOTTOM FLANGE BRACED

WELDED DRAG CONNECTION SCHEDULE

BEAM SIZE	PLATE 'A' THICKNESS	DIMENSION 'B'	DIMENSION 'C'	WELD 'a' SIZE	WELD 'b' SIZE
W14	5/8"	9"	8"	7/16"	3/8"
W16	5/8"	12"	8"	7/16"	3/8"
W18	5/8"	12"	8"	7/16"	3/8"
W21	5/8"	15"	8"	7/16"	3/8"
W24	5/8"	18"	8"	1/2"	1/2"
W27	3/4"	21"	8"	1/2"	1/2"
W30	3/4"	24"	8"	1/2"	1/2"
W33	3/4"	27"	8"	1/2"	1/2"
W36	3/4"	28"	8"	1/2"	1/2"
W40	3/4"	31"	8"	1/2"	1/2"

NOTES:

1. ALL BOLTS ON THIS SCHEDULE TO BE 7/8"Ø A325-N IN A SLIP CRITICAL JOINT, UNLESS NOTED OTHERWISE.
2. ALL CONNECTION PLATE MATERIAL TO BE A572 GR.50.

DRAG CONNECTIONS (PART OF THE SFRS)

NTS

1

SMSARCHITECTS
100 Progress | Suite 250
Irvine, California 92618
949.757.3240 | www.sms-arch.com

CONSTANT
kpff
18400 Von Karman Ave., Suite 600
Irvine, CA 92612
O: 949.252.1022
F: 949.252.8082
www.kpff.com

DANA POINT HARBOR PARTNERS

PROJECT NAME
DANA POINT HARBOR COMMERCIAL CORE
BUILDING 12
1290 HARBOR WAY
DANA POINT, CA 92629

CLIENT
BWP PROPERTIES
BURNHAM | WARD

REGISTERED PROFESSIONAL ENGINEER
CHRISTOPHER ANDREW SHOEMAKER
No. 5913
Exp. 12/31/25
STRUCTURAL
STATE OF CALIFORNIA

No.	DATE	ISSUE
	02/10/2023	100% DESIGN DEVELOPMENT
	04/21/2023	COUNTY RESUBMITTAL
A	07/24/2023	CITY RESUBMITTAL

DRAWINGS AND WRITTEN MATERIAL APPEARING HEREIN CONSTITUTE ORIGINAL AND UNPUBLISHED WORK OF SMS ARCHITECTS AND MAY NOT BE DUPLICATED, USED OR DISCLOSED WITHOUT WRITTEN CONSENT OF THE ARCHITECT

PROJECT NO 1900799

DATE Issue Date

DRAWING TITLE
TYPICAL STEEL DRAG DETAILS

DRAWING NO.
S8.2.3

BIM 360://1008 1900799 - R21 Dana Point Harbor Revitalization/1900799_DPH_Building 12-Struct.rvt

9/8/2023 10:42:28 AM

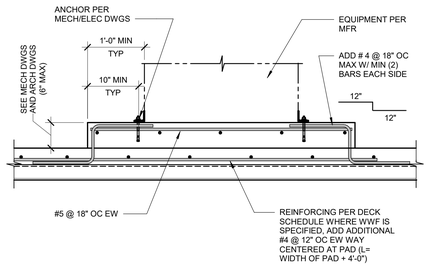

MECHANICAL PAD ON SLAB

NTS | 20

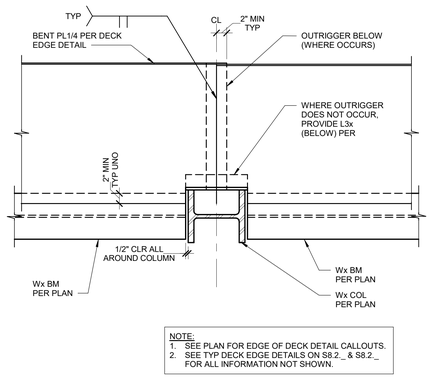

NOTE:
1. SEE PLAN FOR EDGE OF DECK DETAIL CALLOUTS.
2. SEE TYP DECK EDGE DETAILS ON S8.2_ & S8.2_ FOR ALL INFORMATION NOT SHOWN.

CLOSURE PLATE AT COLUMN

1" = 1'-0" | 16

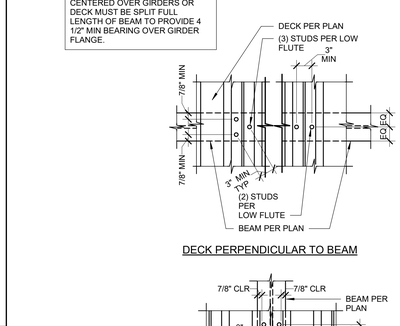

STUD SPACING ON COMPOSITE BEAM

NTS | 11

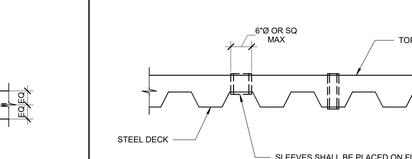

TYPICAL UNSTIFFENED DECK SLEEVE

NTS | 8

Zoning: CanningK 11/13/2024

Building&Safety: OCPWAzarvandB 12/22/2025

Permits: BNR21-0246, ELE21-0853, MEC21-0514, PLB21-0900

County of Orange - OC Public Works
OC Development Services
APPROVED
This set of plans and specifications must be kept on the job at all times. It is unlawful to make any changes or alterations to these plans without written permission from OC Public Works, OC Development Services of Orange County. The stamping of these plan specifications SHALL NOT be held to permit or be an approval of the violation of any provisions of any County Ordinance or State law.
Hani Tahtabawi
BUILDING OFFICIAL

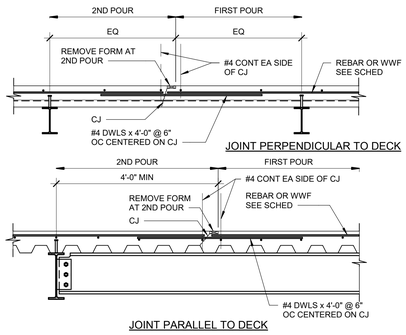

CONSTRUCTION JOINT FOR SLAB

NTS | 19

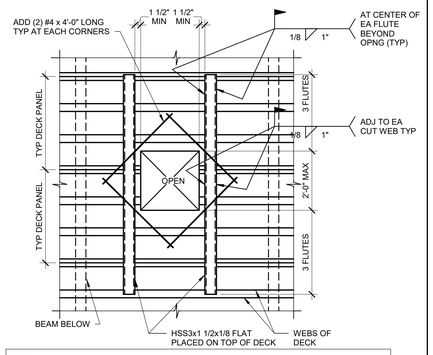

NOTE:
WHEN THE MAXIMUM DIMENSION OF AN OPENING OR OPENING GROUP EXCEEDS 24", PLACE HEADER BEAM AROUND OPENING.

DECK BLOCK OUT DETAIL

NTS | 15

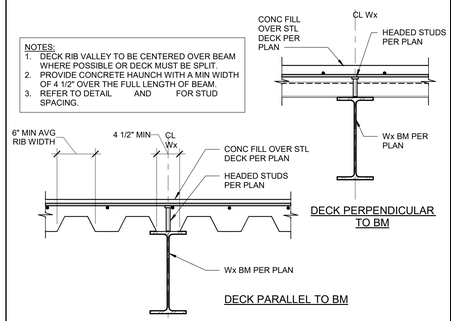

COMPOSITE BEAM TO COMPOSITE SLAB

NTS | 7

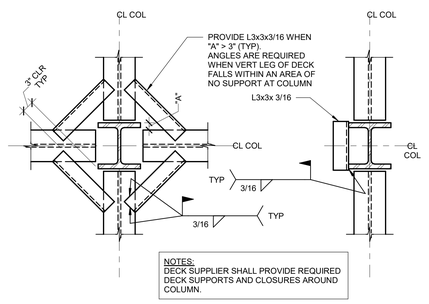

STEEL DECK SUPPORT AT COLUMN

NTS | 3

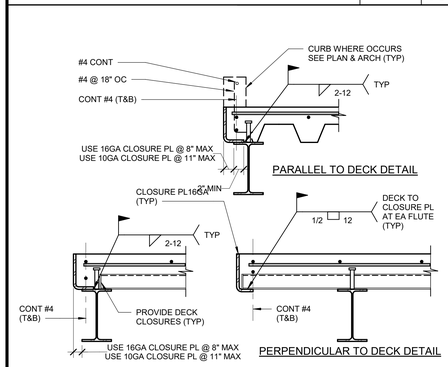

TYPICAL INTERIOR DECK EDGE DETAIL

NTS | 18

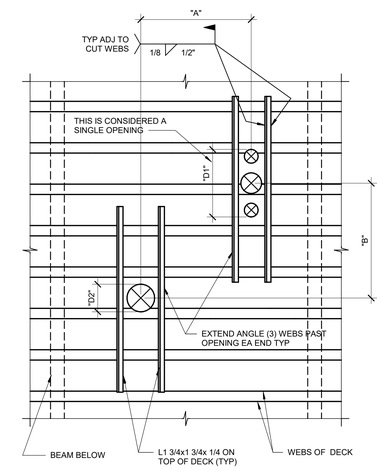

NOTES:
1. DO NOT CUT MORE THAN (2) ADJACENT WEBS.
2. HOLES LESS THAN 6"Ø AND CUTTING NO MORE THAN (1) WEB, DOES NOT REQUIRE REINFORCING SHOWN.
3. ANGLES SHALL BE PLACED ON TOP OF DECK
4. IF DIMENSION "A" IS GREATER THAN 4x"D1", 4x"D2" OR 32" WHICHEVER IS GREATER, THERE SHALL BE NO RESTRICTION OF DIMENSION "B".
5. IF DIMENSION "B" IS GREATER THAN 4x"D1", 4x"D2" OR 32" WHICHEVER IS GREATER, THERE SHALL NOT BE NO RESTRICTION ON DIMENSION "A"
6. IF DIMENSION "A" AND "B" ARE LESS THAN 4x"D1", 4x"D2" OR 32" WHICHEVER IS LARGER, THE GROUP OF OPENINGS SHALL BE CONSIDERED AS A SINGLE OPENING, AND SHALL BE REINFORCED AS REQUIRED FOR THE LARGER OPENING.

TYPICAL STIFFENED DECK SLEEVE DETAIL

NTS | 13

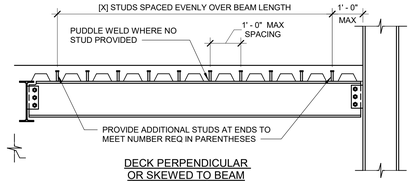

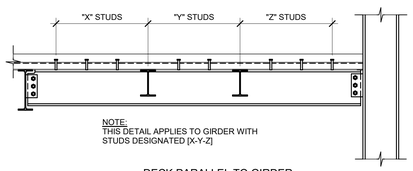

NOTES:
1. THE MINIMUM NUMBER OF STUDS REQUIRED AS "[X]" ON FRAMING PLANS OR 12" OC. WHERE STUDS ARE REQUIRED ADDITIONAL STUDS MAY BE REQUIRED TO MEET THE ABOVE MAXIMUM SPACING REQUIREMENTS.
2. IF TWO STUDS ARE REQUIRED IN ONE FLUTE, THE TRANSVERSE SPACING SHALL BE 3" MINIMUM.
3. UNLESS NOTED "[0]", ALL BEAMS AND GIRDERS THAT SUPPORT STRUCTURAL CONCRETE SHALL HAVE 3/4"Ø x 5" LONG (EFFECTIVE LENGTH) HEADED SHEAR STUDS @ 12" OC (MAX).

STUD SPACING ALONG COMPOSITE BEAM

NTS | 9

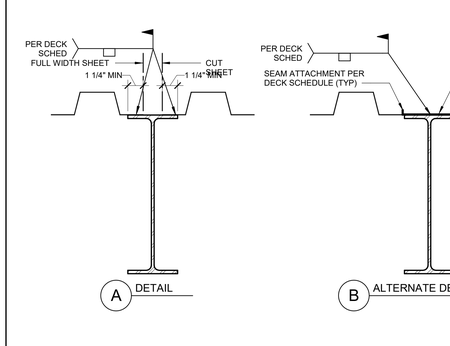

DECK ALIGNMENT / BEARING DETAIL

NTS | 2

MARK	STEEL DECK TYPE	GAGE	TOTAL THICKNESS (t)	CONCRETE TYPE	REINF	STEEL DECK WELDING PATTERN				MAX UNSHORED SPAN		
						END	INT.	EDGE	SEAM / SIDE LAP	SINGLE	DOUBLE	TRIPLE
D1	VERCO PBL 36 GRADE 50	20	1 1/2"			"(7) 3/4"Ø PUDDLE WELDS PER SHT	"(4) 3/4"Ø PUDDLE WELD PER STH	"(7) 3/4"Ø PUDDLE WELDS PER SHT	VSC2 @ 24" OC	8'-0"	10'-0"	12'-0"
D2	VERCO PBL 36 GRADE 50	18	1 1/2"			"(7) 3/4"Ø PUDDLE WELDS PER SHT	"(4) 3/4"Ø PUDDLE WELD PER STH	"(7) 3/4"Ø PUDDLE WELDS PER SHT	VSC2 @ 6" OC	8'-0"	10'-0"	12'-0"
D3	VERCO W-3 FORMLOK	18	6 1/4"	3000 PSI LTWT CONC	#4 @ 12" OC EW	"3/4"Ø PUDDLE WELD @ 12" OC	"3/4"Ø PUDDLE WELD @ 12" OC	"3/4"Ø PUDDLE WELD @ 12" OC	VSC2 @ 24" OC	12'-0"	14'-0"	14'-0"

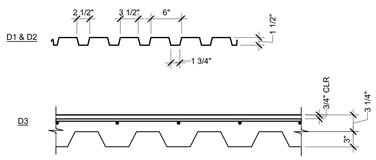

NOTES:
1. SEE GENERAL NOTES FOR MORE INFORMATION.
2. VSC2 = PUNCHLOK II SIDE LAP CONNECTION.
3. REFER TO DETAIL FOR REBAR LAP SPLICE SCHEDULE.
4. " 3/4" VISABLE DIAMETER PUDDLE WELDS (MINIMUM FUSION AREA SHALL BE 1/2" DIAMETER PUDDLE WELDS).
5. " PUDDLE WELDS MAY BE ELIMINATED WHERE THEY COINCIDE WITH HEADED SHEAR STUDS. REFER TO DETAILS AND .

STEEL DECK SCHEDULE

NTS | 1

SMSARCHITECTS
100 Progress | Suite 250
Irvine, California 92618
949.757.3240 | www.sms-arch.com

CONSTANT
kpff
18400 Von Karman Ave., Suite 600
Irvine, CA 92612
O: 949.252.1022
F: 949.252.8082
www.kpff.com

DANA POINT HARBOR PARTNERS

PROJECT NAME
DANA POINT HARBOR COMMERCIAL CORE
BUILDING 12
1290 HARBOR WAY
DANA POINT, CA 92629

CLIENT
BWP BURNHAM|WARD PROPERTIES

REGISTERED PROFESSIONAL ENGINEER
HEATHER ANDREA BOWLES
No. 5913
Exp. 12/31/25
STRUCTURAL
STATE OF CALIFORNIA

No.	DATE	ISSUE
	02/10/2023	100% DESIGN DEVELOPMENT
	04/21/2023	COUNTY RESUBMITTAL
A	07/24/2023	CITY RESUBMITTAL

DRAWINGS AND WRITTEN MATERIAL APPEARING HEREIN CONSTITUTE ORIGINAL AND UNPUBLISHED WORK OF SMS ARCHITECTS AND MAY NOT BE DUPLICATED, USED OR DISCLOSED WITHOUT WRITTEN CONSENT OF THE ARCHITECT

PROJECT NO. 1900799

DATE Issue Date

DRAWING TITLE
TYPICAL STEEL DECK DETAILS

DRAWING NO.
S8.2.4

BIM 360://1008/1900799_R21 Dana Point Harbor Revitalization/1900799_DPH_Building 12-Struct.rvt

9/8/2023 10:42:33 AM

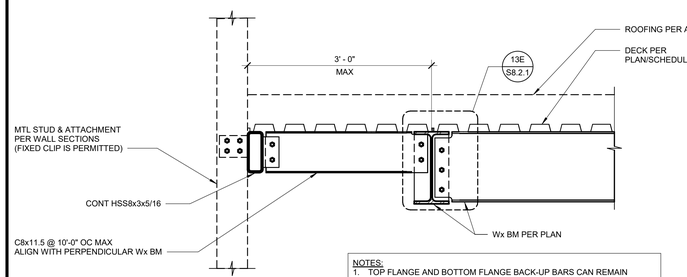

B DECK EDGE ≤ 3'-0"

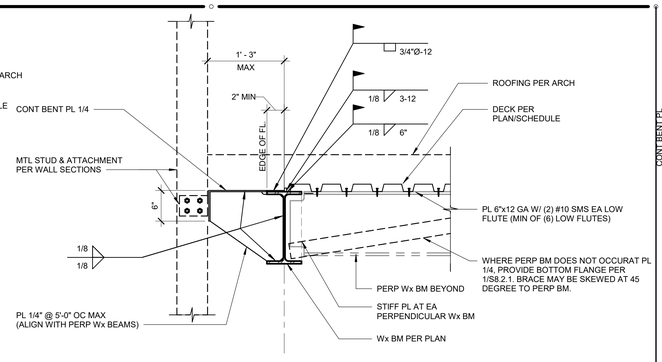

A DECK EDGE ≤ 1'-3"

EXTERIOR WALL (FIXED CONDITION) ROOF DECK EDGE | 1" = 1'-0" | **12**

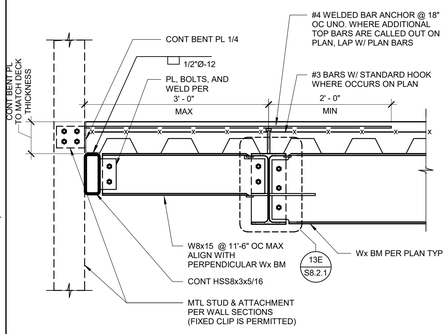

FIXED CONDITION ROOF DECK EDGE ≤ 3'-0" | 1" = 1'-0" | **8**

Zoning: CanningK 11/13/2024

Building&Safety: OCPWAzarvandB 12/22/2025

Permits: BNR21-0246, ELE21-0853, MEC21-0514, PLB21-0900

County of Orange - OC Public Works
OC Development Services
APPROVED
This set of plans and specifications must be kept on the job at all times. It is unlawful to make any changes or alterations to these plans without written permission from OC Public Works, OC Development Services of Orange County. The stamping of these plan specifications SHALL NOT be held to permit or be an approval of the violation of any provisions of any County Ordinance or State law.
Hind Tahtabaee
BUILDING OFFICIAL

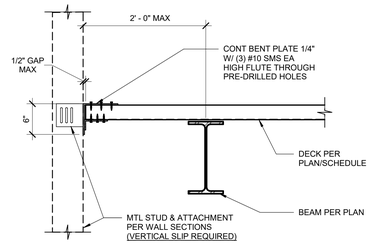

C ROOF DECK PERPENDICULAR TO DECK EDGE ≤ 2'-0"

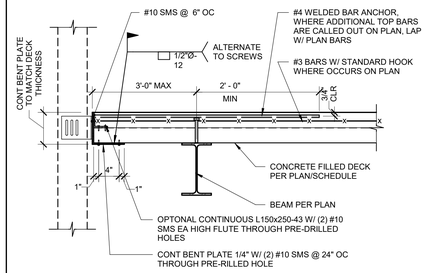

C (VERTICAL SLIP) PERPENDICULAR TO DECK EDGE ≤ 3'-0"

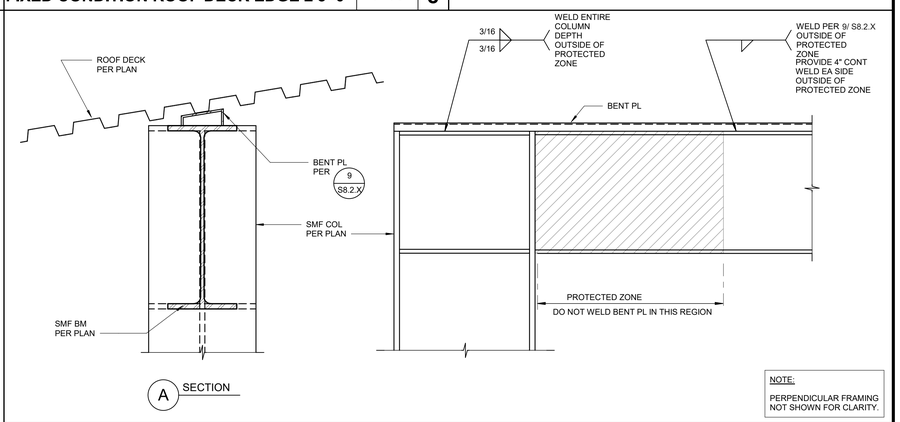

A SECTION

SLOPED ROOF DECK SUPPORT AT SMF | 1" = 1'-0" | **3**

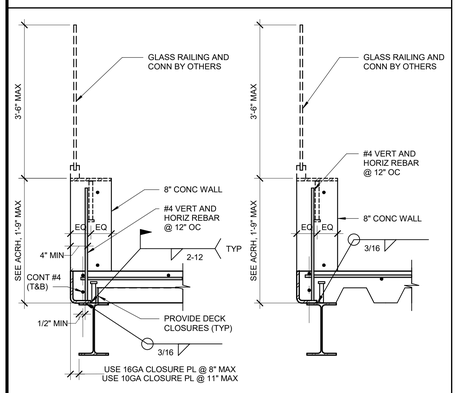

PERPENDICULAR TO DECK DETAIL PARALLEL TO DECK DETAIL

TYPICAL GUARDRAIL CONNECTION DETAIL | 1" = 1'-0" | **18**

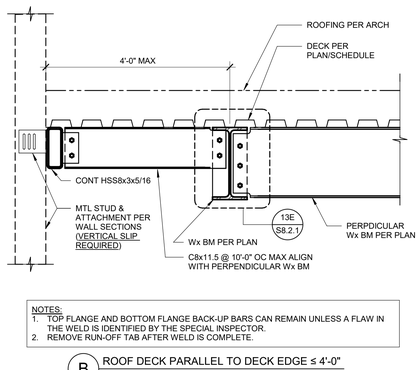

B ROOF DECK PARALLEL TO DECK EDGE ≤ 4'-0"

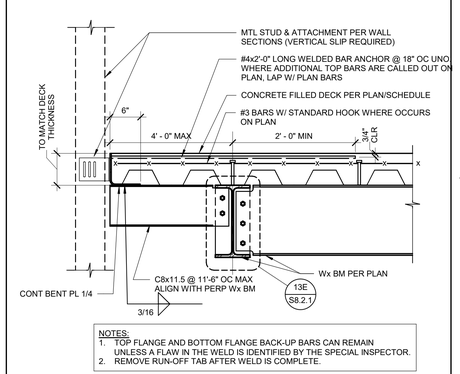

B VERTICAL SLIP TO DECK EDGE ≤ 4'-0"

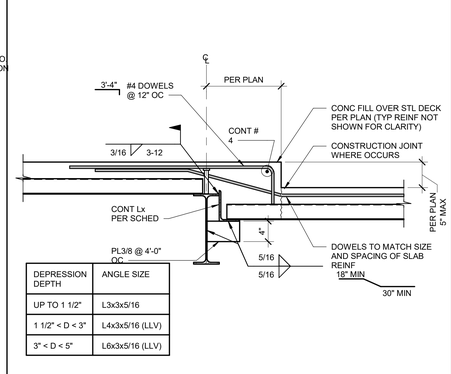

DEPRESSION DEPTH	ANGLE SIZE
UP TO 1 1/2"	L3x3x5/16
1 1/2" < D < 3"	L4x3x5/16 (LLV)
3" < D < 5"	L6x3x5/16 (LLV)

DEPRESSED SLAB PERP (5" MAX) | NTS | **6**

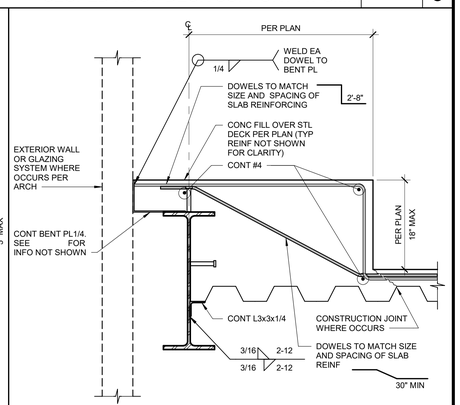

TYP DEPRESSED SLAB II (18" MAX) | NTS | **2**

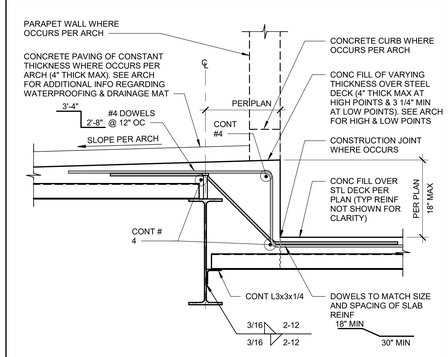

DEPRESSED SLAB PERP (18" MAX) | NTS | **5**

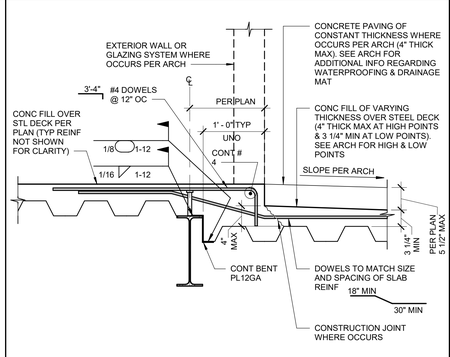

TYP DEPRESSED SLAB II (5 1/2" MAX) | NTS | **1**

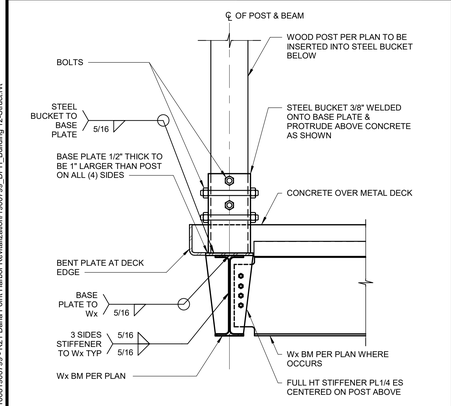

TRELLIS WOOD POST AT FLOOR | 1" = 1'-0" | **17**

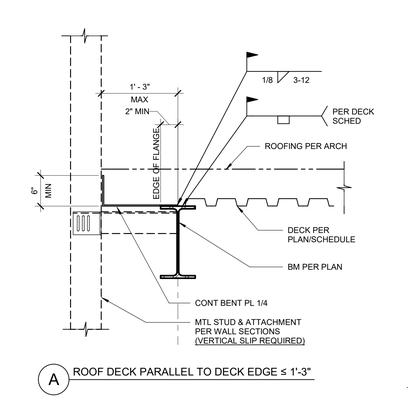

A ROOF DECK PARALLEL TO DECK EDGE ≤ 1'-3"

TYPICAL ROOF DECK EDGE | 1" = 1'-0" | **13**

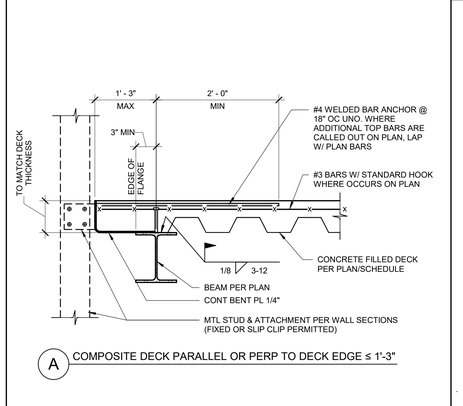

A COMPOSITE DECK PARALLEL OR PERP TO DECK EDGE ≤ 1'-3"

TYP CONC OVER MTL DECK DECK EDGE | 1" = 1'-0" | **9**

SMSARCHITECTS
100 Progress | Suite 250
Irvine, California 92618
949.757.3240 | www.sms-arch.com

CONSULTANT
kpff
18400 Von Karman Ave., Suite 600
Irvine, CA 92612
O: 949.252.1022
F: 949.252.8082
www.kpff.com

DANA POINT HARBOR PARTNERS

PROJECT NAME
DANA POINT HARBOR COMMERCIAL CORE
BUILDING 12
1290 HARBOR WAY
DANA POINT, CA 92629

CLIENT
BWP PROPERTIES
BURNHAM|WARD

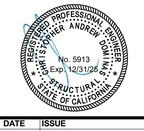

No.	DATE	ISSUE
	02/10/2023	100% DESIGN DEVELOPMENT
	04/21/2023	COUNTY RESUBMITTAL
A	07/24/2023	CITY RESUBMITTAL

DRAWINGS AND WRITTEN MATERIAL APPEARING HEREIN CONSTITUTE ORIGINAL AND UNPUBLISHED WORK OF SMS ARCHITECTS AND MAY NOT BE DUPLICATED, USED OR DISCLOSED WITHOUT WRITTEN CONSENT OF THE ARCHITECT

PROJECT NO 1900799
DATE Issue Date

DRAWING TITLE
TYPICAL STEEL DECK DETAILS

DRAWING NO.
S8.2.5

BIM 360://1900/1900799 - R21 Dana Point Harbor Revitalization/1900799_DPH_Building 12-Struct.rvt

9/8/2023 10:42:38 AM

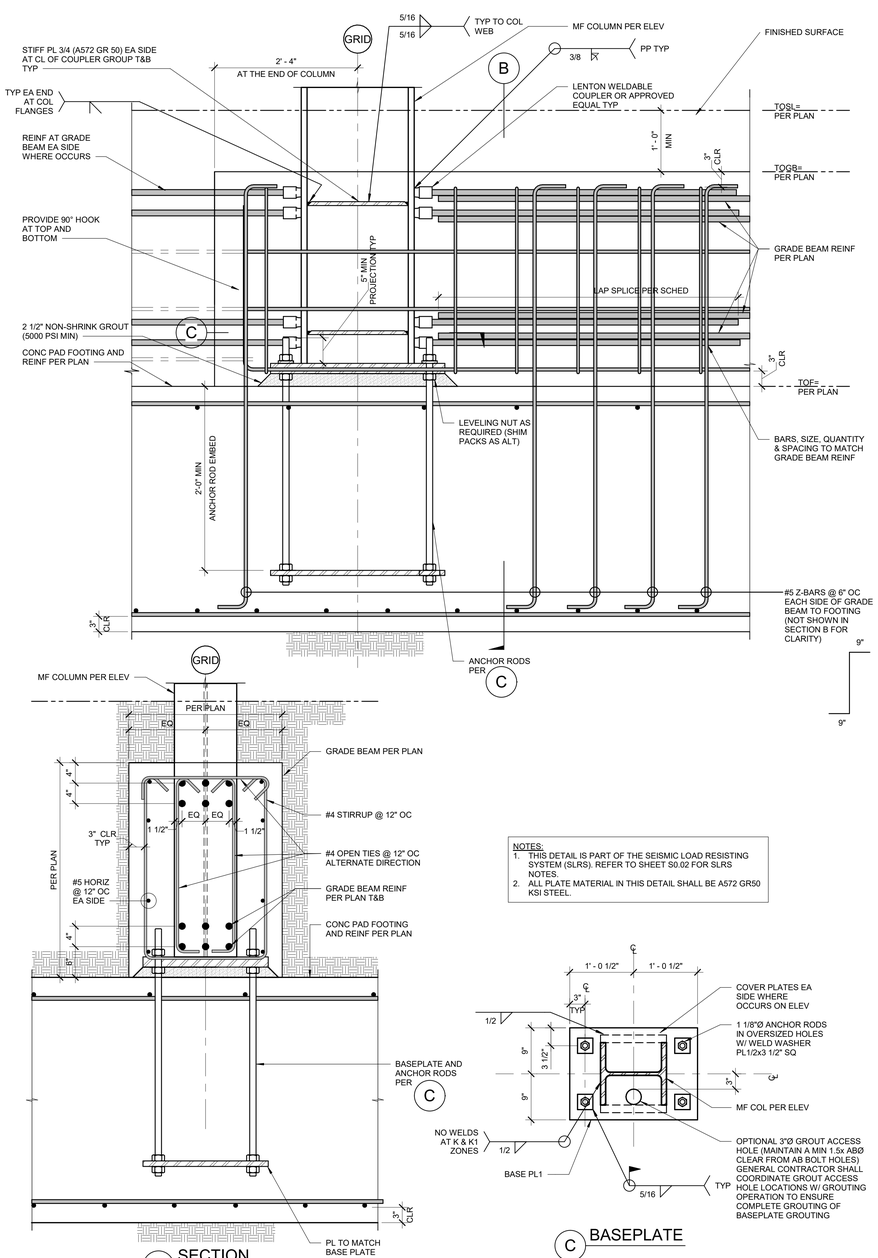

B SECTION

B SECTION

NOTES:
1. THIS DETAIL IS PART OF THE SEISMIC LOAD RESISTING SYSTEM (SLRS). REFER TO SHEET S0.02 FOR SLRS NOTES.
2. ALL PLATE MATERIAL IN THIS DETAIL SHALL BE A572 GR50 KSI STEEL.

C BASEPLATE

SPECIAL MOMENT FRAME BASE DETAILS | 1" = 1'-0" | **14**

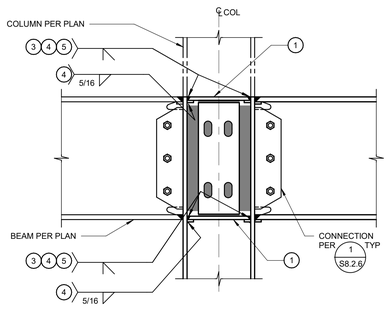

NOTES:
1. CONTINUITY PLATE AT EACH SIDE OF COLUMN WEB ALIGNED WITH TOP AND BOTTOM FRAME BEAM FLANGES. PLATE SHALL BE ASTM A572 GR. 50. PLATE THICKNESS SHALL MATCH THE THICKER FRAME BEAM FLANGE ROUNDED UP TO THE NEAREST 1/8", UNO ON FRAME ELEVATIONS.
2. EXTEND PLATE FLUSH WITH COLUMN FLANGES.
3. CJP TYP/CAL AT CONTINUITY PLATE TO COLUMN.
4. BACKING MAY BE LEFT IN PLACE. IF LEFT IN PLACE, PROVIDE CONTINUOUS WELD OF BACKING TO COLUMN FLANGE. IF BACKING IS REMOVED, THE ROOT PASS SHALL BE BACKGOUGED TO SOUND WELD MATERIAL & BACKWELDED WITH A CONTINUOUS 5/16" REINFORCING FILLET WELD.
5. WELD TABS PERMITTED AT ENDS OF COLUMN FLANGES. REMOVE WELD TABS TO 1/4" MAXIMUM FROM EDGE OF CONTINUITY PLATE. GRIND END OF WELD SMOOTH (500µ-IN). NOT FLUSH. DO NOT GOUGE COLUMN FLANGE OR CONTINUITY PLATE.
6. WELD TABS NOT PERMITTED. WELD LAYERS MAY BE TRANSITIONED AT AN ANGLE OF 45 DEGREES MAXIMUM MEASURED FROM VERTICAL. NO NDT REQUIRED AT CASCADED WELD TRANSITIONS.
7. BACKING TO BE REMOVED. THE ROOT PASS SHALL BE BACKGOUGED TO SOUND WELD MATERIAL

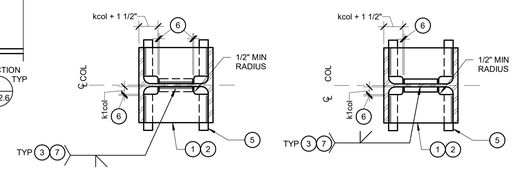

WUF-W CONTINUITY PL (W/ DOUBLER PL) | 1" = 1'-0" | **8**

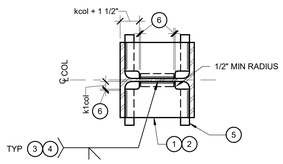

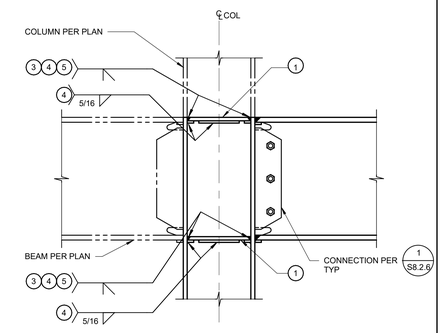

NOTES:
1. CONTINUITY PLATE AT EACH SIDE OF COLUMN WEB ALIGNED WITH TOP AND BOTTOM FRAME BEAM FLANGES. PLATE SHALL BE ASTM A572 GR. 50. PLATE THICKNESS SHALL MATCH THE THICKER FRAME BEAM FLANGE ROUNDED UP TO THE NEAREST 1/8", UNO ON FRAME ELEVATIONS.
2. EXTEND PLATE FLUSH WITH COLUMN FLANGES.
3. CJP TYPICAL AT CONTINUITY PLATE TO COLUMN.
4. BACKING MAY BE LEFT IN PLACE. IF LEFT IN PLACE, PROVIDE CONTINUOUS WELD OF BACKING TO COLUMN FLANGE. IF BACKING IS REMOVED, THE ROOT PASS SHALL BE BACKGOUGED TO SOUND WELD MATERIAL & BACKWELDED WITH A CONTINUOUS 5/16" REINFORCING FILLET WELD.
5. WELD TABS PERMITTED AT ENDS OF COLUMN FLANGES. REMOVE WELD TABS TO 1/4" MAXIMUM FROM EDGE OF CONTINUITY PLATE. GRIND END OF WELD SMOOTH (500µ-IN). NOT FLUSH. DO NOT GOUGE COLUMN FLANGE OR CONTINUITY PLATE.
6. WELD TABS NOT PERMITTED. WELD LAYERS MAY BE TRANSITIONED AT AN ANGLE OF 45 DEGREES MAXIMUM MEASURED FROM VERTICAL. NO NDT REQUIRED AT CASCADED WELD TRANSITIONS.

WUF-W CONTINUITY PL (W/O DOUBLER PL) | 1" = 1'-0" | **10**

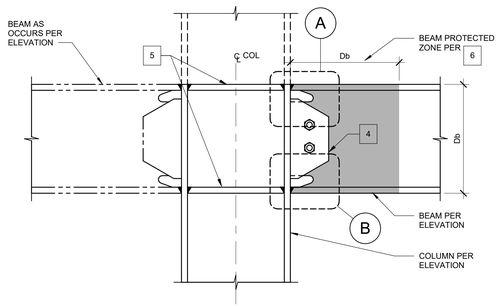

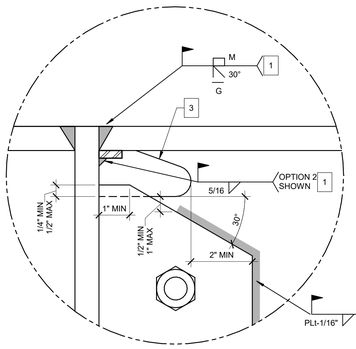

A DETAIL AT TOP FLANGE

SCALE:6"=1'-0"

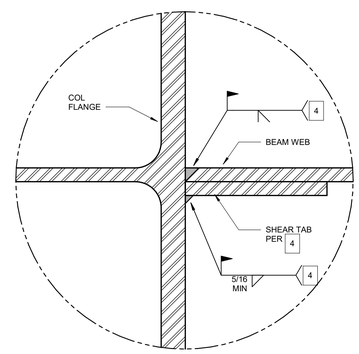

C SECTION AT BEAM WEB

SCALE:6"=1'-0"

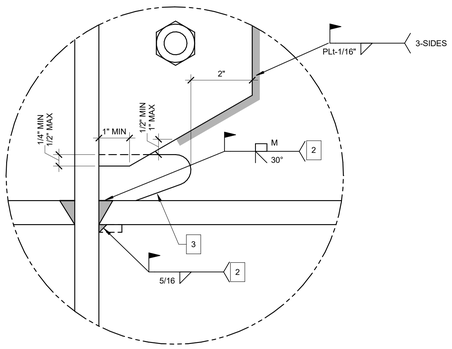

B DETAIL AT BOTTOM FLANGE

SCALE:6"=1'-0"

NOTES:
1. CJP GROOVE WELD AT TOP FLANGE: AT TOP FLANGE, EITHER (OPTION 1) REMOVE WELD BACKING, BACKGOUGE, AND ADD 5/16" MINIMUM FILLET WELD, OR (OPTION 2) LEAVE BACKING IN PLACE AND ADD 5/16" FILLET UNDER BACKING.
2. CJP GROOVE WELD AT BOTTOM FLANGE: AT BOTTOM FLANGE, REMOVE WELD BACKING, BACKGOUGE, AND ADD 5/16" MINIMUM FILLET WELD.
3. WELD ACCESS HOLE.
4. WEB CONNECTION: THE NUMBER, TYPE, AND SIZE OF ERECTION BOLTS SELECTED FOR ERECTION LOADS BY FABRICATOR. ERECTION BOLTS SHALL BE WELDED TREADED STUDS ON INSIDE FACE OF BEAM. THE SHEAR TAB LENGTH IS EQUAL TO THE DISTANCE BETWEEN THE WELD ACCESS HOLES PLUS 1/2" MIN, 1" MAX. SHEAR TAB THICKNESS SHALL BE THE SAME THICKNESS AS THE BEAM WEB (MINIMUM), AND SERVES AS BACKING FOR CJP WELD. THE STRENGTH OF THE SHEAR TAB SHALL HAVE Fy=50 KSI. WELD OF SHEAR TAB TO COLUMN FLANGE IS A FILLET SIZED FOR ERECTION LOADS (5/16" MINIMUM) ON THE SIDE AWAY FROM THE BEAM WEB. NO WELD TABS ARE REQUIRED AT THE ENDS OF THE CJP WELD.
5. FOR CONTINUITY PLATES SEE 10/ S8.2.6 & 8/ S8.2.6 .
6. NO CONNECTIONS ARE TO BE PLACED WITHIN THIS REGION.
7. SEE DETAILS 13/ S8.2.2 & 17/ S8.2.2 FOR CONDITIONS WITH COVER PLATES

WUF-W MOMENT RESISTING FRAME CONNECTION (SFRS) | 1 1/2" = 1'-0" | **1**

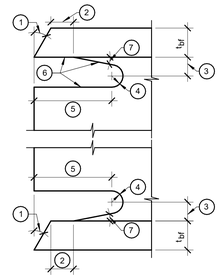

NOTES:
1. BEVEL AS REQUIRED FOR THE WPS.
2. t_{bf} OR 1/2" [12 MM], WHICHEVER IS LARGER (+1/2 t_{bf}, OR -1/4 t_{bf}).
3. THE MINIMUM DIMENSION SHALL BE 3/4 t_{bf}, OR 3/4" [20 MM], WHICHEVER IS GREATER. THE MAXIMUM DIMENSION SHALL BE t_{bf} (+1/4" [6 MM]).
4. 3/8" [10 MM] MINIMUM RADIUS (-0, +UNLIMITED).
5. 3 t_{bf} (±1/2" [12 MM]).
6. SEE AWS D1.8/D1.8M 6.11.2.1 FOR SURFACE ROUGHNESS REQUIREMENTS.
7. TOLERANCES SHALL NOT ACCUMULATE TO THE EXTENT THAT THE ANGLE OF THE ACCESS HOLE CUT TO THE FLANGE SURFACE EXCEEDS 25°.

WELD ACCESS HOLE (SFRS) | 1" = 1'-0" | **17**

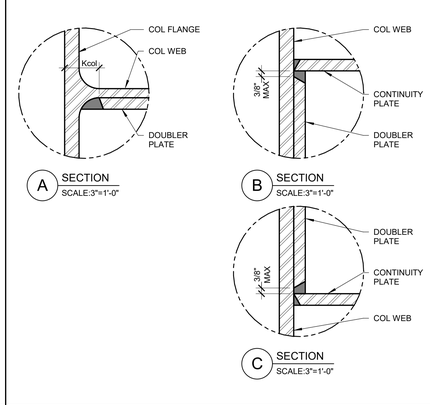

NOTES:
1. WEB DOUBLER PLATE AT ONE SIDE OF COLUMN WEB. PLATE SHALL BE ASTM A572 GR. 50. PLATE THICKNESS SHALL BE AS INDICATED ON FRAME ELEVATIONS.
2. PJP WELD PER AWS D1.8 CLAUSE 4.3 AT COLUMN 'K' EXTENDING VERTICALLY BETWEEN CONTINUITY PLATES. WELD IS PERMITTED TO STOP NO MORE THAN 1" FROM THE CONTINUITY PLATE.
3. CJP WELD TO CONTINUITY PLATE.

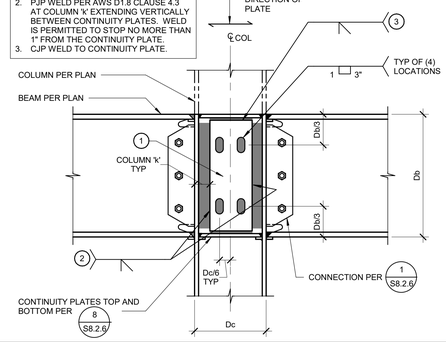

WUF-W WEB DOUBLER PL (PART OF SFRS) | 1" = 1'-0" | **9**

BIM 360://1008/1900799 - R21 Dana Point Harbor Revitalization/1900799_DPH_Building 12-Struct.rvt

Zoning: CanningK 11/13/2024

Building&Safety: OCPWAzarvandB 12/22/2025

Permits: BNR21-0246, ELE21-0853, MEC21-0514, PLB21-0900

County of Orange - OC Public Works
OC Development Services
APPROVED
This set of plans and specifications must be kept on the job at all times. It is unlawful to make any changes or alterations to these plans without written permission from OC Public Works, OC Development Services of Orange County. The stamping of these plan specifications SHALL NOT be held to permit or be an approval of the violation of any provisions of any County Ordinance or State law.
Hani Tohetsbaev
BUILDING OFFICIAL

SMS ARCHITECTS
100 Progress | Suite 250
Irvine, California 92618
949.757.3240 | www.sms-arch.com

CONSTANT
kpff
18400 Von Karman Ave., Suite 600
Irvine, CA 92612
O: 949.252.1022
F: 949.252.8082
www.kpff.com

DANA POINT HARBOR PARTNERS

GREGORY SILVER, PE, GE 2336
GMU GEOTECHNICAL, INC.
WE HAVE REVIEWED THE PLANS AND THEY ARE IN GENERAL CONFORMANCE WITH OUR GEOTECHNICAL RECOMMENDATIONS.
x_____

PROJECT NAME
DANA POINT HARBOR COMMERCIAL CORE
BUILDING 12
1290 HARBOR WAY
DANA POINT, CA 92629
CLIENT
BURNHAM | WARD PROPERTIES
BWP

JAMES ANDREW SHEHER No. 5913 Exp. 12/31/26 REGISTERED PROFESSIONAL ENGINEER STRUCTURAL STATE OF CALIFORNIA

No.	DATE	ISSUE
	02/10/2023	100% DESIGN DEVELOPMENT
	04/21/2023	COUNTY RESUBMITTAL
A	07/24/2023	CITY RESUBMITTAL

DRAWINGS AND WRITTEN MATERIAL APPEARING HEREIN CONSTITUTE ORIGINAL AND UNPUBLISHED WORK OF SMS ARCHITECTS AND MAY NOT BE DUPLICATED, USED OR DISCLOSED WITHOUT WRITTEN CONSENT OF THE ARCHITECT

PROJECT NO. 1900799
DATE Issue Date
DRAWING TITLE
MOMENT FRAME DETAILS

DRAWING NO.
S8.2.6

9/8/2023 10:42:44 AM

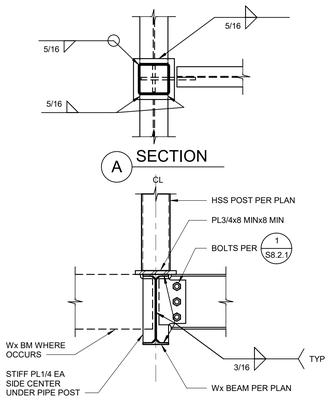

POST TO BEAM CONNECTION 1" = 1'-0" 8

Zoning: CanningK 11/13/2024

Building&Safety: OCPWAzarvandB 12/22/2025

Permits: BNR21-0246, ELE21-0853, MEC21-0514, PLB21-0900

County of Orange - OC Public Works
OC Development Services
APPROVED

This set of plans and specifications must be kept on the job at all times. It is unlawful to make any changes or alterations to these plans without written permission from OC Public Works, OC Development Services of Orange County. The stamping of these plan specifications SHALL NOT be held to permit or be an approval of the violation of any provisions of any County Ordinance or State law.

Hadi Tabatabaee
BUILDING OFFICIAL

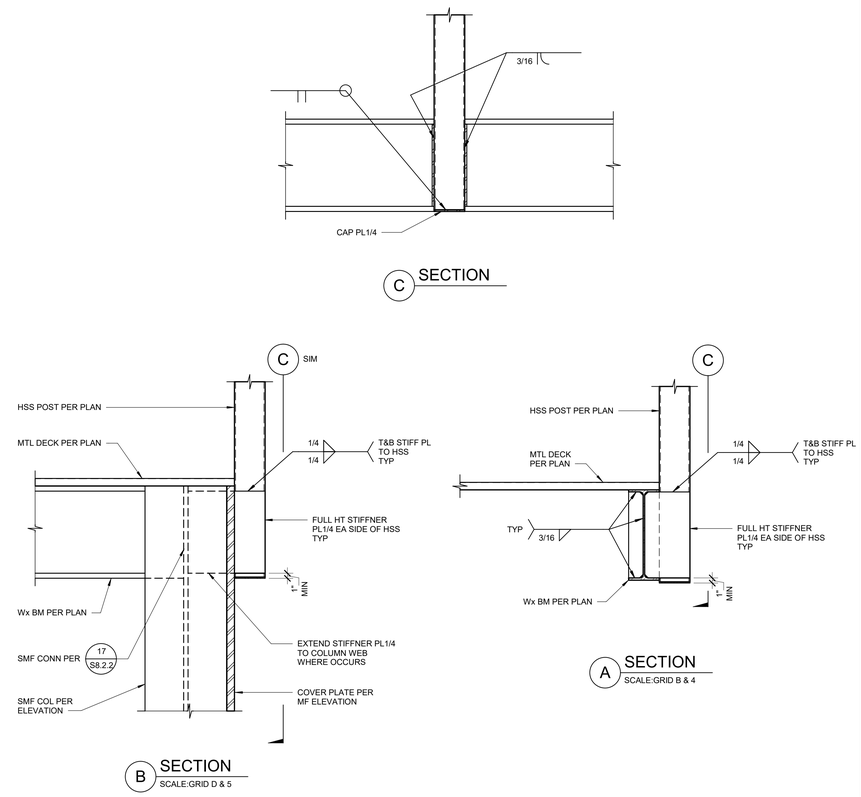

PARAPET POST CONNECTION 1" = 1'-0" 2

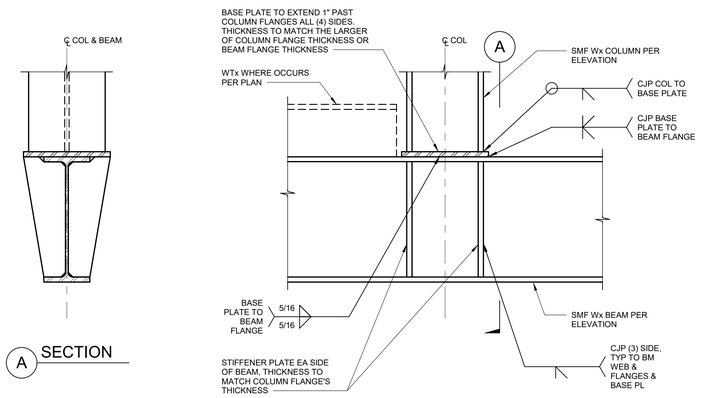

COLUMN TO BEAM CONNECTION 1" = 1'-0" 1

SMSARCHITECTS
100 Progress | Suite 250
Irvine, California 92618
949.757.3240 | www.sms-arch.com

CONSTANT
kpff
18400 Von Karman Ave., Suite 600
Irvine, CA 92612
O: 949.252.1022
F: 949.252.8082
www.kpff.com

DANA POINT HARBOR PARTNERS

PROJECT NAME
DANA POINT HARBOR COMMERCIAL CORE
BUILDING 12
1290 HARBOR WAY
DANA POINT, CA 92629

CLIENT
BURNHAM | WARD PROPERTIES

REGISTERED PROFESSIONAL ENGINEER
CHRISTOPHER ANDREW DOMINAS
No. 5913
Exp. 12/31/25
STRUCTURAL
STATE OF CALIFORNIA

No.	DATE	ISSUE
	02/10/2023	100% DESIGN DEVELOPMENT
A	07/24/2023	CITY RESUBMITTAL

DRAWINGS AND WRITTEN MATERIAL APPEARING HEREIN CONSTITUTE ORIGINAL AND UNPUBLISHED WORK OF SMS ARCHITECTS AND MAY NOT BE DUPLICATED, USED OR DISCLOSED WITHOUT WRITTEN CONSENT OF THE ARCHITECT

PROJECT NO. 1900799
DATE Issue Date
DRAWING TITLE
STEEL DETAILS

DRAWING NO.
S8.2.7

9/8/2023 10:42:48 AM

BIM 360://1008190079 - R21 Dana Point Harbor Revitalization/1900799_DPH_Building 12-Struct.rvt

NOTES:
1. LATERAL BRACING OF METAL STUDS REQUIRED WHEN GYP BOARD IS NOT PROVIDED ON BOTH SIDES OF METAL STUD.
2. BRIDGING/BRACING TO BE SPACED AT 4'-0"OC MAX VERTICALLY.
3. WHERE ARCHITECTURAL DRAWINGS DO NOT REQUIRE GYP BOARD TO EXTEND THE FULL WALL HEIGHT, LATERAL BRACING IS REQUIRED WHERE 'X' EXCEEDS 4'-0".
4. SEE DETAIL 13/- FOR ALTERNATE BRACING OPTIONS.

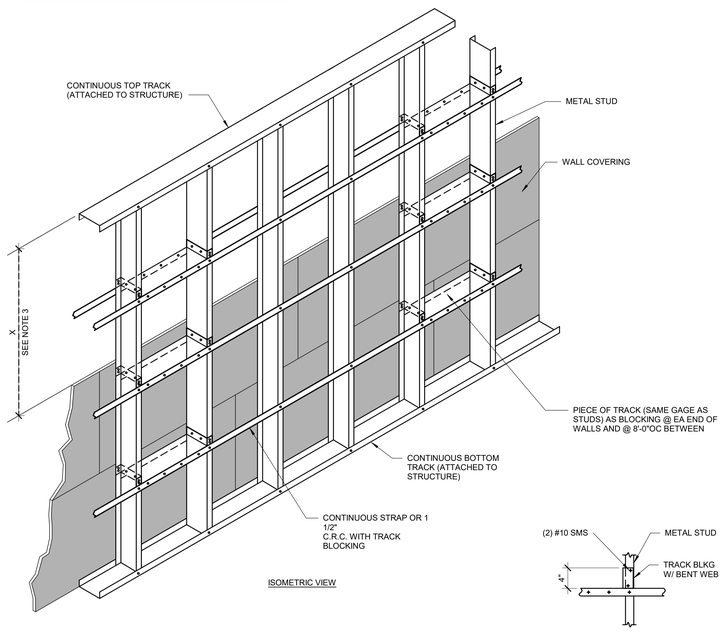

ISOMETRIC VIEW

SIDE VIEW

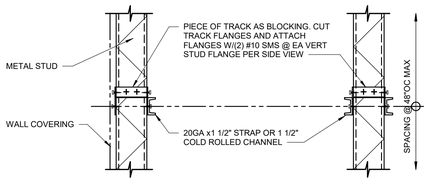

SECTION THROUGH STRAP BRACING

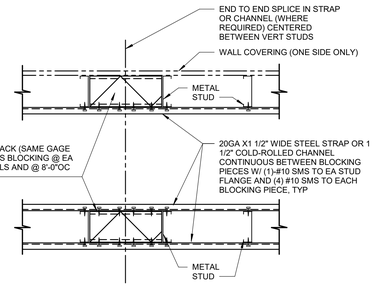

PLAN VIEW

EXTERIOR METAL STUD BRACING DETAIL | NTS | 14

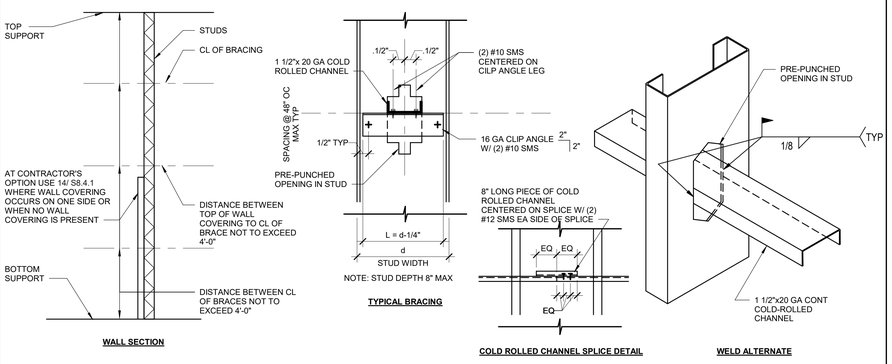

WALL SECTION

TYPICAL BRACING

COLD ROLLED CHANNEL SPLICE DETAIL

WELD ALTERNATE

EXTERIOR ALTERNATE WALL BRACING DETAIL | NTS | 13

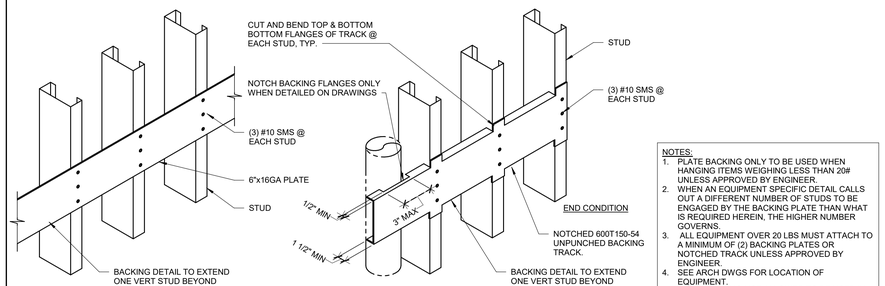

NOTES:
1. PLATE BACKING ONLY TO BE USED WHEN HANGING ITEMS WEIGHING LESS THAN 20# UNLESS APPROVED BY ENGINEER.
2. WHEN AN EQUIPMENT SPECIFIC DETAIL CALLS OUT A DIFFERENT NUMBER OF STUDS TO BE ENGAGED BY THE BACKING PLATE THAN WHAT IS REQUIRED HEREIN, THE HIGHER NUMBER GOVERNS.
3. ALL EQUIPMENT OVER 20 LBS MUST ATTACH TO A MINIMUM OF (2) BACKING PLATES OR NOTCHED TRACK UNLESS APPROVED BY ENGINEER.
4. SEE ARCH DWGS FOR LOCATION OF EQUIPMENT.
5. PLATE BACKING NOT ALLOWED TO BE USED IN CORRIDORS OR HANDRAIL LOACATIONS. USE NOTCHED TRACK.
6. PLATE BACKING DETAIL SHALL NOT BE USED UNLESS SPECIFICALLY INDICATED IN DETAILS.

EXTERIOR STEEL STUD BACKING DETAIL | NTS | 8

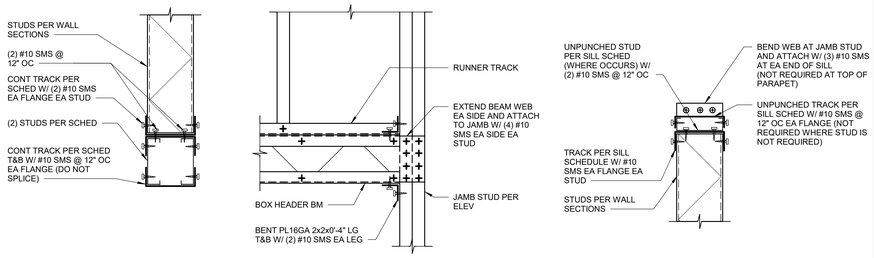

A HEADER CONNECTION TO JAMB

B SILL SECTION

EXTERIOR HEADER AND SILL | NTS | 7

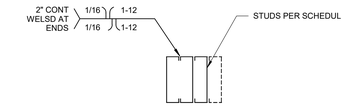

E TYPICAL JAMB STUD

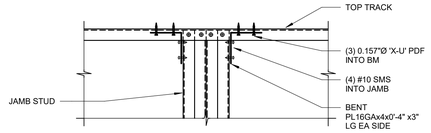

F JAMB TOP CONNECTION

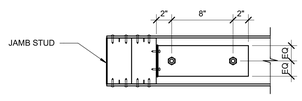

C ANCHORAGE AT OPENING

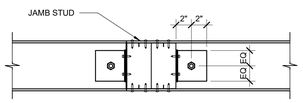

D ANCHORAGE AT INTERIOR

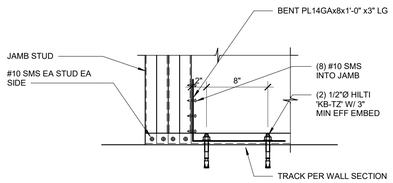

A ANCHORAGE AT OPENING

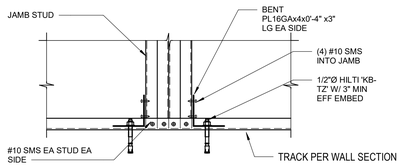

B ANCHORAGE AT INTERIOR

EXTERIOR JAMB DETAILS | NTS | 5

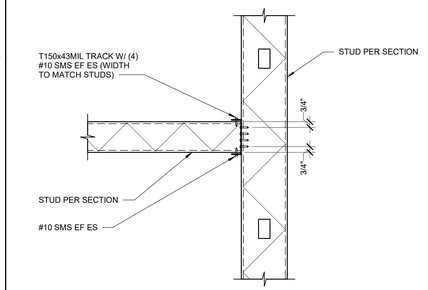

TRACK TO WALL CONNECTION | 1 1/2" = 1'-0" | 3

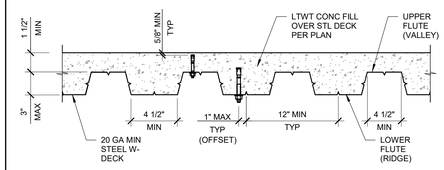

EXPANSION ANCH TO CONC MTL DECK | NTS | 2

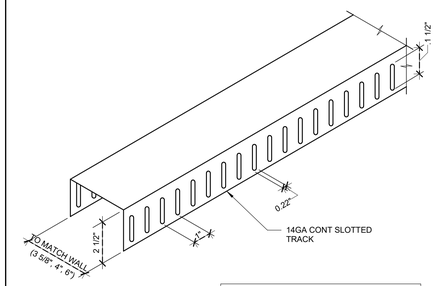

NOTES:
1. SLOTTED DEFLECTION TO BE CLARK-DIETRICH 'MAX TRAK' SYSTEM (IAPMO ER-0145), OR APPROVED EQUAL.

EXTERIOR SLOTTED DEFLECTION TRACK | NTS | 1

Zoning: CanningK 11/13/2024

Building&Safety: OCPWAzarvandB 12/22/2025

Permits: BNR21-0246, ELE21-0853, MEC21-0514, PLB21-0900

County of Orange - OC Public Works
OC Development Services
APPROVED
This set of plans and specifications must be kept on the job at all times. It is unlawful to make any changes or alterations to these plans without written permission from OC Public Works, OC Development Services of Orange County. The stamping of these plan specifications SHALL NOT be held to permit or be an approval of the violation of any provisions of any County Ordinance or State law.
Hind Tahtabawi
BUILDING OFFICIAL

SMS ARCHITECTS
100 Progress | Suite 250
Irvine, California 92618
949.757.3240 | www.sms-arch.com

CONSTANT
kpff
18400 Von Karman Ave., Suite 600
Irvine, CA 92612
O: 949.252.1022
F: 949.252.8082
www.kpff.com

DANA POINT HARBOR PARTNERS

PROJECT NAME
DANA POINT HARBOR COMMERCIAL CORE
BUILDING 12
1290 HARBOR WAY
DANA POINT, CA 92629

CLIENT
BWP PROPERTIES
BURNHAM | WARD

REGISTERED PROFESSIONAL ENGINEER CHRISTOPHER ANDREW BOWLES No. 5913 Exp. 12/31/25 STRUCTURAL STATE OF CALIFORNIA

No.	DATE	ISSUE
	02/10/2023	100% DESIGN DEVELOPMENT
	04/21/2023	COUNTY RESUBMITTAL
A	07/24/2023	CITY RESUBMITTAL

DRAWINGS AND WRITTEN MATERIAL APPEARING HEREIN CONSTITUTE ORIGINAL AND UNPUBLISHED WORK OF SMS ARCHITECTS AND MAY NOT BE DUPLICATED, USED OR DISCLOSED WITHOUT WRITTEN CONSENT OF THE ARCHITECT

PROJECT NO. 1900799

DATE Issue Date

DRAWING TITLE
TYPICAL EXTERIOR METAL STUD DETAILS

DRAWING NO.
S8.4.1

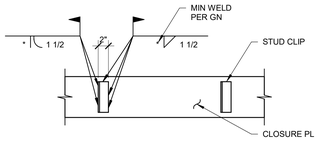

A ELEVATION OF CLIP ANGLE

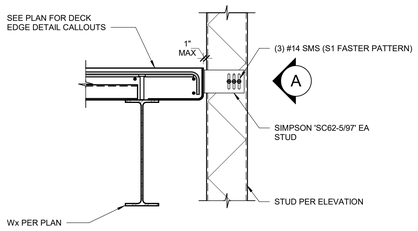

VERTICAL SLIP CLIP TO DECK EDGE

1" = 1'-0" | 16

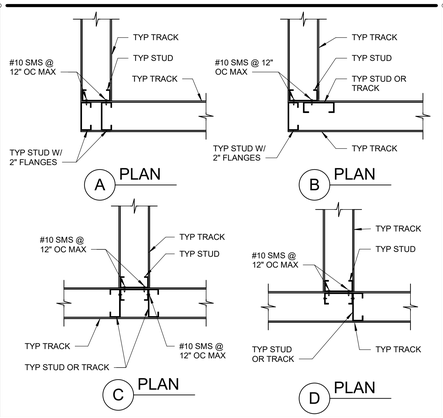

TYPICAL STUD INTERSECTION

1" = 1'-0" | 12

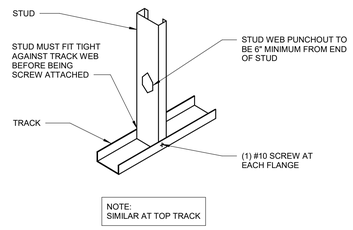

TYPICAL STUD TO TRACK CONNECTION

1" = 1'-0" | 8

Zoning: CanningK 11/13/2024

Building&Safety: OCPWAzarvandB 12/22/2025

Permits: BNR21-0246, ELE21-0853, MEC21-0514, PLB21-0900

County of Orange - OC Public Works
OC Development Services
APPROVED
This set of plans and specifications must be kept on the job at all times. It is unlawful to make any changes or alterations to these plans without written permission from OC Public Works, OC Development Services of Orange County. The stamping of these plan specifications SHALL NOT be held to permit or be an approval of the violation of any provisions of any County Ordinance or State law.
Hani Tohetsbaer
BUILDING OFFICIAL

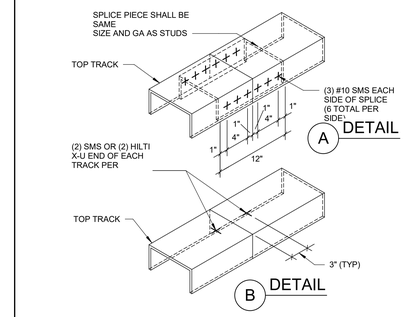

TYPICAL TOP TRACK SPLICE

1" = 1'-0" | 15

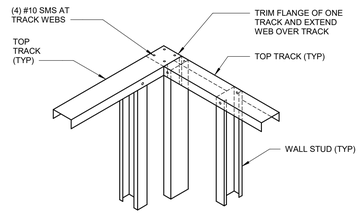

TYPICAL TOP TRACK AT CORNER

1" = 1'-0" | 11

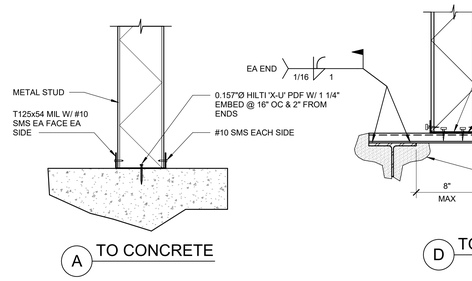

WALL SILL ATTACHMENT DETAIL

1 1/2" = 1'-0" | 1

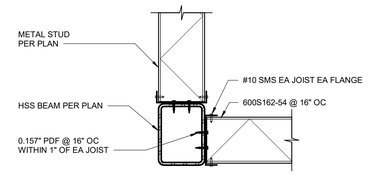

METAL STUD TO HSS BM CONNECTION

1 1/2" = 1'-0" | 18

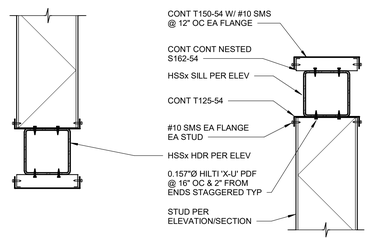

WALL AT HSS

1 1/2" = 1'-0" | 14

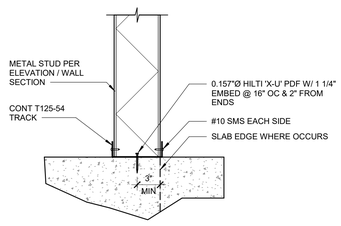

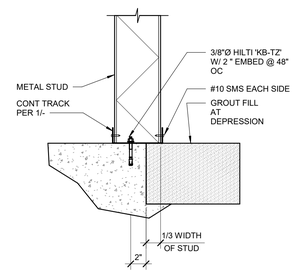

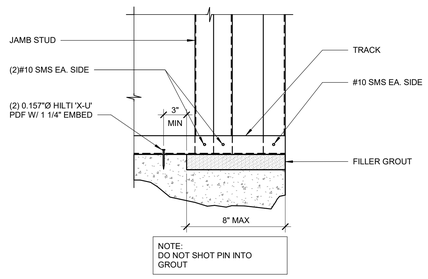

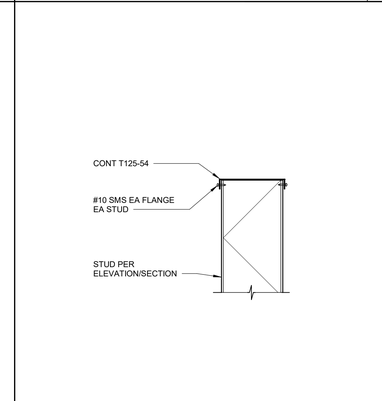

METAL STUD JOIST INTERSECTION

1 1/2" = 1'-0" | 17

END TRACK DETAIL

1 1/2" = 1'-0" | 13

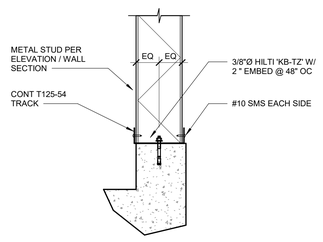

WALL SILL ATTACHMENT DETAIL

1 1/2" = 1'-0" | 9

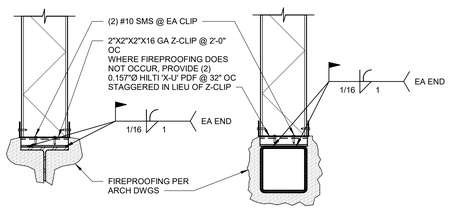

SMSARCHITECTS
100 Progress | Suite 250
Irvine, California 92618
949.757.3240 | www.sms-arch.com

CONSTANT
kpff
18400 Von Karman Ave., Suite 600
Irvine, CA 92612
O: 949.252.1022
F: 949.252.8082
www.kpff.com

DANA POINT HARBOR PARTNERS

PROJECT NAME
DANA POINT HARBOR COMMERCIAL CORE
BUILDING 12
1290 HARBOR WAY
DANA POINT, CA 92629

CLIENT
BWP BURNHAM|WARD PROPERTIES

JAMES ANDREW BOYER
No. 5913
Exp. 12/31/25
STRUCTURAL
STATE OF CALIFORNIA

No.	DATE	ISSUE
	02/10/2023	100% DESIGN DEVELOPMENT
	04/21/2023	COUNTY RESUBMITTAL
A	07/24/2023	CITY RESUBMITTAL

DRAWINGS AND WRITTEN MATERIAL APPEARING HEREIN CONSTITUTE ORIGINAL AND UNPUBLISHED WORK OF SMS ARCHITECTS AND MAY NOT BE DUPLICATED, USED OR DISCLOSED WITHOUT WRITTEN CONSENT OF THE ARCHITECT

PROJECT NO. 1900799

DATE Issue Date

DRAWING TITLE
EXTERIOR METAL STUD DETAILS

DRAWING NO.
S8.4.2

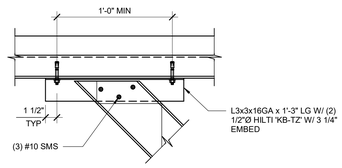

A PARALLEL TO DECK

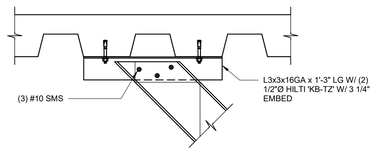

B PERPENDICULAR TO DECK

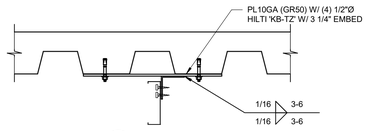

D SECTION

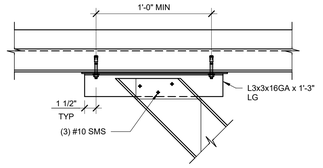

C ALTERNATE CONN

BRACE CONN TO CONC OVER MTL DECK | 1 1/2" = 1'-0" | **18**

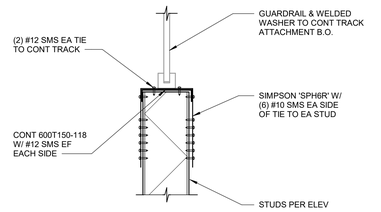

GUARDRAIL TO TOP OF PARAPET | 1 1/2" = 1'-0" | **16**

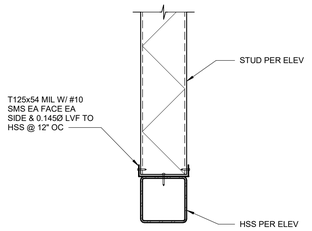

CONNECTION AT HSS BEAM | 1 1/2" = 1'-0" | **12**

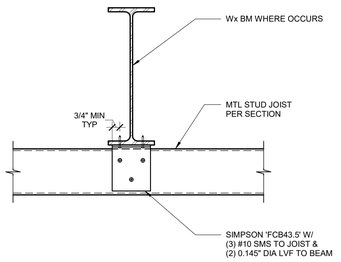

CLIP CONNECTION AT STEEL BEAM | 1 1/2" = 1'-0" | **8**

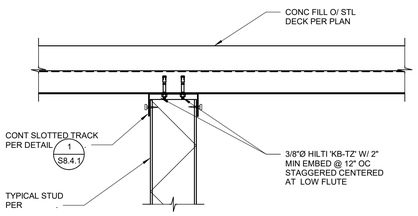

A EXT WALL PERP TO DECK

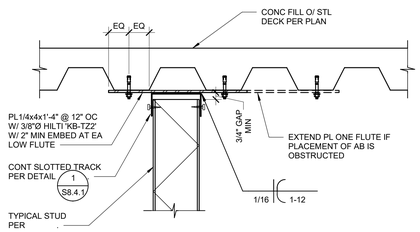

B EXT WALL PARALLEL TO DECK

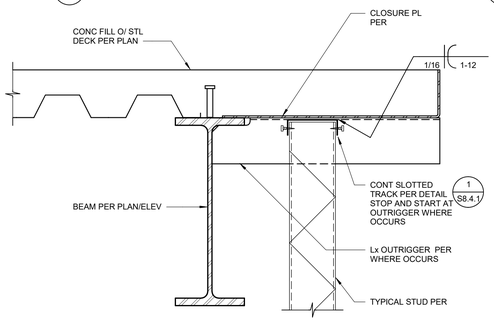

C EXT WALL AT CLOSURE PL

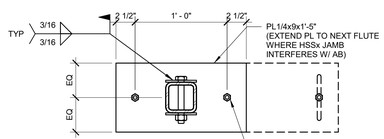

E SECTION

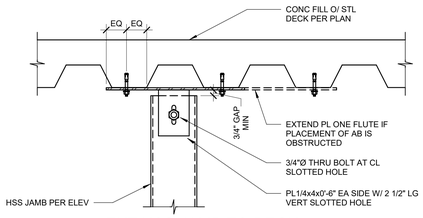

D EXT HSS JAMB TO DECK

TYPICAL TOP OF WALL CONNECTION | 1 1/2" = 1'-0" | **10**

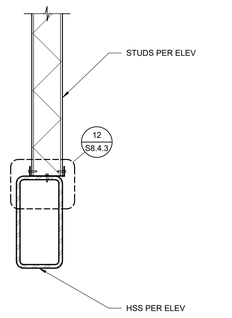

HSS HEADER AT CANOPY | 1 1/2" = 1'-0" | **17**

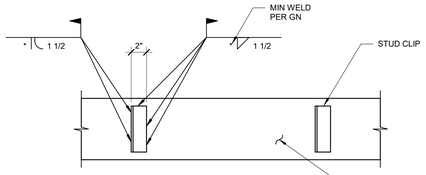

B ELEVATION OF CLIP ANGLE

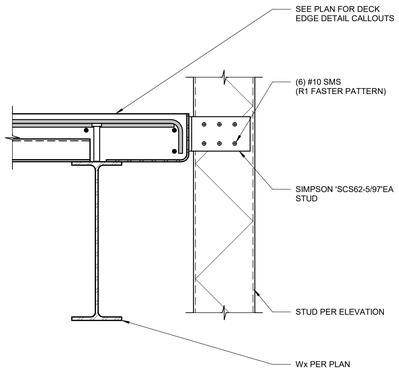

RIGID CLIP TO DECK EDGE | 1 1/2" = 1'-0" | **9**

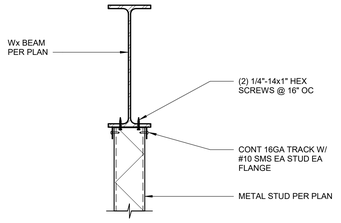

FIXED CONNECTION UNDER Wx BEAM | 1 1/2" = 1'-0" | **7**

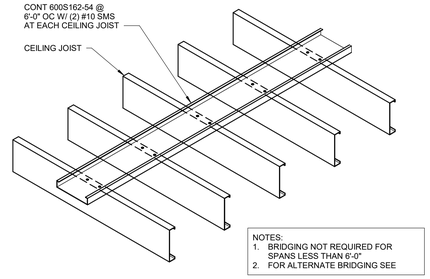

NOTES:
1. BRIDGING NOT REQUIRED FOR SPANS LESS THAN 6'-0"
2. FOR ALTERNATE BRIDGING SEE

TYP CEILING JOIST BRIDGING | 1" = 1'-0" | **3**

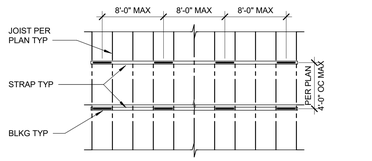

D TYPICAL PLAN VIEW
SCALE:NTS

NOTE:
BRIDGING NOT REQUIRED WHERE JOIST ARE SHEATHED TOP AND BOTTOM.

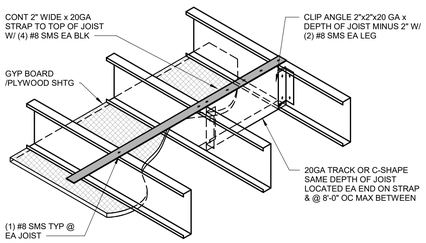

B BRIDGING AT TOP OF JOIST

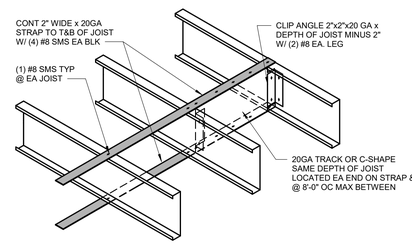

C BRIDGING AT T&B OF JOIST

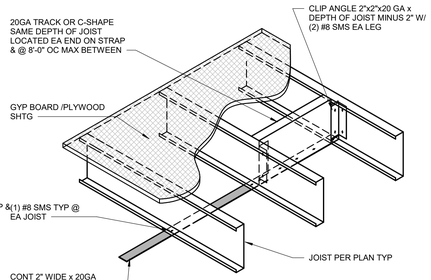

A BRIDGING AT BOTTOM OF JOIST

JOIST BRIDGING DETAIL | 1" = 1'-0" | **1**

Zoning: CanningK 11/13/2024

Building&Safety: OCPWAzarvandB 12/22/2025

Permits: BNR21-0246, ELE21-0853, MEC21-0514, PLB21-0900

County of Orange - OC Public Works
OC Development Services
APPROVED

This set of plans and specifications must be kept on the job at all times. It is unlawful to make any changes or alterations to these plans without written permission from OC Public Works, OC Development Services of Orange County. The stamping of these plan specifications SHALL NOT be held to permit or be an approval of the violation of any provisions of any County Ordinance or State law.

Hani Tahetsiam
BUILDING OFFICIAL

SMSARCHITECTS
100 Progress | Suite 250
Irvine, California 92618
949.757.3240 | www.sms-arch.com

CONSTANT
kpff
18400 Von Karman Ave., Suite 600
Irvine, CA 92612
O: 949.252.1022
F: 949.252.8082
www.kpff.com

DANA POINT HARBOR PARTNERS

PROJECT NAME
DANA POINT HARBOR COMMERCIAL CORE
BUILDING 12
1290 HARBOR WAY
DANA POINT, CA 92629

CLIENT
BWP BURNHAM|WARD PROPERTIES



No.	DATE	ISSUE
	02/10/2023	100% DESIGN DEVELOPMENT
	04/21/2023	COUNTY RESUBMITTAL
A	07/24/2023	CITY RESUBMITTAL

DRAWINGS AND WRITTEN MATERIAL APPEARING HEREIN CONSTITUTE ORIGINAL AND UNPUBLISHED WORK OF SMS ARCHITECTS AND MAY NOT BE DUPLICATED, USED OR DISCLOSED WITHOUT WRITTEN CONSENT OF THE ARCHITECT

PROJECT NO. 1900799
DATE Issue Date

DRAWING TITLE
METAL STUD DETAILS

DRAWING NO.
S8.4.3

EXTERIOR SOFFIT SCHEDULE		
STUD	MAXIMUM SPAN	HANGER SUPPORT*
400S162-54 @ 16" OC	9'-0"	400S125-33
400S350-68 @ 16" OC	14'-0"	400S125-33

* WHERE UTILIZED

NOTE: SOFFIT STUDS SHALL SPAN PARALLEL TO DECK

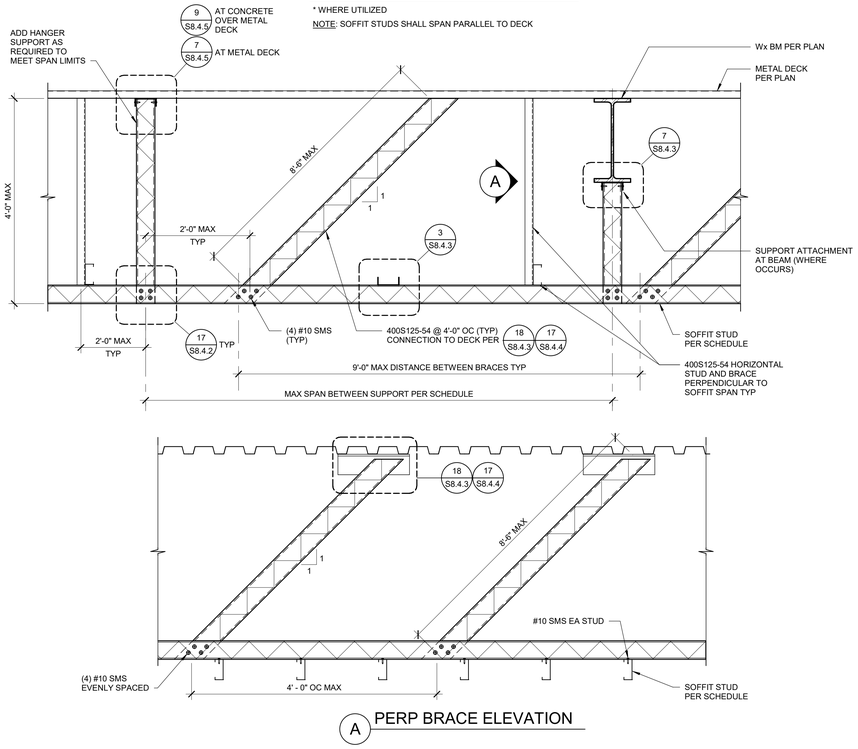

A PERP BRACE ELEVATION

TYPICAL EXTERIOR SOFFIT 1" = 1'-0" **15**

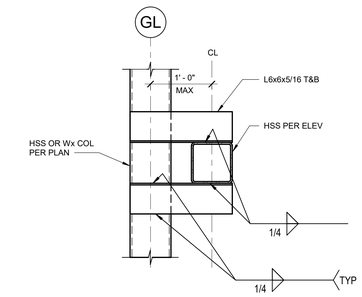

HSS HEADER TO COLUMN 1" = 1'-0" **12**

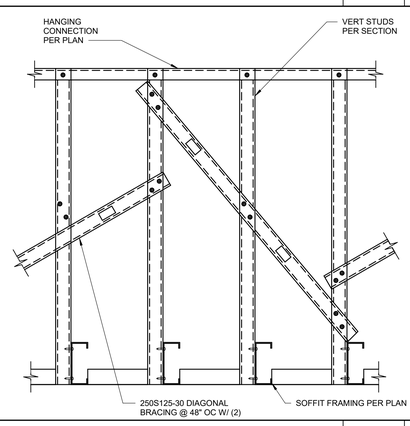

SOFFIT IN PLANE BRACING 1 1/2" = 1'-0" **11**

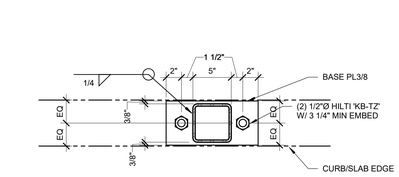

HSSx POST BASE PLATE 1 1/2" = 1'-0" **8**

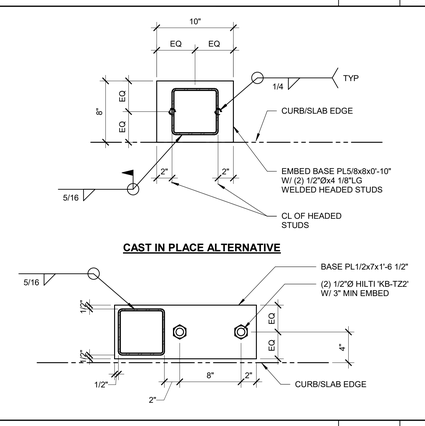

CLADDING HSSx POST BASE PLATE 1 1/2" = 1'-0" **7**

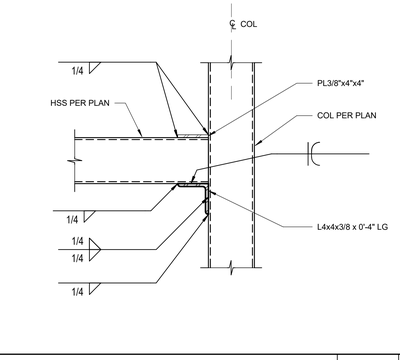

HSSx HEADER TO HSSx JAMB 1 1/2" = 1'-0" **3**

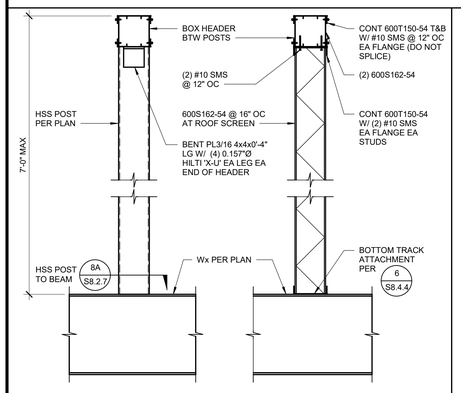

ROOF SCREEN ATTACHMENT 1" = 1'-0" **18**

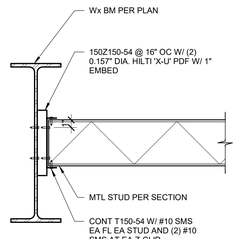

NOTE:

WHERE FIREPROOFING DOES NOT OCCUR, Z-CLIP MAY BE OMITTED WITH CONT TRACK ATTACHED DIRECTLY TO Wx BM WEB.

BALCONY EDGE SOFFIT FRAMING 1 1/2" = 1'-0" **14**

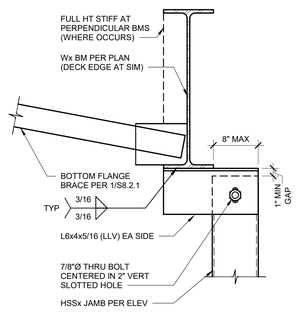

HSS JAMB TOP CONNECTION 1 1/2" = 1'-0" **9**

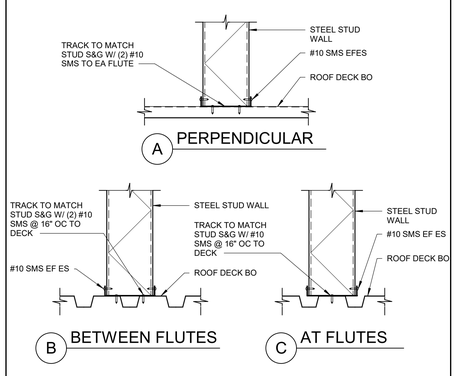

BASE CONNECTION TO METAL DECK 1 1/2" = 1'-0" **6**

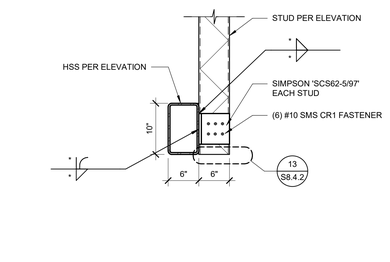

EXTERIOR METAL STUD TO HSS BM 1" = 1'-0" **2**

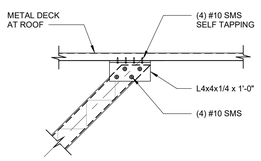

BRACE PARALLEL TO DECK

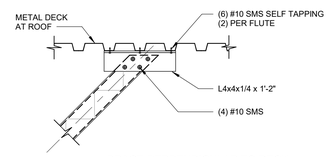

BRACE PERPENDICULAR TO DECK

TYPICAL BRACE CONN TO MTL DECK 1" = 1'-0" **17**

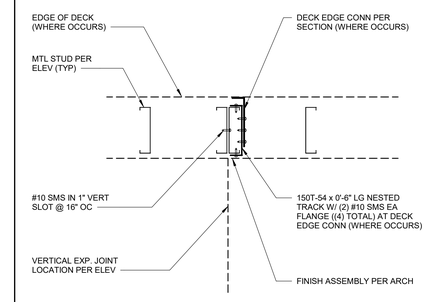

VERTICAL EXPANSION JOINT 1 1/2" = 1'-0" **13**

AT Wx BM FLANGE CONFLICT

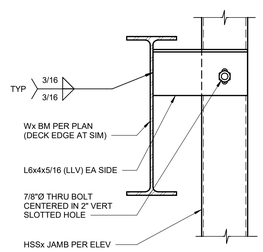

HSS JAMB TOP CONNECTION 1 1/2" = 1'-0" **9**

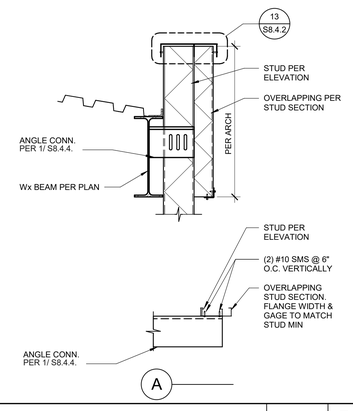

STUD TO Wx BM CONNECTION 1" = 1'-0" **5**

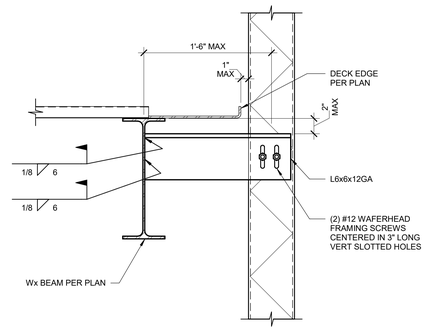

VERTICAL SLIP ANGLE TO Wx BEAM 1 1/2" = 1'-0" **1**

Zoning: CanningK 11/13/2024

Building&Safety: OCPWAzarvandB 12/22/2025

Permits: BNR21-0246, ELE21-0853, MEC21-0514, PLB21-0900

County of Orange - OC Public Works
OC Development Services
APPROVED

This set of plans and specifications must be kept on the job at all times. It is unlawful to make any changes or alterations to these plans without written permission from OC Public Works, OC Development Services of Orange County. The stamping of these plan specifications SHALL NOT be held to permit or be an approval of the violation of any provisions of any County Ordinance or State law.

Hani Tahetsbani
BUILDING OFFICIAL

SMSARCHITECTS
100 Progress | Suite 250
Irvine, California 92618
949.757.3240 | www.sms-arch.com

CONSTANT
kpff
18400 Von Karman Ave., Suite 600
Irvine, CA 92612
O: 949.252.1022
F: 949.252.8082
www.kpff.com

DANA POINT HARBOR PARTNERS

PROJECT NAME
DANA POINT HARBOR COMMERCIAL CORE
BUILDING 12
1290 HARBOR WAY
DANA POINT, CA 92629

CLIENT
BWP BURNHAM|WARD PROPERTIES

REGISTERED PROFESSIONAL ENGINEER CHRISTOPHER ANDREW DAVIS No. 5913 Exp. 12/31/25 STRUCTURAL STATE OF CALIFORNIA

No.	DATE	ISSUE
	02/10/2023	100% DESIGN DEVELOPMENT
	04/21/2023	COUNTY RESUBMITTAL
A	07/24/2023	CITY RESUBMITTAL

DRAWINGS AND WRITTEN MATERIAL APPEARING HEREIN CONSTITUTE ORIGINAL AND UNPUBLISHED WORK OF SMS ARCHITECTS AND MAY NOT BE DUPLICATED, USED OR DISCLOSED WITHOUT WRITTEN CONSENT OF THE ARCHITECT

PROJECT NO 1900799

DATE Issue Date

DRAWING TITLE
METAL STUD DETAILS

DRAWING NO.
S8.4.4

BIM 360://1008/1900799 - R21 Dana Point Harbor Revitalization/1900799_DPH_Building 12-Struct.rvt

9/8/2023 10:43:17 AM

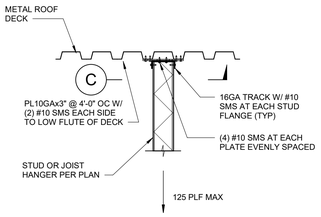

A PARALLEL TO ROOF DECK

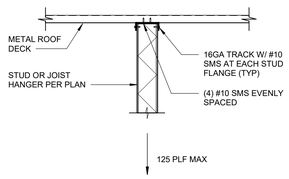

B PERPENDICULAR TO ROOF DECK

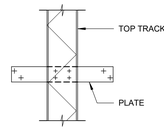

C SECTION

HANGER CONNECTION TO METAL DECK 1" = 1'-0" **7**

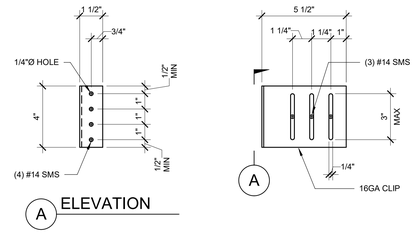

A ELEVATION

SLOTTED CONNECTION CLIP 3" = 1'-0" **3**

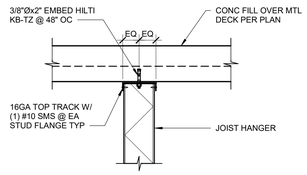

A PERPENDICULAR TO DECK

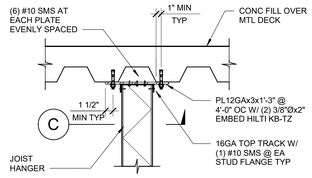

B PARALLEL TO DECK

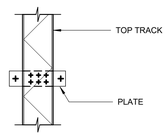

C SECTION

TYPICAL CEILING JOIST HANGER 1" = 1'-0" **9**

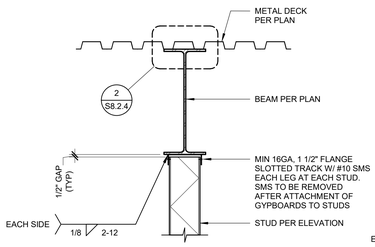

A CENTERED

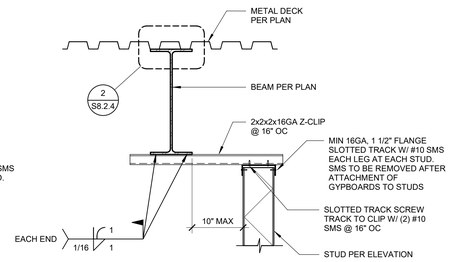

C LARGE OFFSET

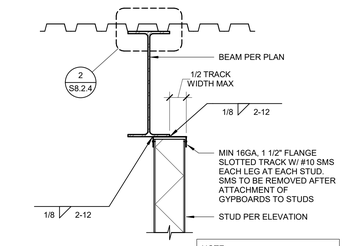

B SMALL OFFSET

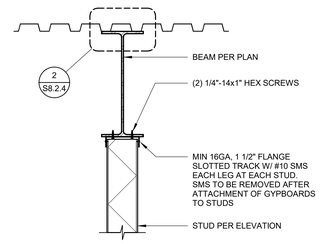

D STUD TO BOTTOM OF BEAM

CONNECTION TO UNDERSIDE OF Wx 1" = 1'-0" **1**

Zoning: CanningK 11/13/2024

Building&Safety: OCPWAzarvandB 12/22/2025

Permits: BNR21-0246, ELE21-0853, MEC21-0514, PLB21-0900

County of Orange - OC Public Works
OC Development Services
APPROVED

This set of plans and specifications must be kept on the job at all times. It is unlawful to make any changes or alterations to these plans without written permission from OC Public Works/ OC Development Services of Orange County. The stamping of these plan specifications SHALL NOT be held to permit or be an approval of the violation of any provisions of any County Ordinance or State law.

Hani Tahetsbani
BUILDING OFFICIAL

SMSARCHITECTS
100 Progress | Suite 250
Irvine, California 92618
949.757.3240 | www.sms-arch.com

CONSTANT
kpff
18400 Von Karman Ave., Suite 600
Irvine, CA 92612
O: 949.252.1022
F: 949.252.8082
www.kpff.com

DANA POINT HARBOR PARTNERS

PROJECT NAME
DANA POINT HARBOR COMMERCIAL CORE
BUILDING 12
1290 HARBOR WAY
DANA POINT, CA 92629

CLIENT
BURNHAM | WARD PROPERTIES
BWP

STRUCTURAL OPTION
CHRISTOPHER ANDREW BUSH
No. 5913
Exp. 12/31/24
STRUCTURAL
STATE OF CALIFORNIA

No.	DATE	ISSUE
	02/10/2023	100% DESIGN DEVELOPMENT
	04/21/2023	COUNTY RESUBMITTAL
A	07/24/2023	CITY RESUBMITTAL

DRAWINGS AND WRITTEN MATERIAL APPEARING HEREIN CONSTITUTE ORIGINAL AND UNPUBLISHED WORK OF SMS ARCHITECTS AND MAY NOT BE DUPLICATED, USED OR DISCLOSED WITHOUT WRITTEN CONSENT OF THE ARCHITECT

PROJECT NO. 1900799

DATE Issue Date

DRAWING TITLE
METAL STUD DETAILS

DRAWING NO.
S8.4.5

BIM 360://1008/1900799 - R21 Dana Point Harbor Revitalization/1900799_DPH_Building 12-Struct.rvt

9/8/2023 10:43:21 AM

Zoning: CanningK 11/13/2024

Building&Safety: OCPWAzarvandB 12/22/2025

Permits: BNR21-0246, ELE21-0853, MEC21-0514, PLB21-0900

County of Orange - OC Public Works
OC Development Services
APPROVED

This set of plans and specifications must be kept on the job at all times. It is unlawful to make any changes or alterations to these plans without written permission from OC Public Works, OC Development Services of Orange County. The stamping of these plan specifications SHALL NOT be held to permit or be an approval of the violation of any provisions of any County Ordinance or State law.

Hadi Tabatabaee
BUILDING OFFICIAL

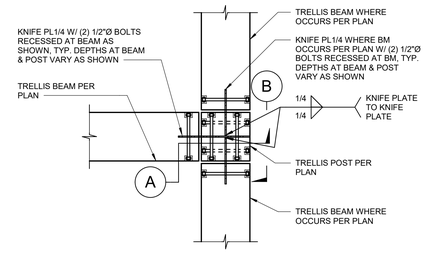

PLAN

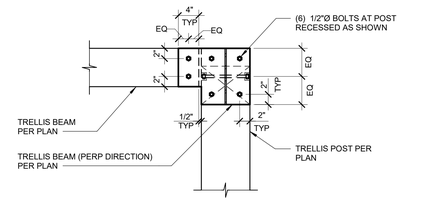

A SECTION

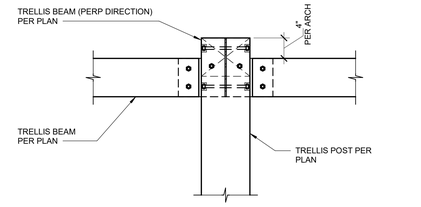

B SECTION

NOTE:
SEE SECTION 'A' FOR INFO NOT SPECIFIED

TRELLIS BEAM-TO-POST CONNECTION 1" = 1'-0" 1

SMSARCHITECTS
100 Progress | Suite 250
Irvine, California 92618
949.757.3240 | www.sms-arch.com

CONSTANT
kpff
18400 Von Karman Ave., Suite 600
Irvine, CA 92612
O: 949.252.1022
F: 949.252.8082
www.kpff.com

DANA POINT HARBOR PARTNERS

PROJECT NAME
DANA POINT HARBOR COMMERCIAL CORE
BUILDING 12
1290 HARBOR WAY
DANA POINT, CA 92629

CLIENT
BWP BURNHAM|WARD PROPERTIES

REGISTERED PROFESSIONAL ENGINEER
CHRISTOPHER ANDREW DOMINICK
No. 5913
Exp. 12/31/25
STRUCTURAL
STATE OF CALIFORNIA

No.	DATE	ISSUE
	02/10/2023	100% DESIGN DEVELOPMENT
	04/21/2023	COUNTY RESUBMITTAL
A	07/24/2023	CITY RESUBMITTAL

DRAWINGS AND WRITTEN MATERIAL APPEARING HEREIN CONSTITUTE ORIGINAL AND UNPUBLISHED WORK OF SMS ARCHITECTS AND MAY NOT BE DUPLICATED, USED OR DISCLOSED WITHOUT WRITTEN CONSENT OF THE ARCHITECT

PROJECT NO. 1900799
DATE Issue Date
DRAWING TITLE
WOOD DETAILS

DRAWING NO.
S8.6.1

9/8/2023 10:43:24 AM

BIM 360://10081900799 - R21 Dana Point Harbor Revitalization/1900799_DPH_Building 12-Struct.rvt

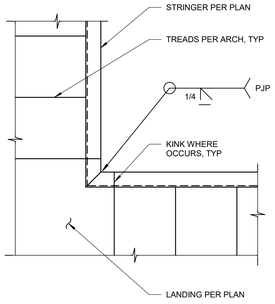

STRINGER TO CORNER CONDITION | 1" = 1'-0" | 13

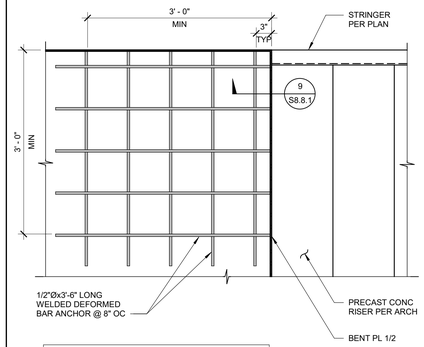

NOTE:
FOR INFORMATION NOT SHOWN SEE DETAIL

STRINGER TO DECK CONN - CORNER | 1" = 1'-0" | 10

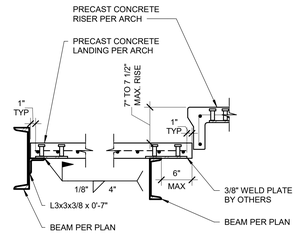

NOTE:
FOR INFORMATION NOT SHOWN SEE DETAIL 4 S8.8.1

STAIR STRINGER AT LANDING CONN | 1" = 1'-0" | 6

Zoning: CanningK 11/13/2024

Building&Safety: OCPWAzarvandB 12/22/2025

Permits: BNR21-0246, ELE21-0853, MEC21-0514, PLB21-0900

County of Orange - OC Public Works
OC Development Services
APPROVED

This set of plans and specifications must be kept on the job at all times. It is unlawful to make any changes or alterations to these plans without written permission from OC Public Works, OC Development Services of Orange County. The stamping of these plan specifications SHALL NOT be held to permit or be an approval of the violation of any provisions of any County Ordinance or State law.

Hani Tahetsiam
BUILDING OFFICIAL

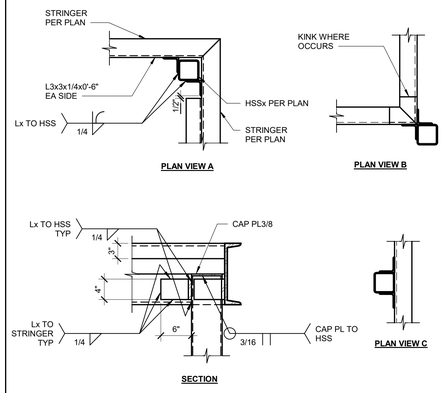

INTERMEDIATE STAIR LANDING SUPPORT | 1" = 1'-0" | 12

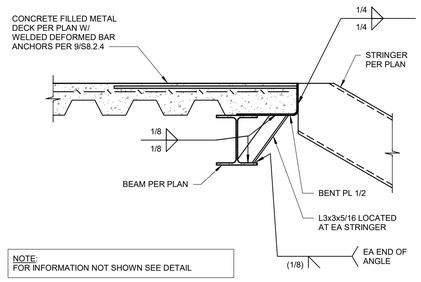

NOTE:
FOR INFORMATION NOT SHOWN SEE DETAIL

STRINGER TO DECK CONN - TYP | 1" = 1'-0" | 9

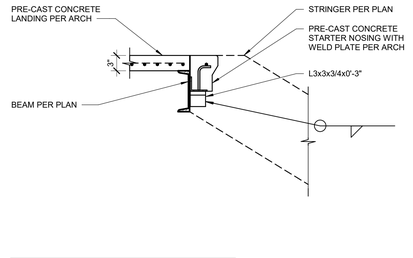

NOTE:
FOR INFORMATION NOT SHOWN SEE DETAIL 4 S8.8.1

STAIR STRINGER AT LANDING CONN | 1" = 1'-0" | 5

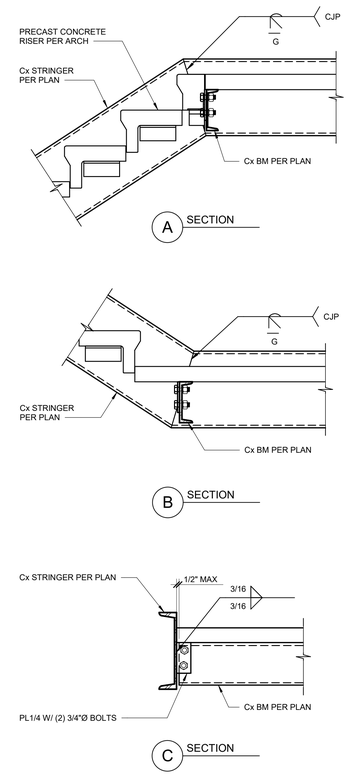

NOTE:
FOR INFORMATION NOT SHOWN SEE DETAIL 4 S8.8.1

STRINGER AT LANDING | 1" = 1'-0" | 2

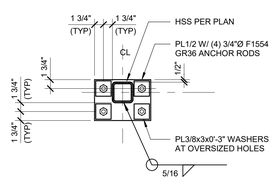

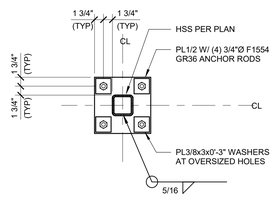

LANDING DETAIL | 1" = 1'-0" | 8

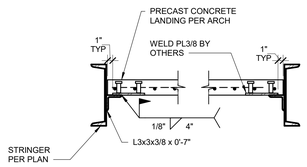

NOTE:
FOR INFORMATION NOT SHOWN SEE DETAIL 4 S8.8.1

STAIR STRINGER CONNECTION | 1" = 1'-0" | 4

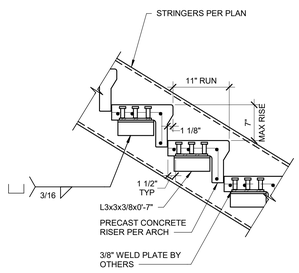

STAIR STRINGER TO FTG CONNECTION | 1" = 1'-0" | 3

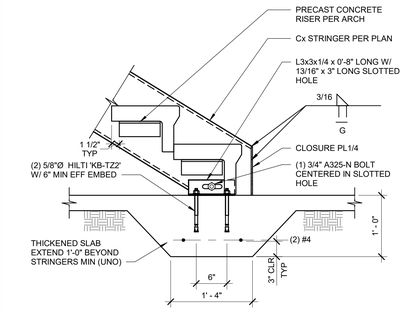

NOTE:
FOR INFORMATION NOT SHOWN SEE DETAIL 4 S8.8.1

STAIR STRINGER TO SOG CONNECTION | 1" = 1'-0" | 1

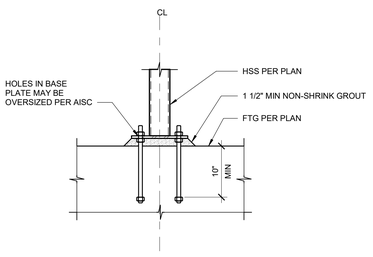

LANDING SUPPORT POST BASE | 1" = 1'-0" | 11

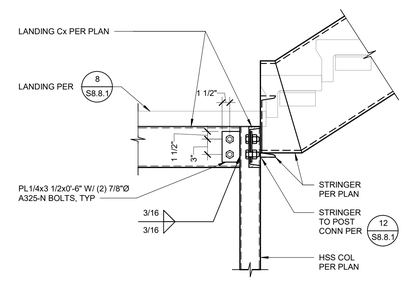

LANDING Cx TO HSS COL CONN | 1" = 1'-0" | 7

CONSULTANT

kpff

18400 Von Karman Ave., Suite 600
Irvine, CA 92612
O: 949.252.1022
F: 949.252.8082
www.kpff.com

SMSARCHITECTS
100 Progress | Suite 250
Irvine, California 92618
949.757.3240 | www.sms-arch.com

DANA POINT HARBOR PARTNERS

GREGORY SILVER, PE, GE 2336
GMU GEOTECHNICAL, INC.
WE HAVE REVIEWED THE PLANS AND THEY ARE IN GENERAL CONFORMANCE WITH OUR GEOTECHNICAL RECOMMENDATIONS.
x_____

PROJECT NAME
DANA POINT HARBOR COMMERCIAL CORE
BUILDING 12
1290 HARBOR WAY
DANA POINT, CA 92629

CLIENT
BURNHAM|WARD PROPERTIES
BWP

REGISTERED PROFESSIONAL ENGINEER CHRISTOPHER ANDREW SHIRLEY No. 5913 Exp. 12/31/24 STRUCTURAL STATE OF CALIFORNIA

No.	DATE	ISSUE
	02/10/2023	100% DESIGN DEVELOPMENT
	04/21/2023	COUNTY RESUBMITTAL
A	07/24/2023	CITY RESUBMITTAL

DRAWINGS AND WRITTEN MATERIAL APPEARING HEREIN CONSTITUTE ORIGINAL AND UNPUBLISHED WORK OF SMS ARCHITECTS AND MAY NOT BE DUPLICATED, USED OR DISCLOSED WITHOUT WRITTEN CONSENT OF THE ARCHITECT

PROJECT NO. 1900799
DATE Issue Date

DRAWING TITLE
STAIR DETAILS

DRAWING NO.
S8.8.1

BIM 360://1900/1900799_R21 Dana Point Harbor Revitalization/1900799_DPH_Building 12-Struct.rvt

9/8/2023 10:43:30 AM

1. THE GEOTECHNICAL SPECIFICATIONS FOUND ON THIS SHEET ARE BASED ON OUR "GEOTECHNICAL INVESTIGATION REPORT, VOLUMES 1, 2, AND 3, DANA POINT HARBOR REVITALIZATION: BUILDINGS 1 THROUGH 12, COMMERCIAL COMPONENT, CITY OF DATA POINT, CALIFORNIA" DATED MAY 27, 2021, AND AGI'S "DANA POINT HARBOR, COMMERCIAL COMPONENT, DEEP SOIL MIXING, DANA POINT, CALIFORNIA" PLAN SET DATED AUGUST 23, 2021.

2. TAIT'S FINAL DESIGN PLANS "BUILDINGS 6-12 AND SURFACE PARKING LOT, PRECISE GRADING PLANS", SHOULD BE REFERENCED FOR ADDITIONAL INFORMATION ON THE REMEDIAL GRADING AND THE LOAD TRANSFER PLATFORM.

3. FOOTINGS SHALL BEAR ON THE DEEP SOIL MIXED (DSM) COLUMNS EXTENDED TO BEDROCK OR ON A LIFT OF THE LTP NO MORE THAN 1-FOOT THICK UNLESS AUTHORIZED BY THE GEOTECHNICAL ENGINEER (GMU) OVER THE DSM COLUMNS.

4. SLABS ON GRADE SHALL BE UNDERLAIN BY A 15-MIL STEGOWRAP OR EQUIVALENT MOISTURE RETARDER/BARRIER, INSTALLED IN STRICT COMPLIANCE WITH THE MANUFACTURER'S RECOMMENDATIONS.

A. INSTALLED PER THE MANUFACTURE'S SPECIFICATIONS AS WELL AS WITH ALL APPLICABLE RECOGNIZED INSTALLATION PROCEDURES SUCH AS ASTM E1643-98.

B. JOINTS BETWEEN THE SHEETS AND THE OPENINGS FOR UTILITY PIPING SHALL BE LAPPED AND TAPED. IF THE BARRIER IS NOT CONTINUOUSLY PLACED ACROSS FOOTINGS/RIBS, THE BARRIER SHALL, AS A MINIMUM, BE LAPPED INTO THE SIDES OF THE FOOTINGS/RIB TRENCHES DOWN TO THE BOTTOM OF THE TRENCH.

C. PUNCTURES IN THE VAPOR BARRIER SHALL BE REPAIRED PRIOR TO CONCRETE PLACEMENT. INSTALLATION PROCEDURES AS ASTM E1643-98.

5.SLABS ON GRADE SHALL BE SUPPORTED ON THE INSTALLED LTP APPROVED BY THE GEOTECHNICAL (GMU) ENGINEER PRIOR TO THE PLACEMENT OF THE MOISTURE BARRIER.

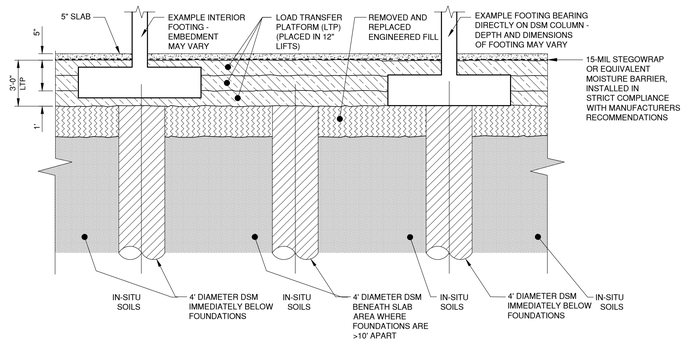

A Typical DSM Support of Buildings 1, 6-12
Scale: 1" = 4'

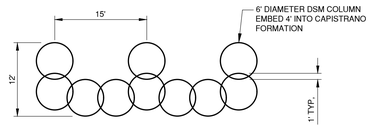

B DSM BUTTRESS Detail
Scale: 1" = 10'

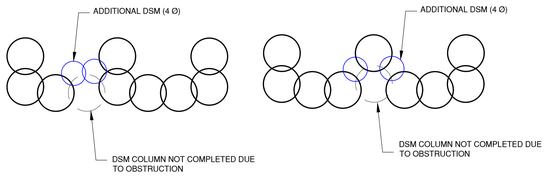

C EXAMPLE LAYOUT FOR MITOGATION OPTION
Scale: 1" = 10'

Zoning: Cannings 11/13/2024

Buildings/Safety: OCPW/Zervanos 12/22/2025

Permits: BNR21-0246, ELE21-0853, MEC21-0516, PLB21-0900

County of Orange - OC Public Works
OC Development Services
APPROVED
This set of plans and specifications must be kept on the job at all times. It is unlawful to make any changes or alterations to these plans without written permission from OC Public Works, OC Development Services of Orange County. The stamping of these plan specifications SHALL NOT be held to permit or be an approval of the violation of any provisions of any County Ordinance or State law.
Hani Tahsbsaee
BUILDING OFFICIAL

SMSARCH
18004 Sky Park Circle, #200
Irvine, California 92614
Ph. 949.757.3240
www.sms-arch.com

CONSTANT
GMU
23241 Arroyo Vista
Rancho Santa Margarita
California 92688
Voice: 949.888.6515
Fax: 949.888.1380
Web: www.gmugeo.com

DANA POINT HARBOR PARTNERS

PROJECT NAME
DANA POINT HARBOR BUILDING 1, 6 - 12
34501 - 34601 GOLDEN LANTERN
DANA POINT, CA 92629

BWP BURNHAM|WARD PROPERTIES

GEOTECHNICAL ENGINEER

GREGORY SILVER PE GE 2336

No.	DATE	ISSUE

DRAWINGS AND WRITTEN MATERIAL APPEARING HEREIN CONSTITUTE ORIGINAL AND UNPUBLISHED WORK OF SMS ARCHITECTS AND MAY NOT BE DUPLICATED, USED OR DISCLOSED WITHOUT WRITTEN CONSENT OF THE ARCHITECT

PROJECT NO. Project 1900799
DATE Issue Date

DRAWING TITLE
GEOTECHNICAL DETAILS FOR REFERENCE ONLY

DRAWING NO.
G0.0.1

6/19/2014 4:51:29 PM

File Path: DRAWING: q:\2017\17-206-02\dwg\1720602_dph_commcor_gen notes & details.dwg PLOTTED: 12/15/2021 1:56 PM BY: Matt Farrington

MECHANICAL NOTES AND SPECIFICATIONS

1. GENERAL

A. CONTRACTOR SHALL PERFORM ALL WORK AS TO CONFORM TO LOCAL, STATE AND NATIONAL CODES AND THE REQUIREMENTS OF LOCAL AUTHORITIES HAVING JURISDICTION.

B. CONTRACTOR SHALL FURNISH LABOR, MATERIALS, EQUIPMENT, AND TRANSPORTATION AS REQUIRED TO PROPERLY INSTALL ALL NEW HVAC SYSTEMS OR RELATED COMPONENTS AS INDICATED ON PLANS AND SPECIFIED HEREIN.

C. CONTRACTOR SHALL COORDINATE HIS WORK WITH ALL OTHER TRADES PRIOR TO FABRICATION, PURCHSE, AND/OR INSTALLATION OF ALL WORK.

D. CONTRACTOR TO EXAMINE THE SITE TO DETERMINE THE EXACT CONDITIONS EFFECTING THE MECHANICAL WORK. THE CONTRACTOR SHALL VERIFY ALL DIMENSIONS NOTED ON THE PLANS.

E. DRAWINGS INDICATE THE GENERAL SCHEME OF THE INSTALLATION AND ARE DIAGRAMMATIC IN SCOPE. THE ENGINEER RESERVES THE RIGHT TO CHANGE THE LOCATION OF DUCTWORK, PIPING, DIFFUSERS, APPARATUS, ETC. TO A REASONABLE EXTENT AS THE BUILDING CONDITIONS MAY DICTATE PRIOR TO THEIR INSTALLATION WITHOUT EXTRA COST TO THE OWNER. THE EXACT LOCATION AND ARRANGEMENT OF ALL EQUIPMENT AND PARTS SHALL BE DETERMINED AS THE WORK PROGRESSES.

F. DETAILS OF CONSTRUCTION AND OF WORKMANSHIP WHERE NOT SPECIFICALLY DESCRIBED HEREIN OR INDICATED ON THE DRAWINGS SHALL BE SUBJECT TO THE ENGINEER'S APPROVAL. IT IS THE INTENT OF THESE SPECIFICATIONS TO PROVIDE COMPLETE SYSTEMS, CONSTRUCTED WITH NEW AND FIRST QUALITY MATERIALS AND EQUIPMENT, LEFT IN GOOD WORKING ORDER, READY FOR OPERATION.

G. SCRAP, DEBRIS AND ABANDONED HVAC EQUIPMENT/DUCTWORK/SUPPORTS/CONTROLS AND ACCESSORIES SHALL EXCEPT AS OTHERWISE SPECIFIED, BE REMOVED FROM THE SITE AND DISPOSED OF BY THIS CONTRACTOR.

H. THE CONTRACTOR SHALL BE RESPONSIBLE FOR START-UP OF ALL SYSTEMS.

I. ALL WORK SHALL BE DONE WITH A MINIMUM OF DUST AND DIRT. PROVIDE SUFFICIENT FIREPROOF TARPAULINS AND COVER ALL EQUIPMENT IN WORK AREA WITH SAME DURING WORK OPERATIONS.

J. CONTRACTOR SHALL FURNISH SHOP DRAWINGS AND EQUIPMENT CUTS TO THE ARCHITECT FOR APPROVAL [MINIMUM FIVE(5) COPIES]. THE ENGINEER'S APPROVAL SHALL NOT RELIEVE THE CONTRACTOR FROM HIS OBLIGATION TO COMPLY WITH THE INFORMATION CONTAINED IN THE CONTRACT DOCUMENTS.

K. CONTRACTOR SHALL COORDINATE CONNECTIONS TO STREET WITH LOCAL UTILITY COMPANY(S).

L. LINE VOLTAGE WIRING, LINE VOLTAGE CONDUIT, UNDERGROUND LOW VOLTAGE CONDUIT, DISCONNECT SWITCHES AND FINAL CONNECTION BY ELECTRICAL CONTRACTOR. LOW VOLTAGE WIRING, ABOVE GROUND LOW VOLTAGE CONDUIT, AND FINAL CONNECTION BY CONTROLS CONTRACTOR.

M. UNLESS SPECIFICALLY SHOWN ON THESE PLANS, NO STRUCTURAL MEMBERS SHALL BE CUT, DRILLED, NOR NOTCHED WITHOUT PRIOR WRITTEN AUTHORIZATION FROM THE STRUCTURAL ENGINEER AND/OR THE CITY OF PALM SPRINGS AHJ.

N. ALL DUCT SIZES SHOWN ARE NET INSIDE DIMENSIONS AND DO NOT ACCOUNT FOR DUCT LINER THICKNESS WHERE APPLICABLE. ALL PIPE DIMENSIONS SHOWN ARE NOMINAL SIZES.

O. CONTRACTOR SHALL FILE, SECURE AND PAY FOR ANY NECESSARY APPROVALS, PERMITS, LICENSES AND INSPECTIONS WHICH ARE REQUIRED BY ANY LEGALLY CONSTITUTED AUTHORITY.

P. CONTRACTOR SHALL NOT ALLOW OR CAUSE ANY OF HIS WORK TO BE COVERED UP OR CLOSED IN UNTIL IT HAS BEEN INSPECTED, TESTED, AND APPROVED BY ALL AUTHORITIES HAVING JURISDICTION. SHOULD ANY OF HIS WORK BE COVERED UP OR CLOSED IN BEFORE SUCH INSPECTION, HE SHOULD, AT HIS OWN EXPENSE, UNCOVER THE WORK TO THE SATISFACTION OF THE INSPECTION PARTY.

Q. ALL WORK SHALL BE IN STRICT CONFORMANCE WITH THE LATEST EDITION OF T HE CALIFORNIA MECHANICAL CODE (CMC), CALIFORNIA BUILDING CODE (CBC), AND TITLE 24 PART 4 & 6.

R. PRIOR TO TESTING, CONTRACTOR SHALL MAKE ALL SYSTEM ADJUSTMENTS REQUIRED FOR PROPER OPERATION. ADJUSTMENTS SHALL INCLUDE AIR BALANCING, HYDRONIC BALANCING, ETC. AN ADDITIONAL COMFORT BALANCE SHALL BE PROVIDED WITHIN A YEAR OF ACCEPTANCE OF THE COMPLETED PROJECT IF REQUESTED.

S. ALL SYSTEMS SHALL BE TESTED IN ACCORDANCE WITH SMACNA AND THE LOCAL ENERGY CODE.

T. CONTRACTOR SHALL BE RESPONSIBLE FOR DISCONNECTING ALL FACILITIES IN AREAS INDICATED FOR DEMOLITION ON THE ARCHITECTURAL DRAWINGS.

U. WHERE DEMOLITION OF EXISTING SERVICES RESULTS IN THE INTERRUPTION OF DUCTWORK, MECHANICAL PIPING, ETC. SERVING AREAS WHICH ARE TO REMAIN, INSTALL BYPASS CONNECTIONS AS REQUIRED TO RESTORE REMAINING SERVICES TO OPERATION. SIZING, MATERIAL, JOINTINGS, AND INSULATION OF BYPASS CONNECTIONS SHALL MATCH EXISTING INSTALLATION.

V. LABEL ALL ROOF MOUNTED EQUIPMENT AS TO THE SPACE IT SERVES.

W. THE CONTRACTOR'S PROPOSAL AND BASE BID MUST COVER ALL ITEMS IN THE PLANS AND SPECIFICATIONS/NOTES EXACTLY AS DRAWN, NOTED, SCHEDULED, DETAILED AND SPECIFIED. TO RECEIVE CONSIDERATION FOR A SUBSTITUTION OF MATERIALS AND/OR EQUIPMENT, THE CONTRACTOR MUST INCLUDE THE FOLLOWING INFORMATION WITH HIS BASE BID:

- DOCUMENTATION OF EQUALITY. A SIDE-BY-SIDE COMPARISON, OF PERFORMANCE AND CONSTRUCTION MATERIALS, BETWEEN THE SPECIFIED ITEM AND THE PROPOSED SUBSTITUTION.
- THE DOLLAR VALUE FOR CREDIT, ASSOCIATED WITH THE SUBSTITUTED ITEM(S), SHALL BE ITEMIZED IN THE BASE BID.
- CONTRACTOR SHALL PROVIDE AS-BUILTS, CAD GENERATED AND DRAWN TO 1/4" = 1'-0" SCALE. SUBMIT 6 SETS OF HARD COPIES AND 1 ELECTRONIC COPY. CAD DRAWINGS SHALL BE AUTOCAD LATEST VERSION. COORDINATE CLOSE OUT REQUIREMENTS WITH ARCHITECT AND OWNER.

2. SCOPE OF WORK

THE WORK SHALL INCLUDE BUT NOT BE LIMITED TO THE FOLLOWING:

A. FURNISH AND INSTALL ALL NEW SUPPLY, RETURN AND EXHAUST AIR DUCTWORK.

B. FURNISH AND INSTALL INSULATION FOR ALL SUPPLY AIR DUCTWORK.

C. FURNISH AND INSTALL, AS SHOWN ON DRAWINGS ALL WALL MOUNTED THERMOSTATS. MECHANICAL CONTRACTOR SHALL FURNISH AND INSTALL ALL NECESSARY WIRING REQUIRED FOR THERMOSTATS.

D. FURNISH AND INSTALL ALL SUPPLY AIR DIFFUSERS, RETURN AIR GRILLES, RETURN AIR REGISTERS AND EXHAUST AIR REGISTERS (SIZES AS SHOWN ON SCHEDULES AND PLANS).

E. FURNISH AND INSTALL ALL CEILING MOUNTED CABINET EXHAUST FANS AS SHOWN ON DRAWINGS AND SPECIFIED IN SCHEDULES.

F. FURNISH AND INSTALL ALL HEATING, VENTILATING AND AIR CONDITIONING UNITS AS SHOWN ON DRAWINGS AND SPECIFIED IN SCHEDULES.

G. FURNISH AND INSTALL ALL IN LINE CENTRIFUGAL FANS AS SHOWN ON DRAWINGS AND SPECIFIED IN SCHEDULES.

H. FURNISH AND INSTALL ALL HANGERS AND SUPPORTS.

I. FURNISH AND INSTALL ALL FURNACES, DX COOLING COILS, AIR COOLED CONDENSING UNITS AND REFRIGERANT LINES AS SHOWN ON DRAWINGS AND SPECIFIED IN SCHEDULES.

J. FURNISH AND INSTALL MANUAL VOLUME DAMPERS AS SHOWN ON DRAWINGS.

K. FURNISH AND INSTALL ALL GRAVITY RELIEF HOODS, GRAVITY INTAKE HOODS, AND ROOF CAPS AS SHOWN ON DRAWINGS.

L. SHOP DRAWINGS.

M. ALTERATIONS, REMOVALS, AND DISPOSAL.

N. CUTTING AND ROUGH PATCHING.

O. OBTAINING AND PAYING FOR ALL NECESSARY PERMITS, INSPECTIONS AND CERTIFICATES REQUIRED IN CONNECTION WITH THIS WORK.

P. FURNISH AND INSTALL ALL TRANSFER AIR WALL OPENINGS AND ALL TRANSFER AIR DUCTWORK.

Q. REMOVE AND CAP ALL WORK INDICATED ON THE DRAWINGS.

R. FURNISH AND INSTALL AS SHOWN ON DRAWINGS ALL INTERNAL ACOUSTIC LINING FOR SUPPLY AND RETURN DUCTWORK AS WHERE CALLED FOR.

S. RELOCATE AS SHOWN ON DRAWINGS EXISTING WALL MOUNTED THERMOSTATS. MECHANICAL CONTRACTOR SHALL FURNISH AND INSTALL ALL NECESSARY WIRING REQUIRED FOR THERMOSTAT RELOCATION. REMOVE AND RELOCATE ALL SUPPLY AIR DIFFUSERS, RETURN AIR GRILLES, RETURN AIR REGISTERS AND EXHAUST AIR REGISTERS AS SHOWN ON PLANS.

T. FURNISH AND INSTALL ALL ACCESS DOORS AND FIRE DAMPERS AS REQUIRED BY THE BUILDING CODE.

U. FURNISH AND INSTALL ALL CONTROLS, CONTROL WIRING, TRANSFORMERS, ETC. ASSOCIATED WITH THE ROOFTOP HVAC UNIT AND THE AIR COOLED CONDENSING UNIT AS SPECIFIED HEREIN AND SHOWN ON DRAWINGS.

V. FURNISH AND INSTALL ROOF MOUNTED AIR COOLED CONDENSING UNITS AS SHOWN ON PLANS AND SPECIFIED IN SCHEDULE.

W. FURNISH AND INSTALL INSULATION FOR ALL REFRIGERATION PIPING.

X. FURNISH AND INSTALL SPLIT-SYSTEM HEAT PUMPS AND REFRIGERANT PIPING AS SHOWN ON THE DRAWINGS AND SPECIFIED IN SCHEDULES.

Y. FURNISH AND INSTALL ALL CONTROLS, CONTROL WIRING, TRANSFORMERS, ETC. ASSOCIATED WITH THE HVAC SYSTEMS AS SPECIFIED HEREIN AND SHOWN ON DRAWINGS. ELECTRICAL CONTRACTOR SHALL FURNISH AND INSTALL ALL LINE VOLTAGE WIRING.

Z. ALL FANS FOR AIR HANDLERS, PACKAGED ROOFTOP UNITS, SUPPLY FANS, EXHAUST FANS, ETC., SHALL BE PROVIDED WITH ADJUSTABLE SHEAVES ON MOTOR DRIVE AND FIXED SHEAVE ON DRIVEN EQUIPMENT. SHEAVES SHALL BE SELECTED SUCH THAT DESIGN CFM IS ACHIEVED WITH DESIGN STATIC PRESSURE AT THE MIDRANGE OF THE SHEAVE ADJUSTMENT. WHERE ADJUSTABLE SHEAVES ARE NOT AVAILABLE FROM THE FACTORY FOR PACKAGED EQUIPMENT, CONTRACTOR SHALL CHANGE OUT MOTOR SHEAVES IN THE FIELD. ALL ADJUSTABLE SHEAVES, GROOVE SIZES AND QUANTITIES SHALL BE SELECTED TO MATCH FACTORY INSTALLED SHEAVES ON DRIVEN EQUIPMENT. ALL SHEAVES SHALL BE MANUFACTURED BY BROWNING OR APPROVED EQUAL.

3. WORK NOT INCLUDED

THE FOLLOWING ITEMS OF WORK SHALL BE PROVIDED UNDER OTHER CONTRACTS:

A. FINISHED PATCHING AND PAINTING

4. NOISE CONTROL

A. ALL INSTALLATION SHALL BE IN A MANNER THAT THE NOISE CRITERIA LEVEL IN THE SPACE SHALL NOT EXCEED NC=35. NOISE LEVELS ABOVE THIS LIMIT WILL NOT BE ACCEPTED AND SHOULD BE CORRECTED BY THIS CONTRACTOR AT NO EXPENSE TO THE OWNER.

B. ALL SUPPLY AND RETURN DUCTWORK SHALL BE PROVIDED WITH 1" INTERNAL ACOUSTIC LINING AT LEAST 20' FROM EACH AIR HANDLING UNIT. ALL DUCTWORK DIMENSIONS NOTED ON THE PLANS ARE CLEAR INSIDE DIMENSIONS.

5. VIBRATION CONTROL

A. ALL INSTALLATIONS SHALL BE IN SUCH A MANNER THAT VIBRATION FROM ROTATING EQUIPMENT IS ISOLATED FROM DUCTWORK, PIPING AND THE BUILDING STRUCTURE.

B. FLEXIBLE CONNECTIONS SHALL BE PROVIDED AT ALL LOCATIONS WHERE RIGID DUCTWORK CONNECTS TO FANS, AIR HANDLERS, OR OTHER EQUIPMENT CAPABLE OF PRODUCING OBJECTIONABLE VIBRATION. FLEXIBLE CONNECTIONS SHALL BE 30 OZ. NEOPRENE COATED FABRIC SECURED WITH HEAVY DUTY BANDS OR CRIMPS.

C. FLEXIBLE CONNECTIONS SHALL BE PROVIDED AT ALL LOCATIONS WHERE PIPING CONNECTS TO PUMPS OR OTHER EQUIPMENT CAPABLE OF PRODUCING OBJECTIONABLE VIBRATION.

D. ALL EQUIPMENT SUPPORTED FROM THE BUILDING STRUCTURE SHALL BE PROVIDED WITH SPRING-TYPE VIBRATION ISOLATORS.

6. SHEET METAL DUCTWORK

A. ALL DUCTWORK, UNLESS OTHERWISE NOTED, SHALL BE BUILT FROM GALVANIZED SHEET STEEL IN COMPLIANCE WITH CHAPTER 6 OF THE UMC AND THOROUGHLY BRACED & STIFFENED. ALL DUCTWORK DIMENSIONS NOTED ON THE PLANS ARE CLEAR INSIDE DIMENSIONS.

B. FABRICATION OF SHEET METAL DUCTS SHALL BE IN ACCORDANCE WITH RECOMMENDATIONS OF ASHRAE, LATEST EDITION, OR AS PER SMACNA DUCT CONSTRUCTION MANUAL(S). ALL BRANCH DUCTWORK AND TAKE-OFFS SHALL BE PROVIDED WITH VOLUME DAMPERS.

C. CONTRACTOR SHALL SEAL ALL DUCTWORK JOINTS WITH 3M EC-800 OR APPROVED EQUAL.

D. UNLESS OTHERWISE NOTED, ALL DUCTWORK SHALL BE CONCEALED WITHIN CEILINGS, WALLS, FLOORS AND SHAFTS.

E. ALL DUCTWORK GAUGES, AND INSTALLATION SHALL CONFORM TO THE LATEST EDITION OF SMACNA STANDARDS.

F. ACCESS DOORS IN DUCTWORK SHALL BE DOUBLE PANEL NO. 20 GAUGE GALVANIZED STEEL, FILLED WITH 1-1/2" RIGID FIBERGLASS, 3 LB. DENSITY INSULATION, WITH NO. 20 GAUGE GALVANIZED STEEL FRAME, SECURELY FASTENED TO DUCT AND FORMED TO RECEIVE ACCESS DOOR. PROVIDE TWO LATCHES AND TWO HINGES PER DOOR. WHERE SPACE CONDITIONS DO NOT PERMIT HINGING OF DOORS, PROVIDE FOUR LATCHES PER DOOR FOR REMOVAL.

G. FIRE DAMPERS SHALL BE COORDINATED WITH THE LEVEL OF FIRE RATING INDICATED ON THE ARCHITECTURAL DRAWINGS. FIRE DAMPERS SHALL BE AS MANUFACTURED BY POTTORFF, MODEL FSD-172 OR EQUIVALENT.

H. FIRE DAMPERS SHALL BE INSTALLED IN ACCORDANCE WITH THE MANUFACTURER'S APPROVED INSTALLATION INSTRUCTIONS AND SHALL BE UNDERWRITER'S LABORATORIES (U.L.) APPROVED AND LABELED.

I. CHANGES IN SHAPE AND DIMENSION SHALL CONFORM TO THE FOLLOWING:

- EXCEPT WHERE OTHERWISE NOTED, FOR INCREASES IN CROSS-SECTIONAL AREA, THE SHAPE OF THE TRANSFORMATION SHALL NOT EXCEED 1" IN 7", SPACE CONDITIONS PERMITTING.
- EXCEPT WHERE OTHERWISE NOTED, FOR REDUCTIONS IN AREA, THE SLOPE SHALL NOT BE LESS THAN 1" IN 7", SPACE CONDITIONS PERMITTING.

J. MECHANICAL CONTRACTOR SHALL COORDINATE WITH THE GENERAL CONTRACTOR FOR EXACT LOCATION AND SIZES OF ROOF OPENINGS.

K. THE CONSTRUCTION FOR LOW PRESSURE RECTANGULAR SHEET METAL DUCTS SHALL BE MADE IN ACCORDANCE WITH RECOMMENDATIONS OF ASHRAE GUIDE, LATEST EDITION, OR AS PER SMACNA MANUAL BUT NOT LESS THAN THE FOLLOWING WEIGHTS AND CONSTRUCTION:

DIMENSION OF LONGEST SIDE OF DUCT (INCHES)	MINIMUM GAUGE OF SHEET METAL FOR ALL FOUR SIDES OF DUCT		TRANSVERSE REINFORCING AT AND BETWEEN DUCT JOINTS
	STEEL (GAUGE)	ALUMINUM THICKNESS (INCHES)	
UP THRU 12	26	0.020	1" POCKET LOCK 24 GAUGE, STANDING SEAM JOINT 24 GAUGE, 1" STANDING S SLIP 24 GAUGEJOINT MAX. ON 6' CENTERS.
13 THRU 18	24	0.025	1" POCKET LOCK 24 GAUGE, STANDING SEAM JOINT 24 GAUGE, 1" STANDING S SLIP 24 GAUGEJOINT MAX. ON 6' CENTERS.
19 THRU 30	24	0.025	1" POCKET LOCK 22 GAUGE, JOINT MAX. ON 6' CENTERS WITH 1" X 1" X 1/8" ANGLES 4' FROM JOINT.

L. FLAT AREAS OF DUCT OVER 18 IN. WIDE SHALL BE STIFFENED BY CROSS BREAKING OF BEADING.

M. ALL JOINTS SHALL HAVE CORNER CLOSURES.

N. RECTANGULAR DUCTS WITH A MAXIMUM SIDE NOT EXCEEDING 30" SHALL HAVE 1" WIDE 18-GAUGE METAL STRAPS. SUPPORT DUCT ON OPPOSITE SIDES WITH SHEET METAL SCREWS TO THE SIDES AND BOTTOM. VERTICAL DUCTS SHALL BE SUPPORTED BY GALVANIZED STEEL ANGLES AND SECURED TO THE DUCTS AND WALL SUPPORTS.

O. AIR MOVING SYSTEMS SUPPLYING AIR AT 2000 CFM OR MORE TO ENCLOSED SPACES WITHIN A BUILDING OR AREA MUST BE EQUIPPED WITH AN AUTOMATIC SHUT-OFF AND SMOKE DETECTION SYSTEM.

7. FLEXIBLE DUCTWORK

A. FINAL CONNECTION TO CEILING DIFFUSERS OR REGISTERS SHALL BE PRE-INSULATED ALUMINUM FLEX DUCT WITH VAPOR BARRIER AND SUPPORTED BY HELICALLY WOUND, SPRING STEEL WIRE. ALUMINUM FLEX DUCTS SHALL MEET U.L. 181 CLASS 1 AIR DUCT STANDARDS. THE MAXIMUM LENGTH SHALL NOT EXCEED 5 FT. IN LENGTH.

B. ALL FLEXIBLE DUCTWORK SHALL BE SECURED USING HEAVY DUTY, STAINLESS STEEL CLAMPS.

8. PIPING

A. ALL PIPE SHALL BE NEW, FREE FROM SCALE OR RUST, OF THE MATERIAL AND WEIGHT SPECIFIED UNDER THE VARIOUS SERVICES. EACH LENGTH OF PIPE SHALL BE PROPERLY MARKED AT THE MILL FOR PROPER IDENTIFICATION WITH NAME OR SYMBOL OF MANUFACTURER.

B. ALL REFRIGERANT PIPING SHALL BE TYPE ACR COPPER TUBING.

C. ALL CONDENSATE PIPING SHALL BE TYPE L COPPER TUBING.

D. PROVIDE NECESSARY STRUCTURAL MEMBERS, HANGERS AND SUPPORTS OF APPROVED DESIGN TO KEEP PIPING IN PROPER ALIGNMENT AND PREVENT TRANSMISSION OF INJURIOUS THRUSTS AND VIBRATIONS. IN ALL CASES WHERE HANGERS, BRACKETS, ETC., ARE SUPPORTED FROM METAL DECKING AND/OR CONCRETE CONSTRUCTION, CARE SHALL BE TAKEN NOT TO WEAKEN DECKING AND/OR CONCRETE OR PENETRATE WATERPROOFING. ALL HANGERS AND SUPPORTS SHALL BE CAPABLE OF SCREW ADJUSTMENT AFTER PIPING IS ERECTED. HANGERS SUPPORTING PIPING EXPANDING INTO LOOPS, BENDS AND OFFSETS SHALL BE SECURED TO THE BUILDING STRUCTURE IN SUCH A MANNER THAT HORIZONTAL ADJUSTMENT PERPENDICULAR TO THE RUN OF PIPING SUPPORTED MAY BE MADE TO ACCOMMODATE DISPLACEMENT DUE TO EXPANSION. ALL SUCH HANGERS SHALL BE FINALLY ADJUSTED, BOTH IN THE VERTICAL AND HORIZONTAL DIRECTION, WHEN THE SUPPORTED PIPING IS HOT OR CHILLED, AS REQUIRED.

E. ALL VERTICAL PIPING SHALL BE ANCHORED BY MEANS OF HEAVY STEEL CLAMPS SECURELY BOLTED OR WELDED TO THE PIPING AND WITH END EXTENSION BEARING ON THE BUILDING.

F. ALL PIPING SHALL BE ERECTED SO AS TO ENSURE A PERFECT AND NOISELESS CIRCULATION THROUGHOUT THE SYSTEM.

G. ALL VALVES AND SPECIALTIES SHALL BE SO PLACED AS TO PERMIT EASY OPERATION AND ACCESS.

H. PROVIDE PROPER PROVISION FOR EXPANSION AND CONTRACTION IN ALL PORTIONS OF PIPEWORK, TO PREVENT UNDUE STRAINS ON PIPING OR APPARATUS CONNECTED THEREWITH. PROVIDE DOUBLE SWINGS AT RISER TRANSFERS AND OTHER OFFSETS WHEREVER POSSIBLE TO TAKE UP EXPANSION. ARRANGE RISER BRANCHES TO TAKE UP MOTION OF RISER.

I. THE ENDS OF ALL PIPE AND NIPPLES SHALL BE THOROUGHLY REAMED TO THE FULL INSIDE DIAMETER OF THE PIPE AND ALL BURRS FORMED IN THE CUTTING OF THE PIPES SHALL BE REMOVED.

J. PIPING SHALL BE INSTALLED IN ACCORDANCE WITH THE LATEST EDITION OF THE ASME CODE FOR PRESSURE PIPING.

K. PIPING AT ALL EQUIPMENT AND CONTROL VALVES SHALL BE SUPPORTED TO PREVENT STRAINS OR DISTORTIONS IN THE CONNECTED EQUIPMENT AND CONTROL VALVES. PIPING SHALL BE SUPPORTED TO ALLOW FOR REMOVAL OF EQUIPMENT, VALVES AND ACCESSORIES WITH A MINIMUM OF DISMANTLING AND WITHOUT REQUIRING ADDITIONAL SUPPORTS AFTER THESE ITEMS ARE REMOVED.

L. MISCELLANEOUS DRAINS, VENTS, RELIEFS, AND OVERFLOWS FROM TANKS, EQUIPMENT, PIPING, RELIEF VALVES, PUMPS, ETC., SHALL BE RUN TO THE NEAREST OPEN SIGHT DRAIN. PROVIDE DRAIN VALVES WHENEVER REQUIRED FOR COMPLETE DRAINAGE OF PIPING, INCLUDING THE SYSTEM SIDE OF ALL PUMPS.

9. ADJUSTING

A. ALL DUCT INSULATION SHALL HAVE COMPOSITE (INSULATION, JACKET FACING AND ADHESIVE USED TO ADHERE JACKET OR FACING TO THE INSULATION) FIRE AND SMOKE HAZARD RATINGS AS TESTED BY PROCEDURE ASTM E-84, NFPA 255 AND UL 73, NOT EXCEEDING FLAME SPREAD OF 25, FUEL CONTRIBUTED OF 50 AND SMOKE DEVELOPED OF 50. ACCESSORIES SUCH AS ADHESIVES, MASTICS, CEMENTS, TAPES AND CLOTHS FOR FITTINGS SHALL HAVE COMPONENT RATINGS AS LISTED ABOVE.

B. THE MATERIALS AS SPECIFIED BELOW HAVE BEEN SELECTED FROM THE CATALOG OF OWENS-CORNING FIBERGLASS CORPORATION AND ARE REPRESENTATIVE OF THE QUALITY, DESIGN AND FINISH AS DESIRED. INSULATION AS MANUFACTURED BY OTHER MANUFACTURERS MAY BE SUBMITTED FOR APPROVAL, PROVIDED THE PRODUCTS MEET FULLY IN ALL RESPECTS (SUCH AS DENSITY MOISTURE ABSORPTION, ALKALINITY, THERMAL-CONDUCTIVITY, JACKET, ETC.) TO THE MATERIALS AS DELINEATED BELOW.

C. INSULATE ALL NEW SUPPLY, RETURN AND OUTDOOR AIR INTAKE DUCTWORK EXPOSED IN ATTICS, CRAWL SPACES, BOILER ROOMS, ETC. WITH 2" FIBERGLASS BLANKET AND VAPOR BARRIER. INSTALL INSULATION AFTER DUCTWORK HAS BEEN INSPECTED AND APPROVED.

D. LINED DUCTS SHALL BE INTERNALLY LINED WITH 1" THICK DUCT LINER.

E. PIPE INSULATION SHALL BE HEAVY DENSITY FIBERGLASS SECTIONAL PIPE INSULATION WITH A MAXIMUM K FACTOR OF 0.23 AT 75 DEGREES F MEAN TEMPERATURE WITH FACTORY APPLIED ALL SERVICE VAPOR BARRIER JACKET. DENSITY SHALL BE NOT LESS THAN 3 LBS. PER CUBIC FEET.

F. INSULATE ALL REFRIGERANT LINES PER SECTION 120.3 OF THE CALIFORNIA ENERGY CODE.

G. INSULATE ALL CONDENSATE LINES WITH 1" FLEXIBLE ELASTOMERIC INSULATION.

10. SHOP DRAWINGS

A. PRIOR TO ISSUING SHOP DRAWING SUBMITTALS FOR THE ENGINEER'S REVIEW, THE CONTRACTOR SHALL BE RESPONSIBLE TO REVIEW ALL OF THE SUBMITTAL DATA. THE CONTRACTOR SHALL STAMP EACH SHOP DRAWING CERTIFIYING THAT THE CONTRACTOR'S REVIEW HAS BEEN COMPLETED AND THAT COORDINATION HAS BEEN ESTABLISHED.

B. THE CONTRACTOR SHALL BE RESPONSIBLE TO COORDINATE HIS WORK WITH THE WORK OF ALL OTHER TRADES. ALL SHOP DRAWINGS SHALL ILLUSTRATE THAT COORDINATION HAS BEEN ESTABLISHED. FOR SHEETMETAL, PIPING AND EQUIPMENT LAYOUTS COMPOSITE DRAWINGS SHALL BE SUBMITTED. FIELD RELATED CONFLICTS SHALL BE RESOLVED BE THIS CONTRACTOR.

C. SUBMIT SHOP DRAWINGS [PROVIDE A MINIMUM OF FIVE(5) COPIES TO ARCHITECT FOR ENGINEERS APPROVAL] COVERING THE FOLLOWING ITEMS:

1. DUCTWORK.
2. DUCT INSULATION.
3. PIPING.
4. PIPE HANGERS AND SUPPORTS.
5. PIPE INSULATION.
6. DIFFUSERS, REGISTERS AND GRILLES.
7. FANS.
8. DAMPERS.
9. PACKAGED HEATING AND COOLING EQUIPMENT.
10. AIR HANDLERS.
11. FAN COIL UNITS.
12. CONTROLS.
13. FILTERS.
14. AIR BALANCING REPORT.

D. THE ENGINEER'S SHOP DRAWING APPROVAL SHALL NOT RELIEVE THE CONTRACTOR OF HIS RESPONSIBILITY TO COMPLY WITH ALL OF THE INFORMATION INDICATED IN THE CONTRACT DOCUMENTS (i.e. PLANS, SCHEDULES, DETAILS, NOTES AND SPECIFICATIONS ETC.).

E. EQUIPMENT SUBMITTALS FOR MECHANICAL EQUIPMENT SHALL BE SUBMITTED TO THE ARCHITECT AND ENGINEER FOR APPROVAL PRIOR TO ORDERING AND SHIPPING OF SUCH EQUIPMENT. ANY SUBSTITUTIONS SHALL BE IN SUBMITTAL FORMS WITHOUT EXCEPTION. SUBSTITUTION SHALL ALSO BE APPROVED BY THE LANDLORD.

F. THREE(3) MANUALS SHALL BE PREPARED INCLUDING PART NUMBERS OF ALL REPLACEMENT PARTS, OILING AND LUBRICATION INSTRUCTIONS, & AIR FLOW AND AIR BALANCE REPORTS. A MAINTENANCE SCHEDULE LISTING ALL REQUIRED MAINTENANCE EQUIPMENT FURNISHED UNDER THIS SECTION OF THE SPECIFICATIONS SHALL ALSO BE PROVIDED.

11. TESTS AND BALANCING

A. THE WORK OF THIS CONTRACTOR SHALL INCLUDE THE FURNISHING OF ALL TESTING INSTRUMENTS, GAUGES, AND OTHER EQUIPMENT REQUIRED FOR NECESSARY TESTS, REQUIRED BY LAW, RULES AND REGULATIONS AND AS SPECIFIED.

B. NO VISIBLE LEAKS, LOSSES IN PRESSURE, OR INCREASE IN VACUUM SHALL OCCUR DURING TEST PERIOD.

C. PROVIDE ALL OTHER TESTS REQUIRED BY BUILDING DEPARTMENT, FIRE DEPARTMENT AND ALL OTHER PUBLIC AGENCIES HAVING JURISDICTION.

D. TESTS SHALL BE PERFORMED IN THE PRESENCE AND TO THE SATISFACTION OF THE ARCHITECT AND SUCH OTHER PARTIES AS MAY HAVE LEGAL JURISDICTION.

E. OPERATE THE INSTALLATION AFTER COMPLETION FOR PERIOD NECESSARY TO MAKE ALL REQUIRED ADJUSTMENTS FOR AUTOMATIC CONTROLS, AIR OUTLETS AND FANS, UNTIL ALL PERFORMANCE CHARACTERISTICS ARE MET.

F. ENGAGE THE SERVICES OF APPROVED INDEPENDENT AIR BALANCING COMPANY TO BALANCE THE SYSTEM AND ISSUE AN AIR BALANCING REPORT FOR ENGINEER'S APPROVAL. THE INDEPENDENT AIR BALANCING COMPANY SHALL BE SUBJECT TO THE ENGINEER'S APPROVAL. THE TEST SHALL BE PERFORMED BY A PERSON HAVING A MINIMUM OF 5 YEARS EXPERIENCE IN TESTING AND BALANCING AIR SYSTEMS.

G. UPON COMPLETION OF THE INSTALLATION, THE AIR BALANCE AND TESTING SUBCONTRACTOR SHALL MAKE THE NECESSARY ADJUSTMENTS TO BALANCE THE SYSTEM TO WITHIN 5% OF THE INDICATED VALUES. PROVIDE ANY EXTRA MANUAL VOLUME DAMPERS REQUIRED FOR PROPER AIR BALANCE.

H. AT THE COMPLETION OF THE TEST, THE CONTRACTOR SHALL FURNISH THE ARCHITECT SEVEN (7) COPIES OF THE FINAL TEST REPORT.

12. GUARANTEE

A. THE CONTRACTOR GUARANTEES BY HIS ACCEPTANCE OF THE CONTRACT THAT ALL WORK INSTALLED WILL BE FREE FROM ANY AND ALL DEFECTS FOR A PERIOD OF ONE(1) YEAR FROM DATE OF COMPLETION AND ACCEPTANCE OF WORK.

B. THE CONTRACTOR GUARANTEES BY HIS ACCEPTANCE OF THE CONTRACT THAT ALL MECHANICAL EQUIPMENT INSTALLED WILL BE GUARANTEED BY THE MANUFACTURER FOR A PERIOD OF FIVE(5) YEARS FROM DATE OF COMPLETION AND ACCEPTANCE OF WORK.

C. THE CONTRACTOR GUARANTEES BY HIS ACCEPTANCE OF THE CONTRACT THAT ALL GUARANTEES WILL BE TRANSFERABLE TO THE BUILDING AT THE DATE OF COMPLETION AND ACCEPTANCE OF WORK.

CALIFORNIA GREEN BUILDING STANDARD

TESTING & ADJUSTING

THE TESTING AND ADJUSTING RESPONSIBILITIES FOR THE MECHANICAL CONTRACTOR ARE AS FOLLOWS:

1. THE HVAC SYSTEMS AND CONTROLS SHALL BE TESTED, ADJUSTED, AND BALANCED IN ACCORDANCE WITH ONE OF THE FOLLOWING STANDARDS:
   - TESTING AND BALANCING BUREAU'S (TABB) CONSTRUCTION SPECIFICATION INSTITUTE MASTER FORMAT (SECTION 23 05 90 AND SECTION 15990)
   - NATIONAL ENVIRONMENTAL BALANCING BUREAU'S (NEBB) STANDARDS FOR TESTING, ADJUSTMENT, AND BALANCING OF ENVIRONMENTAL SYSTEMS (7TH EDITION)
   - ASSOCIATED AIR BALANCE COUNCIL'S (AABC) NATIONAL STANDARDS FOR TOTAL SYSTEM BALANCING (6TH EDITION)
   - ASHRAE'S STANDARD 11-2008

FUNCTIONAL PERFORMANCE TESTING REPORT SCOPE AND CONTENT SHALL BE CONSISTENT WITH CALGREEN COMPLIANCE FORM "FUNCTIONAL PERFORMANCE TESTING" OR APPROVED EQUALS AND MAY INCORPORATE ACCEPTANCE FORMS REQUIRED UNDER THE CALIFORNIA BUILDING ENERGY EFFICIENCY STANDARDS.

CALIFORNIA GREEN BUILDING STANDARD

2. REPORT REQUIRED
A FINAL REPORT FOR THE TESTING AND ADJUSTING OF ALL NEW SYSTEMS SHALL BE COMPLETED AND PROVIDED TO THE CITY INSPECTOR PRIOR TO FINAL INSPECTION APPROVAL. THIS REPORT SHALL BE SIGNED BY THE INDIVIDUAL RESPONSIBLE FOR PERFORMING THESE SERVICES.

3. OPERATIONS AND SYSTEMS MANUAL
AN OPERATIONS AND SYSTEMS MANUAL SHALL BE PROVIDED TO THE FIELD INSPECTOR AT THE TIME OF FINAL INSPECTION.

ENVIRONMENTAL QUALITY

THE ENVIRONMENTAL RESPONSIBILITIES FOR THE M

CITY OF DANA POINT
PLANNING DIVISION

This plan has been reviewed for ZONING ONLY and meets the requirements of Title 9 of the Dana Point Municipal Code.

APPROVED KBN

DATE 10/21/24

COMMENTS BUILDING 12 (OC PERMIT PKG21-9516) PER CDP13-0018(I).

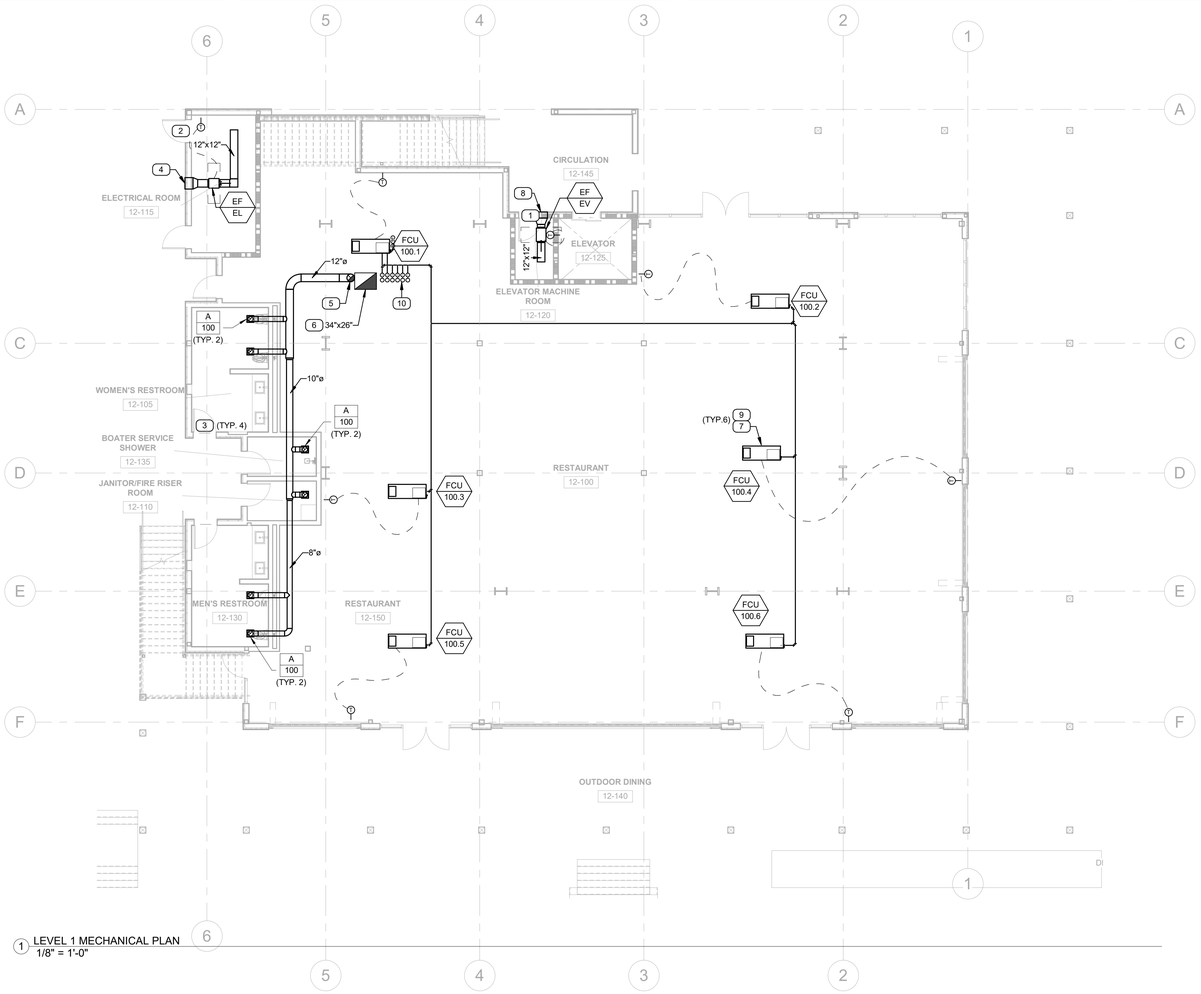

1 LEVEL 1 MECHANICAL PLAN
1/8" = 1'-0"

Zoning: CanningK 11/13/2024

Building&Safety: OCPWAzarvandB 12/22/2025

Permits: BNR21-0246, ELE21-0853, MEC21-0514, PLB21-0900

County of Orange - OC Public Works
OC Development Services
APPROVED

This set of plans and specifications must be kept on the job at all times. It is unlawful to make any changes or alterations to these plans without written permission from OC Public Works, OC Development Services of Orange County. The stamping of these plan specifications SHALL NOT be held to permit or be an approval of the violation of any provisions of any County Ordinance or State law.

Hind Tshetshaane
BUILDING OFFICIAL

GENERAL NOTES

1. TO REDUCE THE AMOUNT OF DUST, WATER, AND DEBRIS COLLECTED IN MECHANICAL EQUIPMENT AND DUCTS, ALL DUCT OPENINGS AND OTHER RELATED AIR DISTRIBUTION EQUIPMENT COMPONENT OPENINGS SHALL BE COVERED FROM THE TIME OF DELIVERY AT THE JOB SITE THROUGH OUT THE CONSTRUCTION UNTIL FINAL START UP.
2. OPEN FLAT ROOF AREA SHALL BE RESERVED FOR FUTURE TENANT EQUIPMENT.
3. DUCT WORK AND PIPING SHALL BE IDENTIFIED WITH A SERVICE MARKING WITH INDICATED AIRFLOW /WATER FLOW DIRECTION OF THE SERVICE.
4. DUCT SIZE INDICATED ARE THE "FREE-AREA" INSIDE DIMENSIONS OF THE DUCT.
5. RECTANGULAR CAN BE SUBSTITUTED WITH ROUND DUCTS AS LONG AS IT MEETS OR EXCEEDS THE CROSS-SECTIONAL FREE AREA AND IS ABLE TO FIT IN THE IDENTIFIED SPACE.
6. MAINTAIN 3'-0" DISTANCE FROM ENVIORNMENTAL EXHAUST OUTLETS (AS DEFINED IN CMC 502.2.1) TO BUILDING OPENINGS AND 10'-0" DISTANCE TO MECHANICALLY FORCED AIR INLETS.
7. LABEL TEMPERATURE SENSORS AS TO THE UNIT THEY ARE SERVING.
8. INSULATION MATERIALS APPLIED TO DUCTWORK SHALL HAVE FLAME SPREAD INDEX OF NOT MORE THAN 25 AND SMOKE DENSITY NOT EXCEEDING 50.
9. REQUIRED OFFSETS, COMPONENTS, ACCESSORIES, AND FITTINGS MAY NOT BE SHOWN BUT SHALL BE PROVIDED AS REQUIRED TO AVOID INTERFERENCES WITH UN-FORSEEN COMPONENTS.
10. PROVIDE DIELECTRIC UNIONS, GASKETS, AND FASTENERS AT DISSIMILAR METAL CONNECTIONS OF CONTACT POINTS.
11. ALL DUCT, RESPECTIVE PIPING, AND EQUIPMENT TO BE TIGHT TO UNDERSIDE OF THE STRUCTURE.
12. ALL RTUS WITH 2,000 CFM OR MORE AND COMBINED CFM OF MULTIPLE UNITS SUPPLYING AIR TO THE SAME SPACE OF 2,000 CFM OR MORE SHALL HAVE SMOKE DETECTORS IN THE MAIN SUPPLY DUCT WITHIN 5' OF THE UNIT. SMOKE DETECTORS FOR UNITS SERVING THE SAME TENANT SPACE SHALL BE INTERCONNECTED FOR GLOBAL SHUT DOWN (CMC 608.1).
13. ALL DUCT PENETRATIONS THROUGH RATED WALLS, FLOORS, AND CEILINGS SHALL HAVE SMOKE / FIRE DAMPERS.

PLAN NOTES "X"

1 PROVIDE 2 SF FREE AREA DOOR LOUVER, CENTERED IN BOTTOM OF DOOR.
2 PROVIDE 1 SF FREE AREA DOOR LOUVER, CENTERED IN BOTTOM OF DOOR.
3 PROVIDE 0.5 SF FREE AREA DOOR LOUVER, CENTERED IN BOTTOM OF DOOR.
4 PROVIDE 18"X18" EXHAUST AIR LOUVER, CENTERED ABOVE DOOR.
5 12" EXHAUST DUCT UP TO ROOF EXHAUST FAN EF-RR.
6 CAP 34"X26" OUTSIDE AIR DUCT AS HIGH AS POSSIBLE IN SPACE FOR FUTURE TENANT CONNECTION. PROTECT OPENING IN PLACE.
7 ROUTE REFRIGERANT LINES AS DIRECT AS POSSIBLE FROM FAN COIL UNIT TO CORRESPONDING AIR COOLED CONDENSING UNIT ON ROOF. LINES SHALL BE ROUTED IN AN INCONSPICUOUS MANNER WITHIN CONCEALED BUILDING SPACES.
8 PROVIDE 20"X20" EXHAUST AIR LOUVER.
9 SUSPEND FAN COIL UNIT FROM CEILING PER DETAILS ON DRAWING M3.1.2.
10 REFRIGERANT LINES UTR IN SHAFT. SEE M2.1.2 FOR CONTINUATION.

SMSARCHITECTS
100 Progress #250
Irvine, California 92618
949.757.3240 | www.sms-arch.com

CONSTANT
LINWOOD ENGINEERING INC
2301 dupont drive, suite 150
irvine, ca 92612 • 714.424.0001
www.linwoodengineering.com

DANA POINT HARBOR PARTNERS

PROJECT NAME
DANA POINT HARBOR COMMERCIAL CORE
BUILDING 12
1290 HARBOR WAY
DANA POINT, CA 92629

CLIENT
BWP PROPERTIES
BURNHAM|WARD

ADAM K. FRANKLIN
REGISTERED PROFESSIONAL ENGINEER
M34633
MECHANICAL
STATE OF CALIFORNIA
EXP. 12/31/23

No.	DATE	ISSUE
	06/01/2021	COUNTY SUBMITTAL
	09/24/2021	COUNTY RESUBMITTAL
	12/06/2022	50% DESIGN DEVELOPMENT
	02/10/2023	100% DESIGN DEVELOPMENT
	03/03/2023	50% CD PROGRESS SET
	04/21/2023	COUNTY RESUBMITTAL
A	07/24/2023	CITY RESUBMITTAL

DRAWINGS AND WRITTEN MATERIAL APPEARING HEREIN CONSTITUTE ORIGINAL AND UNPUBLISHED WORK OF SMS ARCHITECTS AND MAY NOT BE DUPLICATED, USED OR DISCLOSED WITHOUT WRITTEN CONSENT OF THE ARCHITECT

PROJECT NO 19019-12

DATE FEBRUARY 10, 2023

DRAWING TITLE
BLDG 12 - LEVEL 1 MECHANICAL PLAN

DRAWING NO.
M2.1.1

BIM 360://19274 Dana Point Harbor Revitalization_R21/19274 MEP Dana Point - Bldg 12 R21.rvt

7/28/2023 12:42:26 PM

CITY OF DANA POINT
PLANNING DIVISION

This plan has been reviewed for ZONING ONLY and meets the requirements of Title 9 of the Dana Point Municipal Code.

APPROVED KBN

DATE 10/21/24

COMMENTS BUILDING 12 (OC PERMIT PKG21-0516) PER CDP13-0018(I).

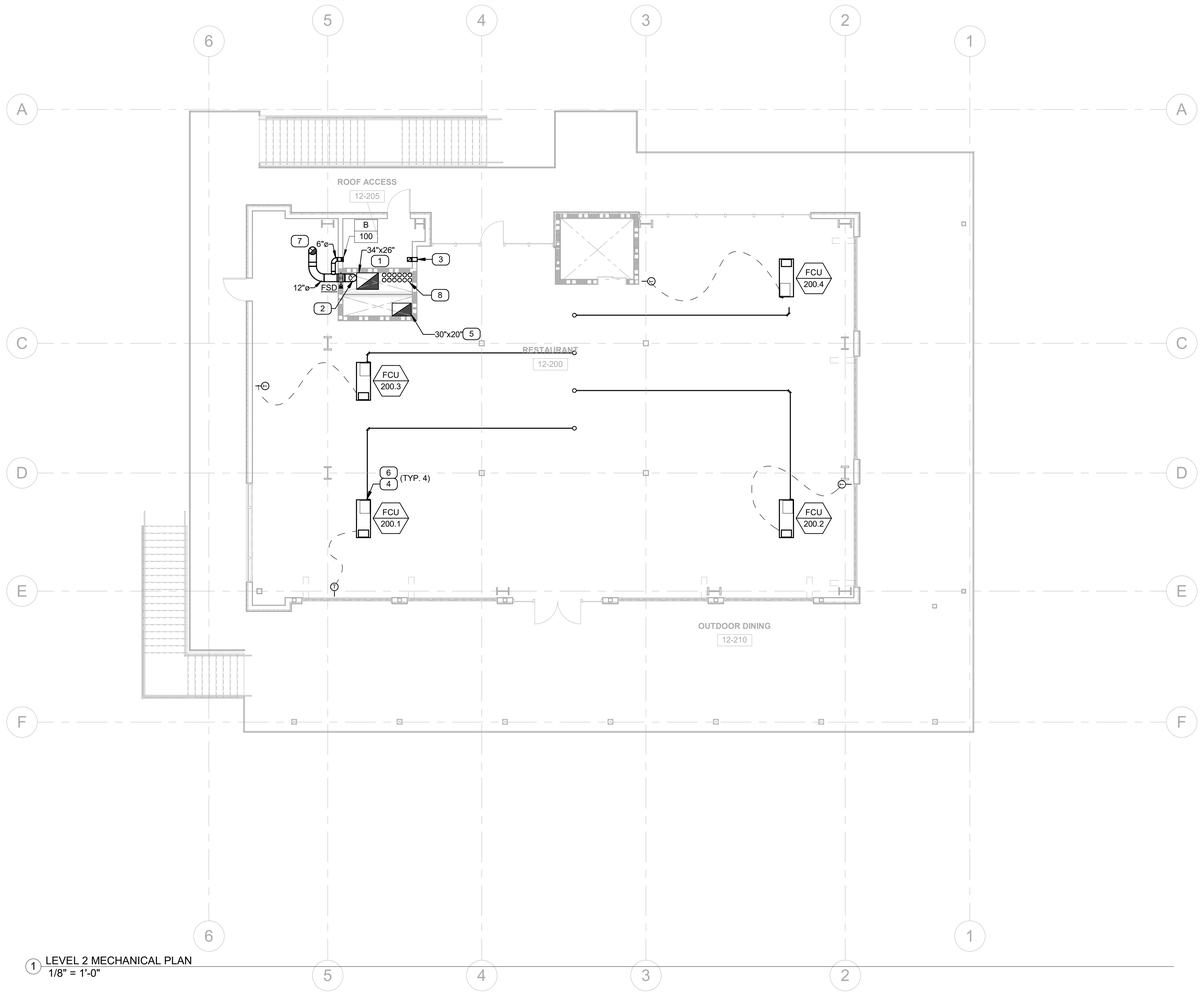

1 LEVEL 2 MECHANICAL PLAN
1/8" = 1'-0"

Zoning: CanningK 11/13/2024

Building&Safety: OCPWAzarvandB 12/22/2025

Permits: BNR21-0246, ELE21-0853, MEC21-0514, PLB21-0900

County of Orange - OC Public Works
OC Development Services
APPROVED

This set of plans and specifications must be kept on the job at all times. It is unlawful to make any changes or alterations to these plans without written permission from OC Public Works, OC Development Services of Orange County. The stamping of these plan specifications SHALL NOT be held to permit or be an approval of the violation of any provisions of any County Ordinance or State law.

Hani Tohetsbaev
BUILDING OFFICIAL

GENERAL NOTES

1. TO REDUCE THE AMOUNT OF DUST, WATER, AND DEBRIS COLLECTED IN MECHANICAL EQUIPMENT AND DUCTS, ALL DUCT OPENINGS AND OTHER RELATED AIR DISTRIBUTION EQUIPMENT COMPONENT OPENINGS SHALL BE COVERED FROM THE TIME OF DELIVERY AT THE JOB SITE THROUGH OUT THE CONSTRUCTION UNTIL FINAL START UP.
2. OPEN FLAT ROOF AREA SHALL BE RESERVED FOR FUTURE TENANT EQUIPMENT.
3. DUCT WORK AND PIPING SHALL BE IDENTIFIED WITH A SERVICE MARKING WITH INDICATED AIRFLOW /WATER FLOW DIRECTION OF THE SERVICE.
4. DUCT SIZE INDICATED ARE THE "FREE-AREA" INSIDE DIMENSIONS OF THE DUCT.
5. RECTANGULAR CAN BE SUBSTITUTED WITH ROUND DUCTS AS LONG AS IT MEETS OR EXCEEDS THE CROSS-SECTIONAL FREE AREA AND IS ABLE TO FIT IN THE IDENTIFIED SPACE.
6. MAINTAIN 3'-0" DISTANCE FROM ENVIORNMENTAL EXHAUST OUTLETS (AS DEFINED IN CMC 502.2.1) TO BUILDING OPENINGS AND 10'-0" DISTANCE TO MECHANICALLY FORCED AIR INLETS.
7. LABEL TEMPERATURE SENSORS AS TO THE UNIT THEY ARE SERVING.
8. INSULATION MATERIALS APPLIED TO DUCTWORK SHALL HAVE FLAME SPREAD INDEX OF NOT MORE THAN 25 AND SMOKE DENSITY NOT EXCEEDING 50.
9. REQUIRED OFFSETS, COMPONENTS, ACCESSORIES, AND FITTINGS MAY NOT BE SHOWN BUT SHALL BE PROVIDED AS REQUIRED TO AVOID INTERFERENCES WITH UN-FORSEEN COMPONENTS.
10. PROVIDE DIELECTRIC UNIONS, GASKETS, AND FASTENERS AT DISSIMILAR METAL CONNECTIONS OF CONTACT POINTS.
11. ALL DUCT, RESPECTIVE PIPING, AND EQUIPMENT TO BE TIGHT TO UNDERSIDE OF THE STRUCTURE.
12. ALL RTUS WITH 2,000 CFM OR MORE AND COMBINED CFM OF MULTIPLE UNITS SUPPLYING AIR TO THE SAME SPACE OF 2,000 CFM OR MORE SHALL HAVE SMOKE DETECTORS IN THE MAIN SUPPLY DUCT WITHIN 5' OF THE UNIT. SMOKE DETECTORS FOR UNITS SERVING THE SAME TENANT SPACE SHALL BE INTERCONNECTED FOR GLOBAL SHUT DOWN (CMC 608.1).
13. ALL DUCT PENETRATIONS THROUGH RATED WALLS, FLOORS, AND CEILINGS SHALL HAVE SMOKE / FIRE DAMPERS.

PLAN NOTES "X"

1 34"X26" OUTSIDE AIR DUCT RISER FROM FIRST FLOOR TO ROOF.
2 12"Ø EXHAUST DUCT DOWN TO FIRST FLOOR.
3 6"X6" TRANSFER AIR DUCT. SEE M3.1.2-4 FOR DETAIL.
4 ROUTE REFRIGERANT LINES AS DIRECT AS POSSIBLE FROM FAN COIL UNIT TO CORRESPONDING AIR COOLED CONDENSING UNIT ON ROOF. LINES SHALL BE ROUTED IN AN INCONSPICUOUS MANNER WITHIN CONCEALED BUILDING SPACES.
5 30"X20" UP TO ROOF. CAP OUTSIDE AIR AS HIGH AS POSSIBLE IN SPACE FOR FUTURE TENANT CONNECTION.
6 SUSPEND FAN COIL UNIT FROM CEILING PER DETAILS ON DRAWING M3.1.2.
7 EXHAUST DUCT UTR TO EF-RR
8 REFRIGERANT LINES UTR IN SHAFT. SEE M2.1.1 AND M2.1.3 FOR CONTINUATION.

SMSARCHITECTS
100 Progress #250
Irvine, California 92618
949.757.3240 | www.sms-arch.com

CONSTANT
LINWOOD ENGINEERING INC
2301 dupont drive, suite 150
irvine, ca 92612 • 714.424.0001
www.linwoodengineering.com

DANA POINT HARBOR PARTNERS

PROJECT NAME
DANA POINT HARBOR COMMERCIAL CORE
BUILDING 12
1290 HARBOR WAY
DANA POINT, CA 92629

CLIENT
BWP PROPERTIES
BURNHAM | WARD

REGISTERED PROFESSIONAL ENGINEER
ADAM K. FRANKLIN
M34633
MECHANICAL
STATE OF CALIFORNIA
EXP. 12/31/23

No.	DATE	ISSUE
	06/01/2021	COUNTY SUBMITTAL
	09/24/2021	COUNTY RESUBMITTAL
	12/06/2022	50% DESIGN DEVELOPMENT
	02/10/2023	100% DESIGN DEVELOPMENT
	03/03/2023	50% CD PROGRESS SET
	04/21/2023	COUNTY RESUBMITTAL
A	07/24/2023	CITY RESUBMITTAL

DRAWINGS AND WRITTEN MATERIAL APPEARING HEREIN CONSTITUTE ORIGINAL AND UNPUBLISHED WORK OF SMS ARCHITECTS AND MAY NOT BE DUPLICATED, USED OR DISCLOSED WITHOUT WRITTEN CONSENT OF THE ARCHITECT

PROJECT NO 19019-12

DATE FEBRUARY 10, 2023

DRAWING TITLE
BLDG 12 - LEVEL 2 MECHANICAL PLAN

DRAWING NO.
M2.1.2

BIM 360://19274 Dana Point Harbor Revitalization_R21/19274 MEP Dana Point - Bldg 12 R21.rvt

7/28/2023 12:42:27 PM

CITY OF DANA POINT
PLANNING DIVISION

This plan has been reviewed for ZONING ONLY and meets the requirements of Title 9 of the Dana Point Municipal Code.

APPROVED KBN

DATE 10/21/24

COMMENTS BUILDING 12 (OC PERMIT PKG21-0516) PER CDP13-0018(I).

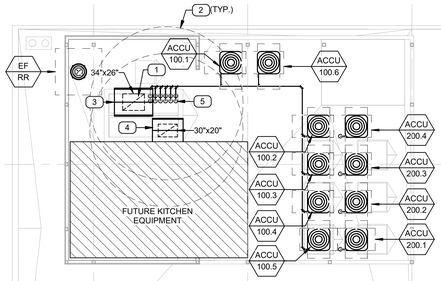

1 ROOF MECHANICAL PLAN
1/8" = 1'-0"

Zoning: CanningK 11/13/2024

Building&Safety: OCPWAzarvandB 12/22/2025

Permits: BNR21-0246, ELE21-0853, MEC21-0514, PLB21-0900

County of Orange - OC Public Works
OC Development Services
APPROVED

This set of plans and specifications must be kept on the job at all times. It is unlawful to make any changes or alterations to these plans without written permission from OC Public Works, OC Development Services of Orange County. The stamping of these plan specifications SHALL NOT be held to permit or be an approval of the violation of any provisions of any County Ordinance or State law.

Hind Tshetshaane
BUILDING OFFICIAL

GENERAL NOTES

1. TO REDUCE THE AMOUNT OF DUST, WATER, AND DEBRIS COLLECTED IN MECHANICAL EQUIPMENT AND DUCTS, ALL DUCT OPENINGS AND OTHER RELATED AIR DISTRIBUTION EQUIPMENT COMPONENT OPENINGS SHALL BE COVERED FROM THE TIME OF DELIVERY AT THE JOB SITE THROUGH OUT THE CONSTRUCTION UNTIL FINAL START UP.
2. OPEN FLAT ROOF AREA SHALL BE RESERVED FOR FUTURE TENANT EQUIPMENT.
3. DUCT WORK AND PIPING SHALL BE IDENTIFIED WITH A SERVICE MARKING WITH INDICATED AIRFLOW /WATER FLOW DIRECTION OF THE SERVICE.
4. DUCT SIZE INDICATED ARE THE "FREE-AREA" INSIDE DIMENSIONS OF THE DUCT.
5. RECTANGULAR CAN BE SUBSTITUTED WITH ROUND DUCTS AS LONG AS IT MEETS OR EXCEEDS THE CROSS-SECTIONAL FREE AREA AND IS ABLE TO FIT IN THE IDENTIFIED SPACE.
6. MAINTAIN 3'-0" DISTANCE FROM ENVIORNMENTAL EXHAUST OUTLETS (AS DEFINED IN CMC 502.2.1) TO BUILDING OPENINGS AND 10'-0" DISTANCE TO MECHANICALLY FORCED AIR INLETS.
7. LABEL TEMPERATURE SENSORS AS TO THE UNIT THEY ARE SERVING.
8. INSULATION MATERIALS APPLIED TO DUCTWORK SHALL HAVE FLAME SPREAD INDEX OF NOT MORE THAN 25 AND SMOKE DENSITY NOT EXCEEDING 50.
9. REQUIRED OFFSETS, COMPONENTS, ACCESSORIES, AND FITTINGS MAY NOT BE SHOWN BUT SHALL BE PROVIDED AS REQUIRED TO AVOID INTERFERENCES WITH UN-FORSEEN COMPONENTS.
10. PROVIDE DIELECTRIC UNIONS, GASKETS, AND FASTENERS AT DISSIMILAR METAL CONNECTIONS OF CONTACT POINTS.
11. ALL DUCT, RESPECTIVE PIPING, AND EQUIPMENT TO BE TIGHT TO UNDERSIDE OF THE STRUCTURE.
12. ALL RTUS WITH 2,000 CFM OR MORE AND COMBINED CFM OF MULTIPLE UNITS SUPPLYING AIR TO THE SAME SPACE OF 2,000 CFM OR MORE SHALL HAVE SMOKE DETECTORS IN THE MAIN SUPPLY DUCT WITHIN 5' OF THE UNIT. SMOKE DETECTORS FOR UNITS SERVING THE SAME TENANT SPACE SHALL BE INTERCONNECTED FOR GLOBAL SHUT DOWN (CMC 608.1).
13. ALL DUCT PENETRATIONS THROUGH RATED WALLS, FLOORS, AND CEILINGS SHALL HAVE SMOKE / FIRE DAMPERS.

PLAN NOTES "X"

1 OUTSIDE AIR DUCT TO TERMINATE WITH WEATHER PROOF CAP AT ROOF. AND DOWN THROUGH ROOF TO SERVE TENANT SPACES BELOW. SEE M2.1.1 AND M2.1.2.

2 MAINTAIN A MINIMUM CLEARANCE OF 10' FROM ECONOMIZER / OUTSIDE AIR INTAKE TO ANY APPLIANCE VENT OUTLET, VENT OPENING OF A PLUMBING DRAINAGE SYSTEM, OR DISCHARGE OUTLET OF AN EXHAUST FAN.

3 PROVIDE AND INSTALL GREENHECK FABRA HOOD MODEL FGI GRAVITY ROOF INTAKE WITH 20" X 34" THROAT AND WIRE MESH SCREEN. CURB CAP: 30.5" X 38.5", OVERALL DIMENSIONS: 32" X 40".

4 PROVIDE AND INSTALL GREENHECK FABRA HOOD MODEL FGI GRAVITY ROOF INTAKE WITH 20" X 30" THROAT AND WIRE MESH SCREEN. CURB CAP: 24.5" X 34.5", OVERALL DIMENSIONS: 26" X 36".

5 REFRIGERANT LINES DTR IN SHAFT. SEE ARCHITECTURAL FOR FLASHING. SEE M2.1.2 FOR CONTINUATION.

SMSARCHITECTS
100 Progress #250
Irvine, California 92618
949.757.3240 | www.sms-arch.com

CONSTANT
LINWOOD ENGINEERING INC
230 dupont drive, suite 150
irvine, ca 92602 • 714.424.0003
www.linwoodengineering.com

DANA POINT HARBOR PARTNERS

PROJECT NAME
DANA POINT HARBOR COMMERCIAL CORE
BUILDING 12
1290 HARBOR WAY
DANA POINT, CA 92629

CLIENT
BWP PROPERTIES
BURNHAM|WARD

REGISTERED PROFESSIONAL ENGINEER
ADAM K. FRANKLIN
M34633
MECHANICAL
STATE OF CALIFORNIA
EXP. 12/31/23

No.	DATE	ISSUE
	06/01/2021	COUNTY SUBMITTAL
	09/24/2021	COUNTY RESUBMITTAL
	12/06/2022	50% DESIGN DEVELOPMENT
	02/10/2023	100% DESIGN DEVELOPMENT
	03/03/2023	50% CD PROGRESS SET
	04/21/2023	COUNTY RESUBMITTAL
A	07/24/2023	CITY RESUBMITTAL

DRAWINGS AND WRITTEN MATERIAL APPEARING HEREIN CONSTITUTE ORIGINAL AND UNPUBLISHED WORK OF SMS ARCHITECTS AND MAY NOT BE DUPLICATED, USED OR DISCLOSED WITHOUT WRITTEN CONSENT OF THE ARCHITECT

PROJECT NO 19019-12

DATE FEBRUARY 10, 2023

DRAWING TITLE
BLDG 12 - ROOF MECHANICAL PLAN

DRAWING NO.
M2.1.3

BIM 360://19274 Dana Point Harbor Revitalization_R21/19274 MEP Dana Point - Bldg 12 R21.rvt

7/28/2023 12:42:27 PM

SPLIT SYSTEM UNIT SCHEDULE

GENERAL										INDOOR UNIT								OUTDOOR UNIT								PIPING LINE SIZE			NOTES
TAG	MANUFACTURER MODEL NO.	SERVICE	LOCATION	TOTAL COOLING LOAD (MBH)	TOTAL HEATING LOAD (MBH)	SEER/ [EER]	HSPF/ [COP]	AMBIENT SUMMER (°F) DB/WB	AMBIENT WINTER (°F) DB	OPERATING WEIGHT (LBS)	DIMENSIONS L" X W" X H"	TOTAL AIR QUANTITY (CFM)	OUTSIDE AIR QUANTITY (CFM)	ESP (IN. W.G.)	FILTER	VOLTS/ PHASE/ HERTZ	MCA (A)	MOCP (A)	OPERATING WEIGHT (LBS)	DIMENSIONS L" X W" X H"	PLATFORM HEIGHT (IN)	TOTAL DIMENSIONS (IN)	TOTAL ELEVATION ABOVE GROUND LEVEL (FT)	VOLTS/ PHASE/ HERTZ	FLA (A)	MCA (A)	MOCP (A)	LIQUID (IN)	GAS (IN)	REFRIG TYPE	
FC-100.1 - FC-100.6/ ACCU-100.1 - ACCU-100.6	CARRIER FJ4D-60L00 CARRIER 25SPA--003	1ST FLOOR	SUSPENDED/ ROOF	58.0	57.0	15.0	8.8	96/70	41	210	23 X 25 X 60	2000	500	0.5	MERV 13	208/1/60	7.6	15	300	38 X 38 X 39	8	38 X 38 X 47	35.5	208/1/60	1.2	34	-	3/8	7/8	R410A	1,2,3,4,5,6,7,8,9,10
FC-200.1 - FC-200.4/ ACCU-200.1 - ACCU-200.4	CARRIER FJ4D-60L00 CARRIER 25SPA--003	2ND FLOOR	SUSPENDED/ ROOF	58.0	57.0	15.0	8.8	96/70	41	210	23 X 25 X 60	2000	500	0.5	MERV 13	208/1/60	7.6	15	300	38 X 38 X 39	8	38 X 38 X 47	35.5	208/1/60	1.2	34	-	3/8	7/8	R410A	1,2,3,4,5,6,7,8,9,10

NOTES:
1. PROVIDE AUXULLARY (FIELD FABRICATED) DRIP PAN, BELOW COOLING COIL, WITH (2) 3/4" DRAIN CONNECTIONS.
2. ELECTRICAL CONTRACTOR SHALL FUNTISH AND INSTALL FUSED DISCONNECTS. PROVIDE DISCONNECT FOR BOTH INDOOR (NEMA-1) AND OURDOOR (NEMA-3R) UNITS.
3. PROVIDE EXTERNAL FILTER RACK FOR MERV FILTERS. FILTERS TO BE RATED AT MINIMUM MERV-13.
4. PIPE SIZES SHOWN IN EITHER THE PLAN OR SCHEDULE ARE FOR REFERENCE ONLY. ACTUAL INSTALLED PIPE ROUTE SHALL DICTATE REFRIGERANT PIPE SIZES.
5. SIZE REFRIGERANT PIPING IN ACCORDANCE WITH BOTH THE DETAILS SHOWN IN THE CONTRACT DOCUMENTS AND IN ACCORDANCE WITH THE MANUFACTURER'S RECOMMENDATIONS.
6. INSTALL EQUIPMENT IN ACCORDANCE WITH BOTH THE DETAILS SHOWN IN THE CONTRACT DOCUMENTS AND IN ACCORDANCE WITH THE MANUFACTURER'S RECOMMENDATIONS.
7. PROVIDE UNIT WITH 24-HOUR, 7-DAY PROGRAMMABLE ELECTRONIC SETBACK THERMOSTAT WITH ADJUSTABLE OVERRIDE FUNCTION. SHIPPED LOOSE FOR FUTURE INSTALLATION.
8. CONDENSING UNIT SHALL BE INSTALLED ON ROOF PAD WITH VIBRATION ISOLATORS. FAN COIL UNIT SHALL BE SUSPENDED WITHIN SPACE FROM STRUCTURE ABOVE WITH VIBRATION ISOLATORS.
9. PROVIDE CORROSION PROTECTION COIL COATING BY MODINE ON INDOOR AND OUTDOOR COILS.
10. SUSPEND FAN COIL UNIT FROM ROOF DECK ABOVE PER DETAILS ON M3.1.2.

EXHAUST FAN SCHEDULE

GENERAL					FAN					ELECTRICAL	CURB DIMENSIONS		NOTES
TAG	SERVICE	LOCATION	MANUFACTURER MODEL NO.	OPERATING WEIGHT (LBS)	CFM	ESP (IN WG)	RPM	HP	DRIVE TYPE	VOLTS/ PHASE/ HERTZ	ROOF CURB	ROOF OPENING	
EF-RR	RESTROOMS	ROOF	GREENHECK CUE-100-VG	70	600	0.25	1650	0.25	DIRECT	115/1/60	N/A	12" X 12"	1,2,3,4,6
EF-EL	ELECTRICAL ROOM	ELEC ROOM	GREENHECK SQ-95-VG	45	475	0.25	1725	0.17	DIRECT	115/1/60	N/A	N/A	1,2,5
EF-EV	ELEV. EQUIP. ROOM	ELEVATOR ROOM	GREENHECK SQ-98-VG	65	700	0.3	1900	0.28	DIRECT	115/1/60	N/A	N/A	1,2,5

NOTES:
1. FAN SHALL BE TESTED AND RATED, CERTIFIED, AND SEALED IN ACCORDANCE WITH AMCA FOR BOTH SOUND AND AIR PERFORMANCE. ALL FANS SHALL BE U.L. LISTED.
2. FAN SHALL BE PROBIDED WITH A NEMA-1 (INDOORS) OR NEMA-3R (OUTDOORS) DISCONNECT SWITCH, FACTORY MOUNTED AND WIRED.
3. PROVIDE GRAVITY BACKDRAFT DAMPER IN NECK OF EXHAUST DUCT BELOW ROOF DECK.
4. PROVIDE WITH PRE-FABRICATED SELF-FLASHING ROOF CURB.
5. INSTALL EXHAUST FAN TIGHT TO STRUCTURE, SUSPENDED 12" BELOW DECK ABOVE.
6. ANTI-CORROSION COATING OR ALL ALUMINUM CONSTRUCTION FOR SEACOAST PROTECTION.

AIR DISTRIBUTION SCHEDULE

TAG	MANUFACTURER MODEL NO.	CFM RANGE	NECK SIZE (IN)	FACE SIZE (IN)	FUNCTION	NOTES
A	PRICE 530	0-200	8 x 8	10 x 10	CEILING MOUNTED RETURN/EXHAUST GRILLE - 45° SINGLE DEFLECTION, 3/4" SPACING	1,2,3,4
B	PRICE 530	0-150	10 x 4	12 x 6	SIDEWALL RETURN/EXHAUST GRILLE - 45° SINGLE DEFLECTION, 3/4" SPACING	1,2,3,4

NOTES:
1. ALL PERFORMANCE DATA SHALL BE IN ACCORDANCE WITH ANSI/ASHRAE STANDARD 70-1991.
2. UNLESS OTHERWISE NOTED, ALL DIFFUSERS/REGISTERS/GRILLES SHALL HAVE NC RATINGS LESS THAN 25.
3. COLOR TO BE ENAMEL WHITE UNLESS OTHERWISE SPECIFIED BY ARCHITECT.
4. COORDINATE FRAME TYPE WITH ARCHITECTURAL DRAWINGS CEILING/WALL TYPE.

SEQUENCE OF OPERATIONS

FC/ACCU	Unit shall operate via a wall-mounted thermostat. Fan shall operate whenever cooling is engaged and be available 24/7 with cooling set point at 75°F (adj).
EF-RR	Fan shall operate continuously during occupied hours.
EF-EV	Fan shall be interlocked with line voltage thermostat in electrical room. Fan to operate when temperature in room exceeds 85°F.
EF-EL	Fan shall be interlocked with line voltage thermostat in electrical room. Fan to operate when temperature in room exceeds 85°F.

NOTES:
1. ELECTRICAL CONTRACTOR SHALL PROVIDE AND INSTALL RELAYS AS REQUIRED TO ACHIEVE CONTROL OF UNITS AS SPECIFIED.
2. UNLESS OTHERWISE NOTED, ALL BUILDING SYSTEMS AND COMPONENTS COVERED BY SECTIONS 110.0, 120.0 AND 140.0 SHALL BE INCLUDED IN THE SCOPE OF THE COMMISSIONING REQUIREMENTS IN SECTION 120.8 OF THE 2019 BUILDING ENERGY EFFICIENCY STANDARDS.

Zoning: CanningK 11/13/2024

Building&Safety: OCPWAzarvandB 12/22/2025

Permits: BNR21-0246, ELE21-0853, MEC21-0514, PLB21-0900

County of Orange - OC Public Works
OC Development Services
APPROVED
This set of plans and specifications must be kept on the job at all times. It is unlawful to make any changes or alterations to these plans without written permission from OC Public Works, OC Development Services of Orange County. The stamping of these plan specifications SHALL NOT be held to permit or be an approval of the violation of any provisions of any County Ordinance or State law.
Hind Tshetshaane
BUILDING OFFICIAL

CITY OF DANA POINT
PLANNING DIVISION
This plan has been reviewed for ZONING ONLY and meets the requirements of Title 9 of the Dana Point Municipal Code.
APPROVED KBN
DATE 10/21/24
COMMENTS BUILDING 12 (OC PERMIT PKG21-0516) PER CDP13-0018(I).

SMSARCHITECTS
100 Progress #250
Irvine, California 92618
949.757.3240 | www.sms-arch.com

CONSTANT
LINWOOD ENGINEERING INC
2301 dupont drive, suite 150
irvine, ca 92612 • 714.424.0001
www.linwoodengineering.com

DANA POINT HARBOR PARTNERS

PROJECT NAME
DANA POINT HARBOR COMMERCIAL CORE
BUILDING 12
1290 HARBOR WAY
DANA POINT, CA 92629

CLIENT
BURNHAM | WARD PROPERTIES
BWP

REGISTERED PROFESSIONAL ENGINEER
ADAM K. FRANKLIN
M34633
MECHANICAL
STATE OF CALIFORNIA
EXP. 12/31/23

No.	DATE	ISSUE
	06/01/2021	COUNTY SUBMITTAL
	09/24/2021	COUNTY RESUBMITTAL
	12/06/2022	50% DESIGN DEVELOPMENT
	02/10/2023	100% DESIGN DEVELOPMENT
	03/03/2023	50% CD PROGRESS SET
	04/21/2023	COUNTY RESUBMITTAL
A	07/24/2023	CITY RESUBMITTAL

DRAWINGS AND WRITTEN MATERIAL APPEARING HEREIN CONSTITUTE ORIGINAL AND UNPUBLISHED WORK OF SMS ARCHITECTS AND MAY NOT BE DUPLICATED, USED OR DISCLOSED WITHOUT WRITTEN CONSENT OF THE ARCHITECT

PROJECT NO 19019-12
DATE FEBRUARY 10, 2023
DRAWING TITLE
MECHANICAL SCHEDULES

DRAWING NO.
M3.1.1

CITY OF DANA POINT
PLANNING DIVISION

This plan has been reviewed for ZONING ONLY and meets the requirements of Title 9 of the Dana Point Municipal Code.

APPROVED KBN

DATE 10/21/24

COMMENTS BUILDING 12 (OC PERMIT PKG21-0516) PER CDP13-0018(I).

Zoning: CanningK **11/13/2024**

Building&Safety: OCPWAzarvandB **12/22/2025**

Permits: BNR21-0246, ELE21-0853, MEC21-0514, PLB21-0900

County of Orange - OC Public Works
OC Development Services
APPROVED

This set of plans and specifications must be kept on the job at all times. It is unlawful to make any changes or alterations to these plans without written permission from OC Public Works, OC Development Services of Orange County. The stamping of these plan specifications SHALL NOT be held to permit or be an approval of the violation of any provisions of any County Ordinance or State law.

Hind Tahtabaee
BUILDING OFFICIAL

SMSARCHITECTS
100 Progress #250
Irvine, California 92618
949.757.3240 | www.sms-arch.com

CONSTANT

LINWOOD ENGINEERING INC
230 dupont drive, suite 150
irvine, ca 92602 • 714.424.0003
www.linwoodengineering.com

DANA POINT HARBOR PARTNERS

PROJECT NAME
DANA POINT HARBOR COMMERCIAL CORE
BUILDING 12
1290 HARBOR WAY
DANA POINT, CA 92629

CLIENT
BWP PROPERTIES
BURNHAM|WARD

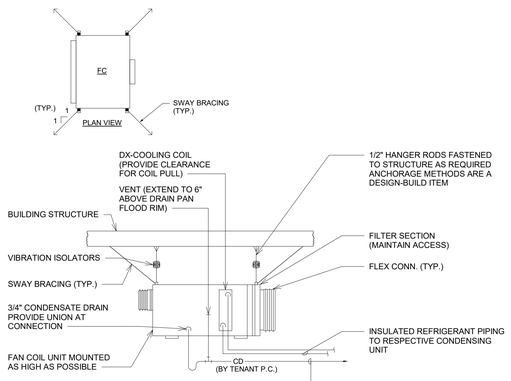

FCU INSTALLATION DETAIL (N.T.S.) 4

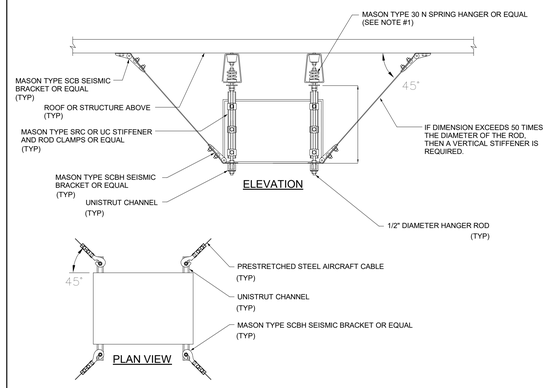

NOTES:

1. ANCHORAGE METHODS ARE A DESIGN BUILD ITEM.
2. PROVIDE SEISMIC BRACING AS REQUIRED BY THE CBC AND ASCE STANDARD 7-05.

SUSPENDED EQUIPMENT MOUNTING DETAIL (N.T.S.) 3

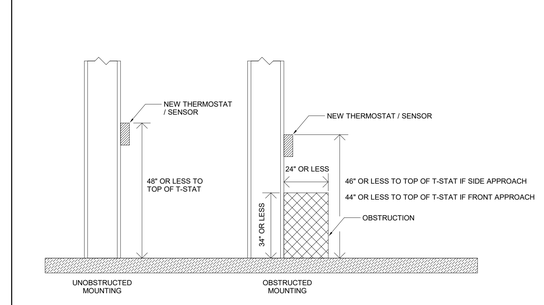

OPERABLE THERMOSTAT/SENSOR MOUNTING HEIGHTS (N.T.S.) 2

HANGER ROD SIZES & SUPPORT SPACING (PER CMC 313.3 & 313.6)				
PIPE TYPE	PIPE SIZE	HORIZONTAL PIPE SPACING	VERTICAL PIPE SPACING	ROD SIZE
COPPER	1/2" - 1-1/2"	6'	6'	3/8"
	2" - 6"	8'	8'	3/8"

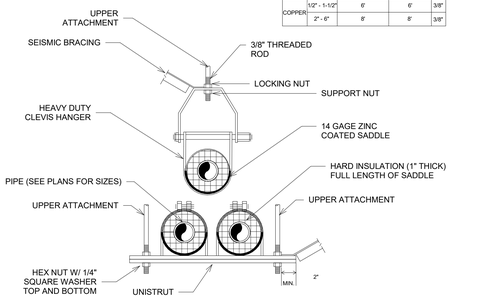

NOTES

1. SUPPORT ADJACENT TO JOINT, NOT TO EXCEED 18" FROM JOINT.
2. SUPPORT AT EACH HORIZONTAL BRANCH CONNECTION.
3. VERTICAL WATER LINES SHALL BE PERMITTED TO BE SUPPORTED IN ACCORDANCE WITH RECOGNIZED ENGINEERING PRINCIPLES WITH REGARD TO EXPANSION AND CONTRACTION. WHERE FIRST APPROVED BY THE AUTHORITY HAVING JURISDICTION.
4. HANGERS SHALL NOT BE PLACED ON THE COUPLING.

PIPE HANGER DETAIL 1

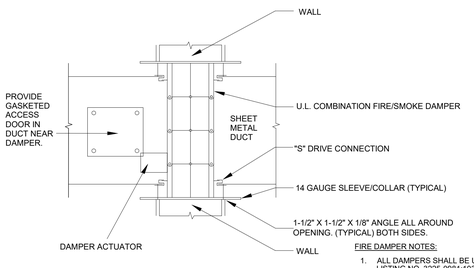

MOUNTING NOTE:

MOUNTING ANGLES SHOULD BE ATTACHED TO THE SLEEVE, NOT THE PARTITION. W/ #10 S.M. SCREWS, OR WELDS, OR" X 20 BOLTS @ 12" O.C. MAX. A MIN OF 2 CONN. PER SIDE, TOP & BOTTOM. MOUNTING ANGLES SHALL OVERLAP THE WALL A MIN OF 1". THE ATTACHMENT DEVICE SHOULD NOT INTERFERE WITH OPERATION OF THE DAMPERS AND MOVEMENT OF THE BLADES.

FIRE DAMPER NOTES:

1. ALL DAMPERS SHALL BE U.L. LABELED LISTING NO. 3225-0981:103 & 3230-0981: 104 AND CSFM LISTED. ALL FIRE DAMPERS SHALL BE INSTALLED PER STATE OF CALIFORNIA FIRE MARSHALL'S MATERIAL GREENHECK FSD-212 OR EQUAL.
2. DAMPER DETAIL FOR REFERENCE ONLY. DAMPERS SHALL BE STATE FIRE MARSHALL APPROVED AND INSTALLED STRICTLY PER MANUFACTURER'S PRINTED INSTRUCTIONS. MANUFACTURER'S INSTALLATION INSTRUCTIONS SHALL BE MADE AVAILABLE TO THE INSPECTING AUTHORITIES.
3. ELECTRICAL CONTRACTOR SHALL PROVIDE AND INSTALL AREA DETECTOR, RELAYS, AND WIRING TERMINATIONS. REFER TO ELECTRICAL PLANS FOR LOCATIONS.

COMBINATION FIRE/SMOKE DAMPER 8

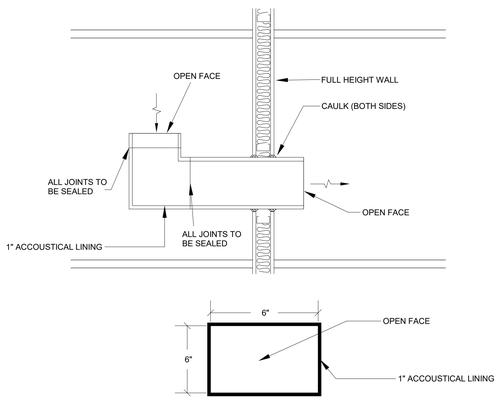

ROOFTOP EXHAUST FAN DETAIL (N.T.S.) 7

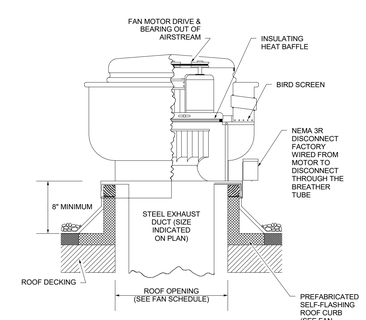

ROOFTOP EXHAUST FAN DETAIL (N.T.S.) 6

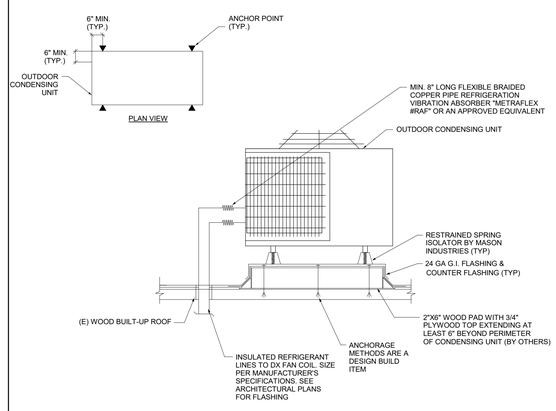

NOTE:
PROVIDE "METRAFLEX" MODEL RAF FLEXIBLE CONNECTORS AT ALL REFRIGERANT PIPING CONNECTIONS.

CONDENSING UNIT ROOF SUPPORT PAD (N.T.S.) 5

REGISTERED PROFESSIONAL ENGINEER
ADAM K. FRANKLIN
M34633
MECHANICAL
STATE OF CALIFORNIA
EXP. 12/31/23

No.	DATE	ISSUE
	06/01/2021	COUNTY SUBMITTAL
	09/24/2021	COUNTY RESUBMITTAL
	12/06/2022	50% DESIGN DEVELOPMENT
	02/10/2023	100% DESIGN DEVELOPMENT
	03/03/2023	50% CD PROGRESS SET
	04/21/2023	COUNTY RESUBMITTAL
A	07/24/2023	CITY RESUBMITTAL

DRAWINGS AND WRITTEN MATERIAL APPEARING HEREIN CONSTITUTE ORIGINAL AND UNPUBLISHED WORK OF SMS ARCHITECTS AND MAY NOT BE DUPLICATED, USED OR DISCLOSED WITHOUT WRITTEN CONSENT OF THE ARCHITECT

PROJECT NO. 19019-12

DATE FEBRUARY 10, 2023

DRAWING TITLE
MECHANICAL DETAILS

DRAWING NO.
M3.1.2

BIM 360://19274 Dana Point Harbor Revitalization_R21/19274 MEP Dana Point - Bldg 12-R21.rvt

7/28/2023 12:42:28 PM

Project Name:	Dana Point Harbor Building 12	NRCC-PRF-01-E	Page 3 of 11
Project Address:	34461 Dana Point Harbor Drive Dana Point 92629	Calculation Date/Time:	15:56, Wed, Jun 14, 2023
Input File Name:	DPHR Building 12 Mech & Env_EPro 8.cibd19x		

C3. ENERGY USE SUMMARY

Energy Component	Standard Design Site (MWh)	Proposed Design Site (MWh)	Margin (MWh)	Standard Design Site (MBtu)	Proposed Design Site (MBtu)	Margin (MBtu)
Space Heating	--	10.8	-10.8	119.2	--	119.2
Space Cooling	26.4	19.7	6.7	--	--	--
Indoor Fans	66.3	48.3	18.0	--	--	--
Heat Rejection	--	--	--	--	--	--
Pumps & Misc.	--	--	--	--	--	--
Domestic Hot Water	--	--	--	403.3	403.3	0.0
Indoor Lighting	22.8	22.8	0.0	--	--	-->
Compliance Total	**115.5**	**101.6**	**13.9**	**522.5**	**403.3**	**119.2**
Receptacle	24.3	24.3	0.0	--	--	--
Process	18.9	18.9	0.0	--	--	--
Other Ltg	--	--	--	--	--	--
Process Motors	--	--	--	--	--	--
TOTAL	**158.7**	**144.8**	**13.9**	**522.5**	**403.3**	**119.2**

D. EXCEPTIONAL CONDITIONS

This project includes partial performance compliance scope options. The building must show compliance with all other applicable compliance scope options (performance or prescriptively) before occupying.

The aged solar reflectance and aged thermal emittance must be listed in the Cool Roof Rating Council database of certified products. For projects where initial reflectance is used, the initial reflectance must be listed, and the aged reflectance is calculated by the software program and used in the compliance model.

The building does not include service water heating. Verify that service water heating is not required and is not included in the design.

This project uses the Simplified Geometry Performance Modeling Approach which is not capable of modeling daylighting controls and assumes the prescriptive Secondary Daylit Control requirements are met. PRESCRIPTIVE COMPLIANCE documentation (form NRCC-LTI-02-E) for the requirements of section 140.6(d) Automatic Daylighting Controls in Secondary Daylit Zones is required.

E. HERS VERIFICATION

This Section Does Not Apply

Project Name:	Dana Point Harbor Building 12	NRCC-PRF-01-E	Page 2 of 11
Project Address:	34461 Dana Point Harbor Drive Dana Point 92629	Calculation Date/Time:	15:56, Wed, Jun 14, 2023
Input File Name:	DPHR Building 12 Mech & Env_EPro 8.cibd19x		

C1. COMPLIANCE RESULTS FOR PERFORMANCE COMPONENTS (Annual TDV Energy Use, kBtu/ft ²-yr)

COMPLIES

Energy Component	Standard Design (TDV)	Proposed Design (TDV)	Compliance Margin (TDV)[1]
Space Heating	25.28	27.36	-2.08
Space Cooling	107.83	84.91	22.92
Indoor Fans	194.33	141.39	52.94
Heat Rejection	--	--	--
Pumps & Misc.	--	--	--
Domestic Hot Water	75.87	75.87	--
Indoor Lighting	69.85	69.85	--
ENERGY STANDARDS COMPLIANCE TOTAL	**473.16**	**399.38**	**73.78 (15.6%)**

[1] Notes: The number in parenthesis following the Compliance Margin in column 4. represents the Percent Better than Standard.

C2. RESULTS FOR 'ABOVE CODE' QUALIFICATIONS[1]

☐ This project is pursuing CalGreen Tier 1 ☐ This project is pursuing CalGreen Tier 2

Miscellaneous Energy Component	Standard Design (TDV)	Proposed Design (TDV)	Compliance Margin (TDV)[1]
Receptacle	74.19	74.19	--
Process	54.12	54.12	--
Other Ltg	--	--	--
Process Motors	--	--	--
COMPLIANCE TOTAL PLUS MISCELLANEOUS COMPONENTS	**601.47**	**527.69**	**73.8 (12.3%)**

[1] Notes: This table is used to document compliance with programs OTHER THAN Title 24 Part 6, if applicable.

Project Name:	Dana Point Harbor Building 12	NRCC-PRF-01-E	Page 1 of 11
Project Address:	34461 Dana Point Harbor Drive Dana Point 92629	Calculation Date/Time:	15:56, Wed, Jun 14, 2023
Input File Name:	DPHR Building 12 Mech & Env_EPro 8.cibd19x		

A. GENERAL INFORMATION

1	Project Location (city)	Dana Point	8	Standards Version	Compliance2019
2	CA Zip Code	92629	9	Compliance Software (version)	EnergyPro 8.3
3	Climate Zone	6	10	Weather File	TORRANCE_722955_CZ2010.epw
4	Total Conditioned Floor Area in Scope	9,600 ft²	11	Building Orientation (deg)	(N) 0 deg
5	Total Unconditioned Floor Area	0 ft²	12	Permitted Scope of Work	NewEnvelopeAndMechanical
6	Total # of Stories (Habitable Above Grade)	2	13	Building Type(s)	Nonresidential
7	Total # of dwelling units	0	14	Gas Type	NaturalGas

B. PROJECT SUMMARY

Table Instructions: Table B shows which building components are included in the performance calculation. If indicated as not included, the project must show compliance prescriptively if within permit application.

Building Components Complying via Performance				Building Components Complying Prescriptively	
Envelope (see Table G)	☒ Performance ☐ Not Included	Covered Process: Commercial Kitchens	☐ Performance ☒ Not Included	*The following building components are ONLY eligible for prescriptive compliance and should be documented on the NRCC form listed if within the scope of the permit application (i.e. compliance will not be shown on the NRCC-PRF-E).*	
Mechanical (see Table H)	☒ Performance ☐ Not Included	Covered Process: Computer Rooms	☐ Performance ☒ Not Included	Indoor Lighting (Unconditioned)§140.6 Outdoor Lighting §140.7	*NRCC-LTI-E* *NRCC-LTO-E*
Domestic Hot Water (see Table I)	☐ Performance ☒ Not Included	Covered Process: Laboratory Exhaust	☐ Performance ☒ Not Included	Sign Lighting §140.8 Mandatory Measures	*NRCC -LTS-E*
Lighting (Indoor Conditioned, see Table K)	☐ Performance ☒ Not Included			*Electrical power systems, commissioning, solar ready, elevator and escalator requirements are mandatory and should on the NRCC form listed if applicable (i.e. compliance will not be shown on the NRCC-PRF-E.)* Electrical Power Distribution S110.11	*NRCC-ELC-E*
Solar Thermal Water Heating (see Table I)	☐ Performance ☒ Not Included			Commissioning S120.8 Solar Ready S110.10	*NRCC-CXR-E* *NRCC-SRA-E*

Zoning: CanningK 11/13/2024

Building&Safety: OCPWAzarvandB 12/22/2025

Permits: BNR21-0246, ELE21-0853, MEC21-0514, PLB21-0900

County of Orange - OC Public Works
OC Development Services
APPROVED

This set of plans and specifications must be kept on the job at all times. It is unlawful to make any changes or alterations to these plans without written permission from OC Public Works, OC Development Services of Orange County. The stamping of these plan specifications SHALL NOT be held to permit or be an approval of the violation of any provisions of any County Ordinance or State law.

Hadi Tabatabaee
BUILDING OFFICIAL

CITY OF DANA POINT
PLANNING DIVISION

This plan has been reviewed for ZONING ONLY and meets the requirements of Title 9 of the Dana Point Municipal Code.

APPROVED KBN

DATE 10/21/24

COMMENTS BUILDING 12 (OC PERMIT PKG21-0516) PER CDP13-0018(I).

Project Name:	Dana Point Harbor Building 12	NRCC-PRF-01-E	Page 6 of 11
Project Address:	34461 Dana Point Harbor Drive Dana Point 92629	Calculation Date/Time:	15:56, Wed, Jun 14, 2023
Input File Name:	DPHR Building 12 Mech & Env_EPro 8.cibd19x		

H1. DRY SYSTEM EQUIPMENT (furnaces, air handling units, heat pumps, VRF, economizers etc.)

1	2	3	4	5	6	7	8	9	10	11	12
			Heating				Cooling				
Equipment Name	Equipment Type	Qty	Total Heating Output (kBtu/h)	Supp Heat Output (kBtuh)	Efficiency Unit	Efficiency	Total Cooling Output (kBtu/h)	Efficiency Unit	Efficiency	Economizer Type (if present)	Status[1]
Restaurant 12-201	SZHP (Split1Phase)	5	601	17	HSPF	8.800	56	SEER/EER	14.300/12.000	NoEconomizer	N
Restaurant 12-202	SZHP (Split1Phase)	1	601	17	HSPF	8.800	56	SEER/EER	14.300/12.000	NoEconomizer	N
Restaurant 12-100	SZHP (Split1Phase)	4	601	17	HSPF	8.800	56	SEER/EER	14.300/12.000	NoEconomizer	N

[1] Status: N - New, A – Altered, E – Existing

H2. FAN SYSTEMS SUMMARY

1	2	3	4	5	6	7	8	9	10	11	12	13	14
		Design OA	Supply Fan					Return Fan					
Name or Item Tag	Qty	CFM	CFM	Modeling Method	Power	Power Units	Control	CFM	Modeling Method	Power	Power Units	Control	Status[1]
Restaurant 12-201	5	288	2000	BrakeHorsePower	0.750	bhp	ConstantVolume	NA	NA	NA	NA	NA	N
Restaurant 12-202	1	360	2000	BrakeHorsePower	0.750	bhp	ConstantVolume	NA	NA	NA	NA	NA	N
Restaurant 12-100	4	750	2000	BrakeHorsePower	0.750	bhp	ConstantVolume	NA	NA	NA	NA	NA	N

[1] Status: N - New, A – Altered, E – Existing

H3. EXHAUST FAN SUMMARY

This Section Does Not Apply

H4. Wet System Equipment(boilers,chillers,cooling towers,etc.)

This Section Does Not Apply

H5. PUMPS

This Section Does Not Apply

Project Name:	Dana Point Harbor Building 12	NRCC-PRF-01-E	Page 5 of 11
Project Address:	34461 Dana Point Harbor Drive Dana Point 92629	Calculation Date/Time:	15:56, Wed, Jun 14, 2023
Input File Name:	DPHR Building 12 Mech & Env_EPro 8.cibd19x		

G3. OPAQUE SURFACE ASSEMBLY SUMMARY

1	2	3	4	5	6	7	8	9	10
Surface Name	Surface Type	Area (ft²)	Framing Type	Cavity R-Value	Continuous R-Value	Units	Value	Description of Assembly Layers	Status[1]
R-19 Wall Metal Stud (w/10	ExteriorWall	7303	Metal	19	10	U-Factor	0.060	Wood siding - 1/2 in. Vapor permeable felt - 1/8 in. Compliance Insulation R10.00 Gypsum Board - 1/2 in. Metal framed wall, 16in. OC, 5.5in., R-19 Gypsum Board - 1/2 in.	N
Slab On Grade37	UndergroundFloor	6000	NA	0	NA	F-Factor	0.73	Slab Type = UnheatedSlabOnGrade Insulation Orientation = None Insulation R-Value = R0	N

[1] Status: N - New, A – Altered, E – Existing

G5. FENESTRATION ASSEMBLY SUMMARY

1	2	3	4	5	6	7	8	9
Fenestration Assembly Name / Tag or I.D.	Fenestration Type / Product Type / Frame Type	Certification Method[1]	Assembly Method	Area ft²	Overall U-factor	Overall SHGC	Overall VT	Status[2]
Low E	VerticalFenestration CurtainWall N/A	NFRC Rated	Manufactured	2535	0.29	0.23	0.51	N
Low E Door	VerticalFenestration CurtainWall N/A	NFRC Rated	Manufactured	315	0.29	0.23	0.51	N

[1] Newly installed fenestration shall have a certified NFRC Label Certificate or use the CEC default tables found in Table 110.6-A and Table 110.6-B. Center of Glass (COG) values are for the glass-only, determined by the manufacturer, and are shown for ease of verification. Site-built fenestration values are calculated per Nonresidential Appendix NA6 and are used in the analysis.
[2] Status: N - New, A – Altered, E – Existing

Project Name:	Dana Point Harbor Building 12	NRCC-PRF-01-E	Page 4 of 11
Project Address:	34461 Dana Point Harbor Drive Dana Point 92629	Calculation Date/Time:	15:56, Wed, Jun 14, 2023
Input File Name:	DPHR Building 12 Mech & Env_EPro 8.cibd19x		

G1. ENVELOPE GENERAL INFORMATION (conditioned spaces only)

1	2	3	4
Opaque Surfaces & Orientation	Total Gross Surface Area (ft²)	Total Fenestration Area (ft²)	Window to Wall Ratio (%)
North-Facing[1]	1,150 ft²	455 ft²	39.6%
East-Facing[2]	1,815 ft²	785 ft²	43.3%
South-Facing[3]	2,788 ft²	1,275 ft²	45.7%
West-Facing[4]	1,550 ft²	335 ft²	21.6%
Total	**7,303 ft²**	**2,850 ft²**	**39.0%**
Roof	6,000 ft²	0 ft²	00.0%

Notes:
[1] North-Facing is oriented to within 45 degrees of true north, including 45°00'00" east of north (NE), but excluding 45°00'00" west of north (NW).
[2] East-Facing is oriented to within 45 degrees of true east, including 45°00'00" south of east (SE), but excluding 45°00'00" north of east (NE).
[3] South-Facing is oriented to within 45 degrees of true south, including 45°00'00" west of south (SW), but excluding 45°00'00" east of south (SE).
[4] West-Facing is oriented to within 45 degrees of true west, including 45°00'00" north of due west (NW), but excluding 45°00'00" south of west (SW).

G2. CRRC ROOFING PRODUCT SUMMARY

1	2	3	4	5
Assembly Name	Roof Pitch	Aged Solar Reflectance	Thermal Emittance	SRI
R-22 Insulation O/Metal D6	Low-Slope	0.63	0.75	Not Provided

G3. OPAQUE SURFACE ASSEMBLY SUMMARY

1	2	3	4	5	6	7	8	9	10
Surface Name	Surface Type	Area (ft²)	Framing Type	Cavity R-Value	Continuous R-Value	Units	Value	Description of Assembly Layers	Status[1]
R-22 Insulation O/Metal D6	Roof	6000	NA	22	NA	U-Factor	0.085	Metal Standing Seam - 1/16 in. Metal standing seam roof, R-22 Metal Standing Seam - 1/16 in.	N
Concrete O/Metal Deck8	InteriorFloor	3600	NA	0	NA	U-Factor	0.546	Concrete - 140 lb/ft3 - 4 in. Metal Standing Seam - 1/16 in.	N

Project Name:	Dana Point Harbor Building 12	NRCC-PRF-01-E	Page 9 of 11
Project Address:	34461 Dana Point Harbor Drive Dana Point 92629	Calculation Date/Time:	15:56, Wed, Jun 14, 2023
Input File Name:	DPHR Building 12 Mech & Env_EPro 8.cibd19x		

L. DECLARATION OF REQUIRED CERTIFICATES OF INSTALLATION

Table Instructions: Selections shall be made by Documentation Author to indicate which Certificates of Installation must be submitted for the features to be recognized for compliance. These documents bust be retained and provided to the building inspector during construction and can be found online at: https://www.energy.ca.gov/title24/2019standards/2019_compliance_documents/Nonresidential_Documents/NRCI/

Building Component	Form/Title
Envelope	NRCI-ENV-01-E - Must be submitted for all buildings
Mechanical	NRCI-MCH-01-E - Must be submitted for all buildings

Project Name:	Dana Point Harbor Building 12	NRCC-PRF-01-E	Page 8 of 11
Project Address:	34461 Dana Point Harbor Drive Dana Point 92629	Calculation Date/Time:	15:56, Wed, Jun 14, 2023
Input File Name:	DPHR Building 12 Mech & Env_EPro 8.cibd19x		

H9. ZONAL SYSTEM AND TERMINAL UNIT SUMMARY

1	2	3	4	5	6	7	8	9	10	11	12	13
				Rated Capacity (kBtuh)		Airflow (cfm)			Fan			
System ID	Zone Name	System Type	Qty	Heating	Cooling	Design	Min.	Min. Ratio	Power	Power Units	Cycles	VSD
2-Restaurant 12-202-Trm	2-Restaurant 12-202	Uncontrolled	1	NA	NA	2000	NA	0.00	0.750	bhp	NA	☐
3-Restaurant 12-100-Trm	3-Restaurant 12-100	Uncontrolled	4	NA	NA	8000	NA	0.00	0.750	bhp	NA	☐

H10. EVAPORATIVE COOLER SUMMARY

This Section Does Not Apply

H11. HEAT RECOVERY SUMMARY

This Section Does Not Apply

Project Name:	Dana Point Harbor Building 12	NRCC-PRF-01-E	Page 7 of 11
Project Address:	34461 Dana Point Harbor Drive Dana Point 92629	Calculation Date/Time:	15:56, Wed, Jun 14, 2023
Input File Name:	DPHR Building 12 Mech & Env_EPro 8.cibd19x		

H6. SYSTEM SPECIAL FEATURES

1	2	3	4
System Name	Equipment Type	Window Interlocks per §140.4(n)	Other Special Features and Controls
Restaurant 12-201	SZHP	NA	DDC Controls Optimum Start
Restaurant 12-202	SZHP	NA	DDC Controls Optimum Start
Restaurant 12-100	SZHP	NA	DDC Controls Optimum Start

Notes: This table includes controls related to the performance path only. For projects using the prescriptive path, mandatory and prescriptive controls requirements are documented on the NRCC-MCH-E.

H7. NONRESIDENTIAL VENTILATION

1	2	3	4	5	6	7
	Mechanical Ventilation					
Zone Name	Ventilation Function	# of people	Supply OA CFM	Exhaust CFM	Conditioned Area (sf)	DCV or Occupant Sensor Controls, or Both
1-Restaurant 12-201	Food Service - Restaurant dining rooms	96.00	1440	0	2880	NA
2-Restaurant 12-202	Food Service - Restaurant dining rooms	24.00	360	0	720	NA
3-Restaurant 12-100	Food Service - Restaurant dining rooms	200.01	3000	0	6000	NA

H8. HIGH-RISE RESIDENTIAL DWELLING UNIT AND HOTEL/MOTEL VENTILATION

This Section Does Not Apply

H9. ZONAL SYSTEM AND TERMINAL UNIT SUMMARY

1	2	3	4	5	6	7	8	9	10	11	12	13
				Rated Capacity (kBtuh)		Airflow (cfm)			Fan			
System ID	Zone Name	System Type	Qty	Heating	Cooling	Design	Min.	Min. Ratio	Power	Power Units	Cycles	VSD
1-Restaurant 12-201-Trm	1-Restaurant 12-201	Uncontrolled	5	NA	NA	10000	NA	0.00	0.750	bhp	NA	☐

SMSARCHITECTS
100 Progress #250
Irvine, California 92618
949.757.3240 | www.sms-arch.com

CONSTANT
LINWOOD ENGINEERING INC
2301 dupont drive, suite 150
irvine, ca 92612 • 714.424.0001
www.linwoodengineering.com

DANA POINT HARBOR PARTNERS

PROJECT NAME:
DANA POINT HARBOR COMMERCIAL CORE
BUILDING 12
1290 HARBOR WAY
DANA POINT, CA 92629

CLIENT
B|W|P BURNHAM|WARD PROPERTIES

REGISTERED PROFESSIONAL ENGINEER
ADAM K. FRANKLIN
M34633
MECHANICAL
STATE OF CALIFORNIA
EXP. 12/31/23

No.	DATE	ISSUE
	06/01/2021	COUNTY SUBMITTAL
	09/24/2021	COUNTY RESUBMITTAL
	12/06/2022	50% DESIGN DEVELOPMENT
	02/10/2023	100% DESIGN DEVELOPMENT
	03/03/2023	50% CD PROGRESS SET
	04/21/2023	COUNTY RESUBMITTAL
A	07/24/2023	CITY RESUBMITTAL

DRAWINGS AND WRITTEN MATERIAL APPEARING HEREIN CONSTITUTE ORIGINAL AND UNPUBLISHED WORK OF SMS ARCHITECTS AND MAY NOT BE DUPLICATED, USED OR DISCLOSED WITHOUT WRITTEN CONSENT OF THE ARCHITECT

PROJECT NO. 19019-12
DATE FEBRUARY 10, 2023
DRAWING TITLE
TITLE 24

DRAWING NO.
M4.1.1

7/28/2023 12:42:28 PM

BIM 360://19274 Dana Point Harbor Revitalization_R21/19274 MEP Dana Point - Bldg 12 R21.rvt

CITY OF DANA POINT
PLANNING DIVISION

This plan has been reviewed for ZONING ONLY and meets the requirements of Title 9 of the Dana Point Municipal Code.

APPROVED KBN

DATE 10/21/24

COMMENTS BUILDING 12 (OC PERMIT PKG21-0516) PER CDP13-0018(I).

Project Name:	Dana Point Harbor Building 12	NRCC-PRF-01-E	Page 11 of 11
Project Address:	34461 Dana Point Harbor Drive Dana Point 92629	Calculation Date/Time:	15:56, Wed, Jun 14, 2023
Input File Name:	DPHR Building 12 Mech & Env_EPro 8.cibd19x		

DOCUMENTATION AUTHOR'S DECLARATION STATEMENT

I certify that this Certificate of Compliance documentation is accurate and complete.

Documentation Author Name: Anders Evensen	Signature:
Company: Linwood Engineering, Inc.	
Address: 2301 Dupont Dr STE 150	Signature Date: 2023-06-14
City/State/Zip: Irvine CA 92612	CEA/ HERS Certification Identification (if applicable):
Phone: (949) 813-1376	

RESPONSIBLE PERSON'S DECLARATION STATEMENT

I certify the following under penalty of perjury, under the laws of the State of California:

1. The information provided on this Certificate of Compliance is true and correct.
2. I am eligible under Division 3 of the Business and Professions Code to accept responsibility for the building design or system design identified on this Certificate of Compliance (responsible designer)
3. The energy features and performance specifications, materials, components, and manufactured devices for the building design or system design identified on this Certificate of Compliance conform to the requirements of Title 24, Part 1 and Part 6 of the California Code of Regulations.
4. The building design features or system design features identified on this Certificate of Compliance are consistent with the information provided on other applicable compliance documents, worksheets, calculations, plans and specifications submitted to the enforcement agency for approval with this building permit application.
5. I will ensure that a completed signed copy of this Certificate of Compliance shall be made available with the building permit(s) issued for the building, and made available to the enforcement agency for all applicable inspections. I understand that a completed signed copy of this Certificate of Compliance is required to be included with the documentation the builder provides to the building owner at occupancy.

Responsible Envelope Designer Name:	Signature:	
Company: SMS Architects		
Address: 18004 Sky Park Cir #200,	Date Signed:	
City/State/Zip: Irvine CA 92614		
Phone: 949.757.3240	Title:	License #:
Responsible Lighting Designer Name:	Signature: NOT IN SCOPE	
Company:		
Address:	Date Signed:	
City/State/Zip:		
Phone:	Title:	License #:
Responsible Mechanical Designer Name: Adam Franklin	Signature:	
Company: Linwood Engineering, Inc.		
Address: 2301 Dupont Dr STE 150	Date Signed: 2023-06-13	
City/State/Zip: Irvine CA 92612		
Phone: (714) 424-0001	Title: Partner	License #: 34633

Project Name:	Dana Point Harbor Building 12	NRCC-PRF-01-E	Page 10 of 11
Project Address:	34461 Dana Point Harbor Drive Dana Point 92629	Calculation Date/Time:	15:56, Wed, Jun 14, 2023
Input File Name:	DPHR Building 12 Mech & Env_EPro 8.cibd19x		

M. DECLARATION OF REQUIRED CERTIFICATES OF ACCEPTANCE

Table Instructions: Selections shall be made by Documentation Author to indicate which Certificates of Acceptance must be submitted for the features to be recognized for compliance. These documents must be provided to the building inspector during construction and must be completed through an Acceptance Test Technician Certification Provider (ATTCP). For more information visit:https://www.energy.ca.gov/title24/2019standards/2019_compliance_documents/Nonresidential_Documents/NRCA/

Building Component	Form/Title
Envelope	NRCA-ENV-02-F - NRFC label verification for fenestration
Mechanical	NRCA-MCH-02-A Outdoor Air must be submitted for all newly installed HVAC units. Note: MCH02-A can be performed in conjunction with MCH-07-A Supply Fan VFD Acceptance (if applicable) since testing activities overlap
	NRCA-MCH-03-A Constant Volume Single Zone HVAC
	NRCA-MCH-11-A Automatic Demand Shed Controls
	NRCA-MCH-13-A Automatic FDD for Air Handling Units and Zone Terminal Units Acceptance

Zoning: CanningK **11/13/2024**

Building&Safety: OCPWAzarvandB **12/22/2025**

Permits: BNR21-0246, ELE21-0853, MEC21-0514, PLB21-0900

County of Orange - OC Public Works
OC Development Services
APPROVED

This set of plans and specifications must be kept on the job at all times. It is unlawful to make any changes or alterations to these plans without written permission from OC Public Works, OC Development Services of Orange County. The stamping of these plan specifications SHALL NOT be held to permit or be an approval of the violation of any provisions of any County Ordinance or State law.

Hind Tabatabaee
BUILDING OFFICIAL

SMSARCHITECTS
100 Progress #250
Irvine, California 92618
949.757.3240 | www.sms-arch.com

CONSTANT

LINWOOD ENGINEERING INC
2301 dupont drive, suite 150
irvine, ca 92612 • 714.424.0001
www.linwoodengineering.com

DANA POINT HARBOR PARTNERS

PROJECT NAME
DANA POINT HARBOR COMMERCIAL CORE
BUILDING 12
1290 HARBOR WAY
DANA POINT, CA 92629

CLIENT
BWP PROPERTIES
BURNHAM|WARD

No.	DATE	ISSUE
	06/01/2021	COUNTY SUBMITTAL
	09/24/2021	COUNTY RESUBMITTAL
	12/06/2022	50% DESIGN DEVELOPMENT
	02/10/2023	100% DESIGN DEVELOPMENT
	03/03/2023	50% CD PROGRESS SET
	04/21/2023	COUNTY RESUBMITTAL
A	07/24/2023	CITY RESUBMITTAL

DRAWINGS AND WRITTEN MATERIAL APPEARING HEREIN CONSTITUTE ORIGINAL AND UNPUBLISHED WORK OF SMS ARCHITECTS AND MAY NOT BE DUPLICATED, USED OR DISCLOSED WITHOUT WRITTEN CONSENT OF THE ARCHITECT

PROJECT NO 19019-12

DATE FEBRUARY 10, 2023

DRAWING TITLE
TITLE 24

DRAWING NO.
M4.1.2

BIM 360://19274 Dana Point Harbor Revitalization_R21/19274 MEP Dana Point - Bldg 12 R21.rvt

7/28/2023 12:42:29 PM

PLUMBING NOTES AND SPECIFICATIONS

1. GENERAL

A. CONTRACTOR SHALL PERFORM ALL WORK SO AS TO CONFORM TO LOCAL, STATE AND NATIONAL CODES, AND THE REQUIREMENTS OF LOCAL AUTHORITIES HAVING JURISDICTION.

B. CONTRACTOR SHALL VISIT THE SITE PRIOR TO BIDDING TO VERIFY LOCATION, ELEVATIONS AND SIZES OF ALL EXISTING PLUMBING AND INFORM THE ARCHITECT OF ANY DISCREPANCIES.

C. FOR EXACT SPECIFICATIONS, MOUNTING HEIGHTS, COLORS, AND LOCATIONS OF ALL PLUMBING FIXTURES, REFER TO ARCHITECTURAL DRAWINGS.

D. ACCURATE AS-BUILT DRAWINGS SHALL BE MADE DURING CONSTRUCTION AND SUBMITTED FOR APPROVAL UPON COMPLETION OF INSTALLATION.

E. THE CONTRACTOR SHALL FURNISH ALL MATERIALS, LABOR, EQUIPMENT, TRANSPORTATION, AND SERVICES NECESSARY FOR THE COMPLETION OF THE WORK.

F. THESE DRAWINGS SHOW THE GENERAL SCHEME OF INSTALLATION AND ARE DIAGRAMMATIC IN SCOPE. THE CONTRACTOR SHALL BE RESPONSIBLE FOR COORDINATING HIS WORK WITH ARCHITECT AND ALL OTHER TRADES. THIS INCLUDES COORDINATING THE LOCATION, SIZE AND ELEVATION OF ALL OPENINGS.

G. CONTRACTOR SHALL BE RESPONSIBLE FOR TESTING AND START-UP OF THE SYSTEM. CONTRACTOR SHALL FILE, SECURE AND PAY FOR ALL NECESSARY APPROVALS, PERMITS AND INSPECTIONS. ALL WORK SHALL BE GUARANTEED TO BE FREE FROM DEFECT FOR ONE YEAR AFTER ACCEPTANCE OF THE INSTALLATION BY OWNER. ALL WORK SHALL BE IN ACCORDANCE WITH THE CALIFORNIA CODE OF REGULATIONS, TITLE 24, PART 5, 2019 CALIFORNIA PLUMBING CODE.

H. THE PLUMBING SYSTEM SHALL BE TESTED IN ACCORDANCE WITH THE CALIFORNIA CODE OF REGULATIONS, TITLE 24, PART 5, 2019 CALIFORNIA PLUMBING CODE. CONTRACTOR TO COORDINATE TESTS WITH LOCAL OFFICIALS.

I. DETAILS OF CONSTRUCTION AND OF WORKMANSHIP WHERE NOT SPECIFICALLY DESCRIBED HEREIN OR INDICATED ON THE DRAWINGS SHALL BE SUBJECT TO THE ENGINEER'S APPROVAL. IT IS THE INTENT OF THESE SPECIFICATIONS TO PROVIDE COMPLETE SYSTEMS, LEFT IN GOOD WORKING ORDER, READY FOR OPERATION.

2. SCOPE OF WORK

THE CONTRACTOR SHALL BE RESPONSIBLE FOR THE FURNISHING AND INSTALLATION OF ALL FIXTURES, MATERIALS, PIPING, AND COMPONENTS AS REQUIRED FOR A COMPLETE AND OPERATIONALLY FUNCTIONAL SYSTEM. SCOPE OF WORK SHALL INCLUDE BUT NOT BE LIMITED TO:

A. INSTALLATION OF ABOVE GROUND SANITARY DRAIN WASTE AND VENT PIPING.

B. INSTALLATION OF CLEANOUTS IN SANITARY DRAINAGE SYSTEMS.

C. INSTALLATION OF DOMESTIC HOT AND COLD WATER PIPING INCLUDING ANTI-WATER HAMMER SHOCK ABSORBERS, VALVES, STOP VALVES, FLEX-SUPPLIES, DIELECTRIC UNIONS BETWEEN DISSIMILAR PIPING MATERIALS, ETC.

D. INSTALLATION OF FIXTURES INCLUDING WALL HANGERS, SUPPORTS, STOP VALVES, FLEX- SUPPLIES, DRAINS, TRAPS, STRAINERS, FAUCETS, SOAP DISPENSERS, ESCUTCHEONS, SEATS, AND OTHER DEVICES AS SHOWN ON THE DRAWINGS AND INDICATED IN THE SCHEDULE OF PLUMBING FIXTURES.

E. TESTING OF THE PLUMBING SYSTEM INCLUDING AIR OR WATER TEST OF DRAINAGE SYSTEM ROUGHINGS, SMOKE TEST OF FINISHED DRAINAGE SYSTEM AND PRESSURE TEST OF DOMESTIC WATER SYSTEMS.

F. DISINFECTION OF THE DOMESTIC WATER SUPPLY SYSTEM.

G. INSTALLATION OF FIBERGLASS INSULATION, FITTING COVERS, AND JACKETS ON ALL HOT AND COLD DOMESTIC WATER PIPING.

H. DESIGN, FURNISHING, AND INSTALLATION OF SEISMIC BRACING.

I. CUTTING AND PATCHING AS REQUIRED.

J. PERMITS, INSPECTIONS, APPROVALS, AND CERTIFICATES, INCLUDING FEES.

K. 1 YEAR FULL GUARANTEE OF ALL WORKMANSHIP.

3. SANITARY DRAINAGE

A. PIPING ARRANGED IN GROUPS OF TWO OR MORE LINES, WHICH PENETRATE TWO OR MORE FLOORS, SHALL BE ENCLOSED IN SHAFT HAVING A FIRE RESISTANCE RATING IN ACCORDANCE WITH THE CALIFORNIA CODE OF REGULATIONS, TITLE 24, PART 2, 2019 CALIFORNIA BUILDING CODE.

B. CLEANOUTS FOR SANITARY DRAINAGE SYSTEMS SHALL BE LOCATED IN ACCORDANCE WITH THE CALIFORNIA CODE OF REGULATIONS, TITLE 24, PART 5, 2019 CALIFORNIA PLUMBING CODE.

C. ALL VENT PENETRATIONS THROUGH BUILDING ROOF SHALL BE MADE WATER-TIGHT BY THE USE OF PROPER FLASHING MATERIALS. SUBMIT FLASHING DETAILS FOR APPROVAL BY THE ARCHITECT.

D. VENTS SHALL TERMINATE NOT LESS THAN 6" ABOVE ROOF. VENTS SHALL NOT TERMINATE BELOW OR WITHIN 10' HORIZONTALLY OF ANY DOOR, WINDOW, FRESH AIR INTAKE OF OTHER VENTILATION OPENING. WHERE 10' HORIZONTAL CLEARANCE CANNOT BE MAINTAINED, EXTEND VENT TO AT LEAST 3' ABOVE VENTILATION OPENINGS.

4. DOMESTIC WATER

A. ALL POTABLE WATER PIPING SHALL BE DISINFECTED AS PER AWWA STANDARD C601-54 AND AS REQUIRED BY THE LOCAL BUILDING AND HEALTH DEPARTMENT CODES.

B. ANTI WATER-HAMMER SHOCK ABSORBERS SHALL BE WATTS SERIES 15 SIZED IN ACCORDANCE WITH THE MANUFACTURERS RECOMMENDATIONS.

C. PROVIDE STOP VALVES FOR ALL DOMESTIC WATER CONNECTIONS TO FIXTURES EXCEPT WHERE GATE VALVES ARE INDICATED ON THE DRAWINGS OR FAUCET IS PROVIDED WITH INTEGRAL STOPS.

D. PROVIDE CHROME PLATED, BRASS ANGLED STOP VALVES FOR ALL FIXTURES NOT HAVING INTEGRAL STOPS.

E. ALL PIPE, FITTINGS, FIXTURES, ETC. THAT CONTACT POTABLE WATER FOR HUMAN CONSUMPTION SHALL SHOW APPROVAL TO NSF 61, ANNEX G. REFERENCE SECTION 604.2, CALIFORNIA PLUMBING CODE, 2019 EDITION, AND HEALTH AND SAFETY CODE SECTION 116875.

5. CONDENSATE DRAINS

A. PIPING FOR PRIMARY AND SECONDARY CONDENSATE DRAINAGE SHALL BE HARD DRAWN COPPER TUBE, MINIMUM DWV WEIGHT.

B. FITTINGS FOR CONDENSATE DRAINAGE PIPING SHALL BE WROUGHT COPPER WITH 95/5% ANTIMONY/TIN SWEAT JOINTS.

C. TRAP SEAL DEPTH FOR AIR CONDITIONING CONDENSATE DRAINS SHALL NOT BE LESS THAN:

AC UNIT STATIC PRESSURE	MINIMUM TRAP SEAL DEPTH
LESS THAN 1" W.C.	3"
1" TO 2" W.C. 4"	
MORE THAN 2" W.C.	6"

6. NATURAL GAS

A. ALL BRANCH CONNECTIONS SHALL BE MADE ON THE TOP OR SIDE OF HORIZONTAL LINES.

B. GAS PIPING SHALL NOT BE RUN IN OR THROUGH SUPPLY AIR DUCTS, CLOTHES CHUTES, CHIMNEYS, VENTS, OR DUMBWAITERS.

C. VALVES, UNIONS OR RUNNING THREAD SHALL NOT BE LOCATED IN ANY AIR PLENUM.

D. PORTIONS OF GAS PIPING SYSTEMS INSTALLED IN CONCEALED LOCATIONS SHALL NOT HAVE UNIONS, TUBING FITTINGS, OR RUNNING THREADS.

E. HANGERS AND SUPPORTS SHALL BE OF MATERIAL OF SUFFICIENT STRENGTH TO SUPPORT THE LOADS IMPOSED. HANGERS AND STRAPPING MATERIAL SHALL BE OF SIMILAR MATERIALS AS THE PIPING TO AVOID GALVANIC ACTION.

F. INTERVAL OF SUPPORT: GAS PIPING SHALL BE SUPPORTED AT DISTANCES NOT EXCEEDING THE SPACING SPECIFIED IN TITLE 24, PART 5, 2019 CALIFORNIA PLUMBING CODE.

G. PROVIDE INDIVIDUAL VALVE FOR EACH GAS OUTLET. THE VALVE SHALL BE ACCESSIBLE AND ADJACENT TO THE APPLIANCE.

H. PROVIDE A UNION BETWEEN EACH APPLIANCE AND THE APPLIANCE GAS VALVE.

I. GAS OUTLETS WHICH DO NOT CONNECT TO APPLIANCES SHALL BE CAPPED GAS-TIGHT.

J. PROVIDE A DRIP LEG AHEAD OF EACH APPLIANCE SHUTOFF VALVE.

K. PORTIONS OF THE GAS PIPING SYSTEM INSTALLED IN CONCEALED LOCATIONS SHALL BE TESTED BEFORE THE PIPING IS COMPLETELY CONCEALED.

L. THE GAS PIPING SYSTEM SHALL BE TESTED WITH AIR OR AN INERT GAS. THE SYSTEM SHALL BE TESTED TO A PRESSURE OF 1 1/2 TIMES THE SYSTEM WORKING PRESSURE, BUT NOT LESS THAN 10 PSI. GAS PIPING SYSTEMS SHALL MAINTAIN THE FULL-TEST PRESSURE FOR A PERIOD OF 10 MINUTES.

M. THE GAS PIPING SYSTEM SHALL BE PURGED TO A SAFE LOCATION. PIPING SHALL NOT BE PURGED INTO THE COMBUSTION CHAMBER OF AN APPLIANCE.

7. HANGERS AND SUPPORTS

A. MAXIMUM SPACING OF SUPPORTS FOR VERTICAL PIPING SHALL NOT EXCEED:

TYPE OF PIPING	MAXIMUM SPACING
HUBLESS CAST IRON SOIL LINES	AT BASE AND EACH FLOOR NOT EXCEED 15'
THREADED STEEL PIPE	AT EVERY OTHER FLOOR NOT TO EXCEED 25'
COPPER TUBE	AT EVERY FLOOR NOT TO EXCEED 10'
SCHEDULE 40 PVC	AT EVERY FLOOR PLUS MID-FLOOR GUIDES

PROVIDE RISER CLAMPS, WALL BRACKET HANGER, ETC. AS REQUIRED.

B. MAXIMUM SPACING OF SUPPORTS FOR HORIZONTAL PIPING SHALL NOT EXCEED:

TYPE OF PIPING	MAXIMUM SPACING
HUBLESS CAST IRON SOIL PIPE	AT EVERY OTHER JOINT(EVERY JOINT WHERE OVER 4')
THREADED STEEL PIPE (3/4" LESS)	AT 10'-0" INTERVALS
THREADED STEEL PIPE (1" & LARGER)	AT 12'-0" INTERVALS
COPPER TUBE (1 1/2" & LESS)	AT 6'-0" INTERVALS
COPPER TUBE (2" & LARGER)	AT 10'-0" INTERVALS
SCHEDULE 40 PVC	AT 4'-0" INTERVALS

C. ALL RISERS SHALL BE SUPPORTED AT THE BASE.
D. PROVIDE CAPABILITY FOR EXPANSION AND CONTRACTION IN ALL PIPING AS INDICATED BELOW:

TYPE OF PIPING	TYPE OF PROVISIONS
DRAIN LINES IN UNHEATED AREAS	EXPANSION FITTING @ 125'
DOMESTIC HOT WATER LINES	EXPANSION LOOP @ 100'

E. FOR ALL PIPING 2 1/2" AND LARGER WITH HANGERS 12" OR LONGER, PROVIDE SEISMIC RESTRAINT SWAY BRACING AS FOLLOWS:
- LONGITUDINAL SWAY BRACING SHALL BE PROVIDED AT INTERVALS NOT EXCEEDING 80'-0"
- LATERAL SWAY BRACING SHALL BE PROVIDED AT INTERVALS NOT EXCEEDING 40'-0"

8. INSULATION

A. THE FOLLOWING PIPING SHALL BE INSULATED:
- DOMESTIC HOT WATER
- CONDENSATE DRAINS

B. INSULATION SHALL BE SIZED BASED ON WHICHEVER IS MORE STRINGENT PER CPC 609.11.2 AND SECTION 120.3 OF THE CALIFORNIA ENERGY CODE. PROVIDE JACKETS AS SPECIFIED BELOW.

C. JACKETS FOR GENERAL PURPOSE, INDOOR USE SHALL BE MANVILLE "ZESTON 2000" PVC WITH "PERMA-WELD" ADHESIVE OR APPROVED EQUAL.

D. JACKETS FOR OUTDOOR USE SHALL BE MANVILLE "ZESTON 2000" PVC WITH "PERMA-WELD" ADHESIVE OR APPROVED EQUAL.

E. VALVES, FLANGES, ELBOWS, TEES, HUBS AND OTHER FITTINGS SHALL BE INSULATED USING MANVILLE "HI-LO TEMP" FIBERGLASS INSERTS WITH MANVILLE "ZESTON 2000" PVC FITTING COVERS SECURED WITH MANVILLE "PERMA-WELD" ADHESIVE.

F. ALL INSULATION SYSTEMS, INCLUDING INSULATION, ADHESIVES AND JACKETS SHALL BE CERTIFIED IN ACCORDANCE WITH ASTM#E84 FOR FLAMESPREAD RATING OF 25 OR LESS AND SMOKE DEVELOPED RATING OF 50 OR LESS.

G. ALL BUT JOINTS OF INSULATION SECTIONS SHALL BE SEALED USING BUTT STRIPS AS RECOMMENDED BY THE MANUFACTURER FOR THE JACKET EMPLOYED.

9. TESTING AND DISINFECTION

A. ALL NEW PLUMBING SYSTEMS SHALL BE TESTED IN ACCORDANCE WITH THE CALIFORNIA CODE OF REGULATIONS, TITLE 24, PART 5, 2019 CALIFORNIA PLUMBING CODE.

B. PER 2019 CALIFORNIA PLUMBING CODE, BUILDING SEWERS SHALL BE TESTED BY PLUGGING THE END OF THE BUILDING SEWER AT ITS POINTS OF CONNECTION WITH THE PUBLIC SEWER OR PRIVATE SEWAGE DISPOSAL SYSTEM AND COMPLETELY FILLING THE BUILDING SEWER WITH WATER FROM THE LOWEST TO THE HIGHEST POINT THEREOF, OR BY APPROVED EQUIVALENT LOW-PRESSURE TEST. PLASTIC DWV PIPING SYSTEMS SHALL NOT BE TESTED BY THE AIR METHOD. THE BUILDING SEWER SHALL BE WATERTIGHT.

C. DOMESTIC WATER SYSTEMS SHALL BE HYDROSTATIC TESTED AT 150 PSI FOR NOT LESS THAN ONE HOUR.

D. ALL NEW DOMESTIC WATER SYSTEMS SHALL BE DISINFECTED USING A WATER CHLORINE SOLUTION AND IN ACCORDANCE WITH THE REQUIREMENTS OF THE CALIFORNIA CODE OF REGULATIONS, TITLE 24, PART 5, 2019 CALIFORNIA PLUMBING CODE.

CITY OF DANA POINT
PLANNING DIVISION
This plan has been reviewed for ZONING ONLY and meets the requirements of Title 9 of the Dana Point Municipal Code.
APPROVED KBN
DATE 10/21/24
COMMENTS BUILDING 12 (OC PERMIT PKG21-0516) PER CDP13-0018(I).

PLUMBING LEGEND

PIPING

SYMBOL	DESCRIPTION
	PIPE TURNING DOWN
	PIPE TURNING UP
	CONDENSATE PIPING
	DOMESTIC COLD WATER
	DOMESTIC HOT WATER SUPPLY (120F)
	DOMESTIC HOT WATER RETURN (120F)
	GREASE WASTE
	VENT PIPING
	UNDERGROUND SANITARY
	ABOVE GROUND SANITARY
	UNDERGROUND GAS
	ABOVE GROUND GAS
	UNDERGROUND STORM

MISCELLANEOUS

SYMBOL	DESCRIPTION
	EQUIPMENT
	EXISTING TO REMAIN
	EXISTING TO BE REMOVED
(REL)	EXISTING TO BE RELOCATED
#	SHEET NOTE TAG
	POINT OF CONNECTION
	PUMP

ABBREVIATIONS

SYMBOL	DESCRIPTION
ADA	AMERICANS WITH DISABILITIES ACT
AFF	ABOVE FINISHED FLOOR
AFG	ABOVE FINISHED GRADE
BAS	BUILDING AUTOMATION SYSTEM
BTU	BRITISH THERMAL UNITS
BV	BALL VALVE
CAI	COMBUSTION AIR INTAKE
CD	CONDENSATE DRAIN
CI	CAST IRON
CO	CLEANOUT
CU	COPPER
CU. FT.	CUBIC FEET
CW	COLD WATER
CWV	COMBINED WASTE AND VENT
DI	DUCTILE IRON
DN	DOWN
E	EXISTING
E.C.	ELECTRICAL CONTRACTOR
ELEV	ELEVATION
FCO	FLOOR CLEANOUT
FPS	FEET PER SECOND
FU	FIXTURE UNIT
G	GAS
GAL	GALLONS
GPD	GALLONS PER DAY
GPH	GALLONS PER HOUR
GPM	GALLONS PER MINUTE
HD	HEAD
HP	HORSEPOWER
HW	HOT WATER
HWR	HOT WATER RECIRC.
ID	INSIDE DIAMETER
IPS	INTERNATIONAL PIPE SIZE
LF	LINEAR FEET
MAX	MAXIMUM
M.C.	MECHANICAL CONTRACTOR
MIN	MINIMUM
NTS	NOT TO SCALE
OD	OVERFLOW DRAIN OR OUTSIDE DIAMETER
P.C.	PLUMBING CONTRACTOR
POC	POINT OF CONNECTION
PRV	PRESSURE REDUCING VALVE
PSI	POUNDS PER SQUARE INCH
PSIA	PSI ABSOLUTE
PSIG	PSI GAUGE
RECIRC	RECIRCULATION
RPM	REVOLUTIONS PER MINUTE
SD	STORM DRAIN
SWCI	SERVICE WEIGHT CAST IRON
TYP	TYPICAL
U.O.N	UNLESS OTHERWISE NOTED
VAC	VACUUM
WCO	WALL CLEANOUT
WHA	WATER HAMMER ARRESTOR WITH
W/	

DOMESTIC WATER SYSTEMS

SYMBOL	DESCRIPTION
	BALANCING (PLUG) VALVE
	CHECK VALVE
	STOP VALVE
	GATE VALVE (NORMALLY OPEN)
	GATE VALVE (NORMALLY CLOSED)
CV	CURB VALVE (NORMALLY OPEN)
PIV	POST INDICATOR VALVE (NORMALLY OPEN)
	UNION
	FLANGED CONNECTION
(S)	SOLENOID VALVE
	ANGLE VALVE
R	ASME APPROVED T&P RELIEF VALVE
	GLOVE VALVE
	THREE-WAY VALVE
	PRESSURE GAUGE
	THERMOMETER
T	TEMPERATURE SWITCH (AQUASTAT)
TT	WELL FOR TEMPERATURE SENSOR BY BAS CONTRACTOR
FS	FLOW SWITCH
PS	PRESSURE SWITCH
	STRAINER
SA	ANTI-WATER HAMMER DEVICE (PDI RATING AS NOTED)
	BASE MOUNTED PUMP
TP	AUTOMATIC TRAP PRIMER W/ BACKFLOW PREVENTION
ETP	ELECTRONIC TRAP PRIMER W/ BACKFLOW PREVENTION
DU	TRAP PRIMER DISTRIBUTION UNIT
MTR	WATER METER W/ FLANGED CONNECTIONS
	FLANGED CIRCULATING PUMP W/ BRONZE CASING&IMPELLER
HB	HOSE BIB
WH	WALL HYDRANT
MTR	WATER METER ASSEMBLY W/ GATE VALVES & UNIONS
MTR	FLANGED WATER METER ASSEMBLY W/ GATE VALVES
	DOUBLE CHECK VALVE BACKFLOW PREVENTER W/ DRIP
	REDUCED PRESSURE ZONE BACKFLOW PREVENTER
	THERMOSTATIC MIXING VAVLE
	SHOWER HEAD
	SHOW VALVE (ANTI-SCALD PRESSURE BALANCED TYPE)
	LUBRICATED PLUG VALVE (FOR NATURAL GAS)
	CIRCUIT SETTER
	PRESSURE REGULATOR
P	PRESSURE REDUCING VALVE
	CAP OR PLUG

SANITARY SYSTEMS

SYMBOL	DESCRIPTION
FCO	HEAVY DUTY FLOOR CLEANOUT
DPCO DPCO	DECK PLATE CLEANOUT
CO/WCO	HORIZONTAL/WALL CLEANOUT
VTR VTR	VENT THROUGH ROOF W/ FLASHING & COUNTERFLASHING
	TRAP
AD	ACCESS DOOR
FD FD	FLOOR DRAIN W/ TRAP
FR FR	FLOOR RECEPTOR W/ SPLASH PROOF RIM
FFD FFD	FUNNEL FLOOR DRAIN
	TRENCH DRAIN
	FD, FR, ETC. W/ TRAP
FS	FLOOR SINK W/ GRATE AS SHOWN
RR	ROOF RECEPTOR

PIPING MATERIALS

1. SANITARY SEWER, VENT, AND STORM DRAIN BELOW GRADE:
PIPE: ABS PIPE, SOLID WALL SCHEDULE 40 ASTM D 2661
FITTINGS: ABS SOCKET FITTINGS, ASTM D 2661 MADE TO ASTM D 3311.
JOINTS: ABS SOLVENT CEMENT.

2. SANITARY SEWER, VENT, AND STORM DRAIN ABOVE GRADE, GREASE WASTE ABOVE AND BELOW GRADE:
PIPE: SERVICE WEIGHT CAST IRON PER ASTM A-74, ASTM A-88, CISPI 301.
FITTINGS: NO HUB CAST IRON PER ASTM A-888.
JOINTS: BAND TYPE STAINLESS STEEL COUPLINGS CONFORMING TO ASTM C-1540 HAVING MINIMUM SHIELD THICKNESS OF 31 GAUGE WITH NEOPRENE SEALING SLEEVE CONFORMING TO ASTM C-564.

3. DOMESTIC WATER BELOW GRADE:
PIPE: TYPE K SOFT COPPER TUBE ANNEALED TEMPER, ASTM B88.
FITTINGS: WROUGHT COPPER, ANSI B16.22
JOINTS: BRAZED JOINT.

4. DOMESTIC WATER ABOVE GRADE:
PIPE: TYPE L HARD DRAWN COPPER, ASTM B88.
FITTINGS: WROUGHT COPPER, ANSI B16.22.
JOINTS: 95%-5% TIN-ANTIMONY LEAD FREE SOLDER.

5. NATURAL GAS BELOW GRADE OUTSIDE THE BUILDING:
PIPE: POLYETHYLENE, PE 2406 OR PE 3408, ASTM D 2513.
FITTINGS: PE FITTING CONFORM TO ASTM D 2683 FOR SOCKET TYPE AND ASTM D BUTT FUSION TYPE.
JOINTS: HEAT FUSION JOINTS IN ACCORDANCE WITH ASTM D 2657.

6. NATURAL GAS ABOVE GRADE:
PIPE: SCHEDULE 40 BLACK STEEL, ASTM A53.
FITTINGS: 150LB MALLEABLE IRON THREADED, ANSI B16.3. FLANGED, ANSI B16.9, STEEL
JOINTS: 2" AND SMALLER, THREADED.

7. TRAP PRIMER BELOW GRADE:
PIPE: TYPE K SOFT COPPER TUBE, ANNEALED TEMPER, ASTM B88.
FITTINGS: WROUGHT COPPER, ANSI B16.22
JOINTS: BRAZED JOINT.

APPLICABLE CODES

BUILDING CODES:

APPLICABLE CODES AS OF JANUARY 1, 2020:

2019 CALIFORNIA BUILDING STANDARDS ADMINISTRATIVE CODE, PART1, TITLE 24 C.C.R. ;

2019 CALIFORNIA BUILDING CODE (CBC), PART 2, TITLE 24 C.C.R. ;
(2018 INTERNATIONAL BUILDING CODE & 2019 CALIFORNIA AMENDMENTS)

2019 CALIFORNIA ELECTRICAL CODE (CEC), PART 3, TITLE 24 C.C.R. ;
(2017 NATIONAL ELECTRICAL CODE & 2019 CALIFORNIA AMENDMENTS)

2019 CALIFORNIA MECHANICAL CODE (CMC), PART 4, TITLE 24 C.C.R. ;
(2018 UNIFORM MECHANICAL CODE & 2019 CALIFORNIA AMENDMENTS)

2019 CALIFORNIA PLUMBING CODE (CPC), PART 5, TITLE 24 C.C.R. ;
(2018 UNIFORM PLUMBING CODE & 2019 CALIFORNIA AMENDMENTS)

2019 CALIFORNIA ENERGY CODE (CEC), PART 6, TITLE 24 C.C.R. ;

2019 CALIFORNIA FIRE CODE (CFC), PART 9, TITLE 24 C.C.R. ;
(2018 INTERNATIONAL FIRE CODE & 2019 CALIFORNIA AMENDMENTS)

2019 CALIFORNIA GREEN BUILDING STANDARDS CODE (CALGreen), PART 11, TITLE 24 C.C.R. ;

2019 CALIFORNIA REFERENCED STANDARDS, PART 12, TITLE 24 C.C.R. ;

TITLE 19 C.C.R., PUBLIC SAFETY, STATE FIRE MARSHAL REGULATIONS

Zoning: CanningK 11/13/2024

Building&Safety: OCPWAzarvandB 12/22/2025

Permits: BNR21-0246, ELE21-0853, MEC21-0514, PLB21-0900

County of Orange - OC Public Works
OC Development Services
APPROVED
This set of plans and specifications must be kept on the job at all times. It is unlawful to make any changes or alterations to these plans without written permission from OC Public Works, OC Development Services of Orange County. The stamping of these plan specifications SHALL NOT be held to permit or be an approval of the violation of any provisions of any County Ordinance or State law.
Hani Tahsheen
BUILDING OFFICIAL

GENERAL NOTES

1. ALL CONSTRUCTION AND MATERIALS SHALL BE AS SPECIFIED AND IN ACCORDANCE WITH ALL APPLICABLE CODES, ORDINANCES, LAWS, PERMITS, AND THE CONTRACT DOCUMENTS.
2. THE CONTRACTOR SHALL BE RESPONSIBLE FOR THE ACCURATE PLACEMENT OF ALL NEW CONSTRUCTION ON THE SITE.
3. THE CONTRACTOR SHALL VERIFY ALL SITE CONDITIONS AND DIMENSIONS, AND VERIFY EXACT LOCATIONS AND ELEVATIONS OF PIPING POINTS OF CONNECTION BY MEANS OF PHYSICAL EXCAVATION AND SELECTIVE DEMOLITION BEFORE STARTING WORK. SHOULD A DISCREPANCY APPEAR IN THE CONTRACT DOCUMENTS, OR BETWEEN THE CONTRACT DOCUMENTS AND EXISTING CONDITIONS, NOTIFY THE ARCHITECT AT ONCE FOR INSTRUCTION ON HOW TO PROCEED.
4. SEWER, WATER, AND STORM DRAIN SYSTEMS INDICATED IN THESE DRAWINGS SHALL EXTEND TO PLUMBING/CIVIL POINTS OF CONNECTION AT 5'-0" OUTSIDE OF THE BUILDING(S) UNLESS NOTED OTHERWISE. CONTINUATION OF THESE PIPING SYSTEMS ARE INDICATED ON THE CIVIL DRAWINGS WITH CORRESPONDING ASSOCIATED MATERIALS SPECIFIED UNDER A SEPARATE SECTION OF THE PROJECT SPECIFICATIONS. ALL SUCH PIPING SHALL BE INSTALLED IN A MANNER TO PROVIDE PROPER CONNECTION TO INVERT ELEVATIONS INDICATED ON CIVIL DRAWINGS. WHERE SIZES DIFFER BETWEEN PLUMBING AND CIVIL DRAWINGS, CONTRACTOR SHALL PROVIDE TRANSITION FITTINGS AS NECESSARY TO ALLOW FOR PROPER CONNECTION.
5. HORIZONTAL SOIL, WASTE, GREASE WASTE, AND TRAP PRIMER PIPING WITHIN THE BUILDING SHALL BE INSTALLED CONCEALED WITHIN WALLS. BELOW FINISH FLOOR, OR BELOW FINISH SLAB AS APPLICABLE UNLESS NOTED OTHERWISE. ALL OTHER HORIZONTAL PIPING WITHIN THE BUILDING SHALL BE INSTALLED CONCEALED ABOVE CEILING OR WITHIN WALLS AS APPLICABLE UNLESS NOTED OTHERWISE. ALL VERTICAL PIPING SHALL BE INSTALLED CONCEALED WITHIN WALLS UNLESS NOTED OTHERWISE. NO PIPING SHALL BE INSTALLED IN EXPOSED LOCATIONS UNLESS SPECIFICALLY NOTED AS SUCH ON PLANS.
6. HORIZONTAL CONDENSATE PIPING SHALL SLOPE AT 1/8" PER FOOT UNLESS NOTED OTHERWISE.
7. NATURAL GAS PIPE SIZING CALCULATIONS ARE BASED ON A CALORIC CONTENT OF 1,000 BTU'S PER CUBIC FOOT.
8. PIPING BETWEEN EACH PLUMBING FIXTURE AND THE NEAREST BRANCH OR MAIN PIPING RUN SHALL BE SIZED TO MATCH THE CORRESPONDING FIXTURE SCHEDULE CONNECTION SIZE AT A MINIMUM UNLESS NOTED AS A LARGER SIZE ON PLANS. PIPE HEADERS IN WALLS SERVING BANKS OF FIXTURES SHALL BE FULL LINE SIZE FROM THE UPSTREAM END OF THE BRANCH LINE TO THE END TERMINAL UNLESS NOTED OTHERWISE.
9. REFER TO ARCHITECTURAL DRAWINGS FOR LOCATIONS, ROUGH IN DIMENSIONS, AND MOUNTING HEIGHTS OF ALL FIXTURES, EQUIPMENT, ACCESS PANELS, HOSE BIBBS, RECESSED HOSE BIBBS, OVERFLOW DRAIN TERMINATION POINTS, AND OTHER EXPOSED PLUMBING ELEMENTS. WHERE DIMENSIONS ARE NOT INDICATED, SEEK ARCHITECT'S DIRECTION AND/OR APPROVAL PRIOR TO INSTALLATION.
10. ACCESS PANELS
- WHERE POSSIBLE, USE SAME ACCESS PANEL FOR SHUT-OFF VALVES, MIXING VALVES, TRAP PRIMERS AND WATER HAMMER ARRESTORS AND/OR OTHER INTERIOR WALL COMPONENTS WHEN LOCATED DIRECTLY ADJACENT IN SAME IMMEDIATE VICINITY. SEE ARCHITECTURAL DRAWINGS FOR MOUNTING HEIGHTS.

11. CLEANOUTS
- PROVIDE CLEANOUTS PER CPC.
- INTERIOR CLEANOUTS SHALL BE WALL CLEANOUTS RATHER THAN FLOOR CLEANOUTS UNLESS OTHERWISE INDICATED, SHALL BE READILY ACCESSIBLE, AND SHALL BE CAREFULLY COORDINATED WITH CASEWORK, EQUIPMENT, AND OTHER ITEMS TO AVOID CONFLICT. NOT ALL REQUIRED CLEANOUTS ARE INDICATED ON PLANS. WALL CLEANOUTS IN FINISHED SPACES SHALL BE INSTALLED IN ACCESS PANELS. SEE SPECIFICATIONS FOR ACCESS PANEL REQUIREMENTS.

12. EXTERIOR YARD BOXES AND CLEANOUTS SHALL BE INSTALLED IN EXACT LOCATIONS INDICATED ON PLANS. IN THE EVENT OF A CONFLICT OR DISCREPANCY, NOTIFY THE ARCHITECT AT ONCE FOR INSTRUCTION ON HOW TO PROCEED.
13. EXTERIOR WATER SHUT-OFF VALVES AND GAS SHUT-OFF COCKS SHALL BE INSTALLED WITHIN CONCRETE YARD BOXES. YARD BOX AND CLEANOUT COVERS SHALL BE CLEARLY STAMPED WITH "WATER", "GAS", OR "SEWER" AS APPLICABLE. YARD BOXES SHALL BE EQUIVALENT TO "CHRISTY" MODEL No. B03. VALVES SHALL BE INSTALLED AND PROPERLY POSITIONED WITHIN YARD BOX TO ALLOW FOR FULL RANGE OF OPERATION, MAINTENANCE, REPAIR, AND REPLACEMENT. ALL YARD BOXES AND CLEANOUT COVERS SHALL ALIGN WITH SCORED HARDSCAPE JOINTS PER LANDSCAPE PLANS. YARD BOX COVERS SHALL BE CONCRETE. SEWER CLEANOUT COVERS SHALL BE BRASS. REFER TO SPECIFICATIONS FOR ADDITIONAL INFORMATION.
14. VERIFY EXACT LOCATIONS OF ALL MECHANICAL AND/OR OTHER EQUIPMENT INSTALLED BY OTHERS AND REQUIRING PLUMBING CONNECTIONS PRIOR TO ORDERING OF MATERIALS OR INSTALLATION. COORDINATE EXACT ROUGH-IN LOCATIONS AND REQUIREMENTS WITH OTHER INSTALLING CONTRACTORS AS APPLICABLE PRIOR TO INSTALLATION.
15. ADA LAVATORIES AND SINKS SHALL BE PROVIDED WITH ADA INSULATED TRAP AND SUPPLY COVERS AS SPECIFIED.
16. ADA WATER CLOSETS SHALL BE INSTALLED WITH FLUSH VALVE ACTUATOR HANDLE LOCATED ON THE WHEEL CHAIR ACCESS SIDE.
17. SHUTOFF VALVES, SHUT-OFF COCKS, WATER CONTROL DEVICES, CLEANOUTS, AND OTHER PIPING APPURTENANCES SHALL BE THE SAME SIZE AS PIPING SERVED UNLESS NOTED OTHERWISE.
18. REFER TO MECHANICAL DRAWINGS FOR MECHANICAL MANDATORY MEASURES AND ASSOCIATED REQUIREMENTS.
19. REFER TO ARCHITECTURAL DRAWINGS FOR LOCATIONS OF ALL FIRE RATED ASSEMBLIES. PROVIDE FIRESTOPPING AT PENETRATIONS THROUGH FIRE RETARDANT CONSTRUCTION IN ACCORDANCE WITH SPECIFICATIONS.
20. PENETRATIONS OF FIRE-RESISTIVE WALLS, FLOOR-CEILINGS AND ROOF-CEILINGS SHALL BE PROTECTED AS REQUIRED IN CBC SECTION 714.
21. DOMESTIC WATER PIPING AND COMPONENTS SHALL BE PROVIDED AND INSTALLED IN COMPLIANCE WITH CALIFORNIA AB 1953 LEGISLATION (EFFECTIVE JANUARY 1, 2010), WHICH LIMITS THE ALLOWABLE LEAD CONTENT IN CERTAIN DOMESTIC WATER SYSTEM COMPONENTS.

CALIFORNIA GREEN BUILDING STANDARDS

1. SEPERATE SUBMETERS SHALL BE INSTALLED IN ANY NEW ADDITION OR SPACE WITHIN THE ADDITION THAT IS PROJECTED TO CONSUME MORE THAN 1,000 GALLONS PER DAY.
2. NEW PLUMBING FIXTURES AND FITTINGS SHALL NOT EXCEED THE MAXUMUM ALLOWABLE FLOW RATES SPECIFIED

CITY OF DANA POINT
PLANNING DIVISION

This plan has been reviewed for ZONING ONLY and meets the requirements of Title 9 of the Dana Point Municipal Code.

APPROVED KBN

DATE 10/21/24

COMMENTS BUILDING 12 (OC PERMIT PKG21-0516) PER CDP13-0018(I).

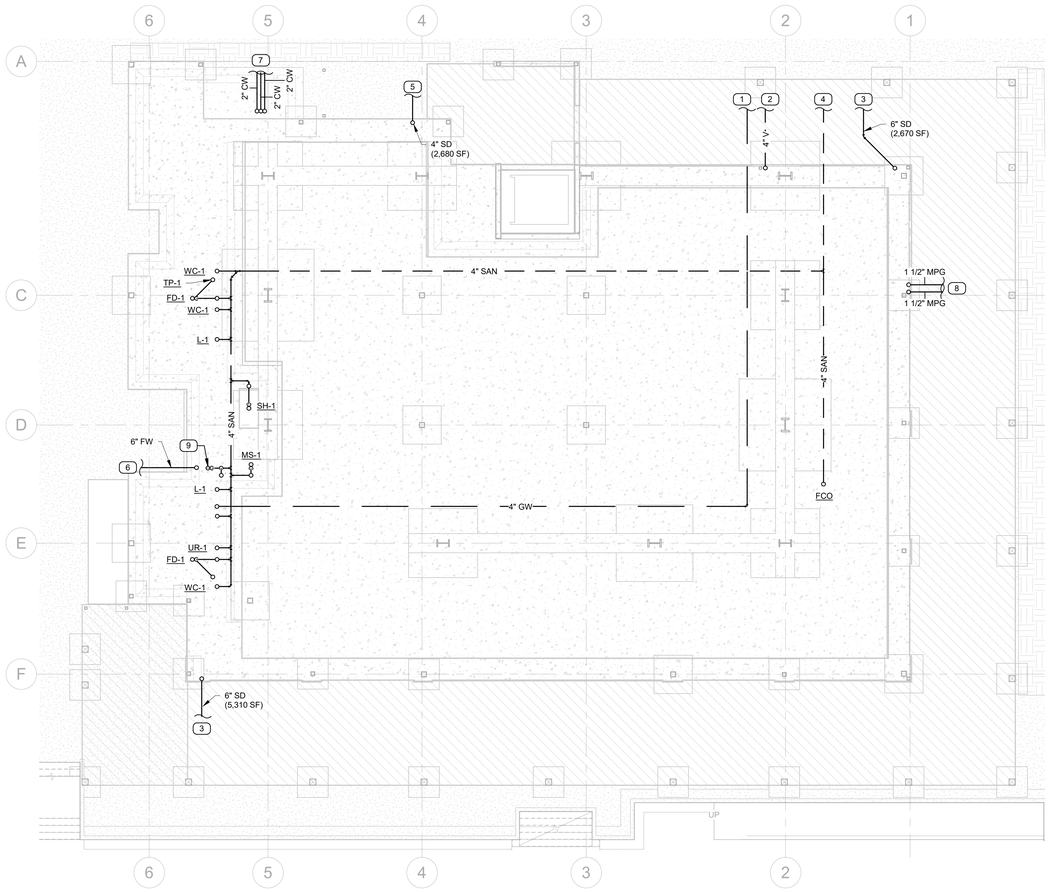

1 UNDERGROUND PLUMBING PLAN
1/8" = 1'-0"

Zoning: CanningK **11/13/2024**

Building&Safety: OCPWAzarvandB **12/22/2025**

Permits: BNR21-0246, ELE21-0853, MEC21-0514, PLB21-0900

County of Orange - OC Public Works
OC Development Services
APPROVED

This set of plans and specifications must be kept on the job at all times. It is unlawful to make any changes or alterations to these plans without written permission from OC Public Works, OC Development Services of Orange County. The stamping of these plan specifications SHALL NOT be held to permit or be an approval of the violation of any provisions of any County Ordinance or State law.

Hani Tahsbsaee
BUILDING OFFICIAL

GENERAL NOTES

1. REFER TO CIVIL DRAWINGS FOR INVERT ELEVATIONS FOR ALL PIPING SYSTEMS.
2. PROVIDE A CLEANOUT AT THE BASE OF ALL ROOF DRAIN LEADERS BEFORE THE PIPE CONNECTS TO THE HORIZONTAL DRAIN.
3. ALL SANITARY AND GREASE WASTE LINES SHALL SLOPE AT 2%, REGARDLESS OF DIAMETER.
4. SEE ISOMETRIC DRAWINGS FOR PIPE SIZING IN RESTROOMS.

PLAN NOTES "X"

1 4" GREASE WASTE LINE BELOW GRADE CONTINUED ON CIVIL DRAWINGS.
2 4" VENT LINE FROM GREASE INTERCEPTOR. SEE ARCHITECTURAL SITE PLAN FOR LOCATION.
3 PRIMARY STORM DRAIN BELOW GRADE CONTINUED ON CIVIL DRAWINGS.
4 4" SANITARY LINE BELOW GRADE CONTINUED ON CIVIL DRAWINGS.
5 VERTICAL STORM DRAIN LEADER TO TIE INTO STORM DRAIN CHANNEL UNDER SIDEWALK & SPILL OUT TO FACE OF CURB.
6 6" FIRE SERVICE LINE BELOW GRADE CONTINUED ON CIVIL DRAWINGS.
7 2" DOMESTIC WATER LINES BELOW GRADE CONTINUED ON CIVIL DRAWINGS.
8 (2)1-1/2" MEDIUM PRESSURE GAS SERVICE LINE(S) BELOW GRADE CONTINUED ON CIVIL DRAWINGS.
9 6" STANDPIPE DRAIN. SEE STANDPIPE DRAIN DETAIL #3/P3.1.1.

SMSARCHITECTS
100 Progress #250
Irvine, California 92618
949.757.3240 | www.sms-arch.com

CONSTANT
LINWOOD ENGINEERING INC
2301 dupont drive, suite 150
irvine, ca 92612 • 714.424.0001
www.linwoodengineering.com

DANA POINT HARBOR PARTNERS

PROJECT NAME
DANA POINT HARBOR COMMERCIAL CORE
BUILDING 12
1290 HARBOR WAY
DANA POINT, CA 92629

CLIENT
BWP PROPERTIES
BURNHAM|WARD

REGISTERED PROFESSIONAL ENGINEER
ADAM K. FRANKLIN
M34633
MECHANICAL
STATE OF CALIFORNIA
EXP. 12/31/23

No.	DATE	ISSUE
	06/01/2021	COUNTY SUBMITTAL
	09/24/2021	COUNTY RESUBMITTAL
	12/06/2022	50% DESIGN DEVELOPMENT
	02/10/2023	100% DESIGN DEVELOPMENT
	03/03/2023	50% CD PROGRESS SET
	04/21/2023	COUNTY RESUBMITTAL
A	07/24/2023	CITY RESUBMITTAL

DRAWINGS AND WRITTEN MATERIAL APPEARING HEREIN CONSTITUTE ORIGINAL AND UNPUBLISHED WORK OF SMS ARCHITECTS AND MAY NOT BE DUPLICATED, USED OR DISCLOSED WITHOUT WRITTEN CONSENT OF THE ARCHITECT

PROJECT NO. 19019-12

DATE FEBRUARY 10, 2023

DRAWING TITLE
UNDERGROUND PLUMBING PLAN

DRAWING NO.
P2.1.0A

BIM 360://19274 Dana Point Harbor Revitalization_R21/19274_MEP Dana Point - Bldg 12 R21.rvt

7/28/2023 12:42:29 PM

CITY OF DANA POINT
PLANNING DIVISION

This plan has been reviewed for ZONING ONLY and meets the requirements of Title 9 of the Dana Point Municipal Code.

APPROVED KBN

DATE 10/21/24

COMMENTS BUILDING 12 (OC PERMIT PKG21-0516) PER CDP13-0018(I).

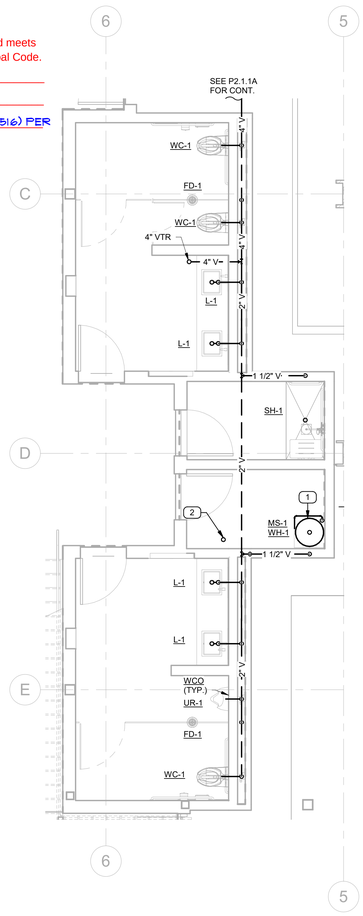

2 LEVEL 1 ENLARGED RESTROOM - SANITARY
1/4" = 1'-0"

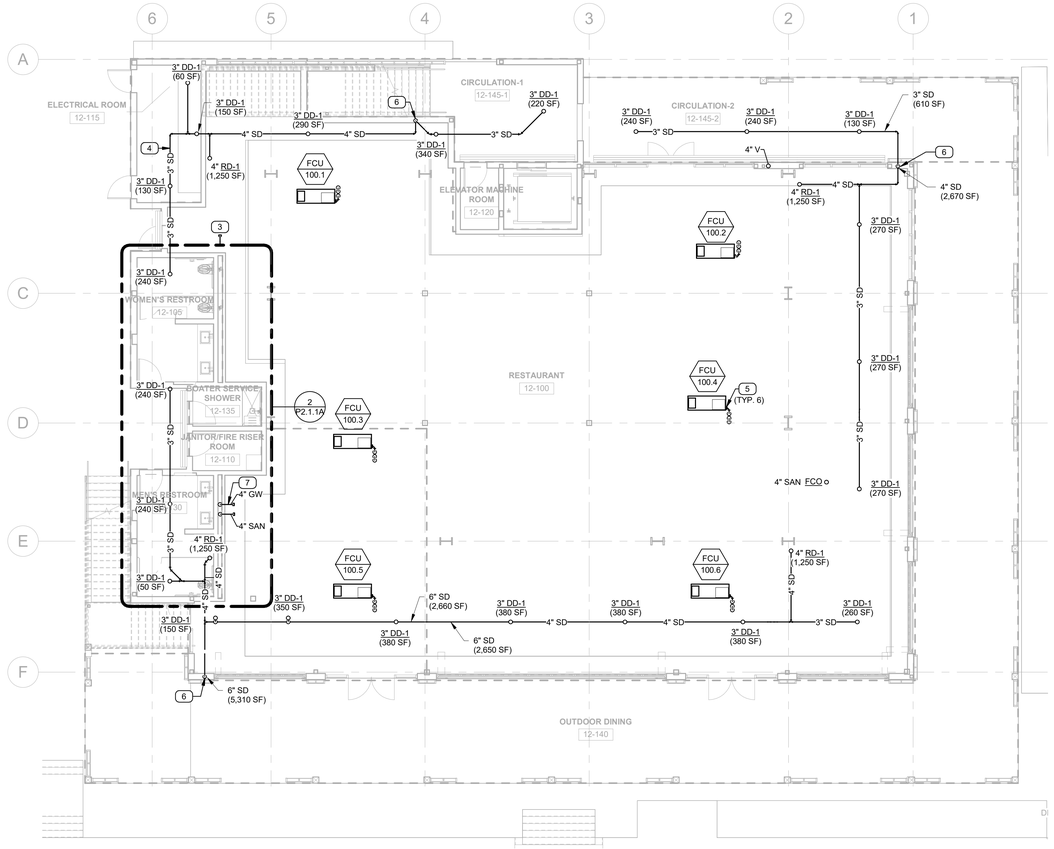

1 LEVEL 1 SANITARY PLAN
1/8" = 1'-0"

Zoning: CanningK **11/13/2024**

Building&Safety: OCPWAzarvandB **12/22/2025**

Permits: BNR21-0246, ELE21-0853, MEC21-0514, PLB21-0900

County of Orange - OC Public Works
OC Development Services
APPROVED

This set of plans and specifications must be kept on the job at all times. It is unlawful to make any changes or alterations to these plans without written permission from OC Public Works, OC Development Services of Orange County. The stamping of these plan specifications SHALL NOT be held to permit or be an approval of the violation of any provisions of any County Ordinance or State law.

Hind Tshetshasee
BUILDING OFFICIAL

GENERAL NOTES

1. REFER TO CIVIL DRAWINGS FOR INVERT ELEVATIONS FOR ALL PIPING SYSTEMS.
2. PROVIDE A CLEANOUT AT THE BASE OF ALL ROOF DRAIN LEADERS BEFORE THE PIPE CONNECTS TO THE HORIZONTAL DRAIN.
3. ALL SANITARY AND GREASE WASTE LINES SHALL SLOPE AT 2%, REGARDLESS OF DIAMETER.
4. SEE ISOMETRIC DRAWINGS FOR PIPE SIZING IN RESTROOMS.

PLAN NOTES "X"

1 FULL SIZE T&P BLOWOFF VALVE AND PAN DRAIN SHALL TERMINATE AT MOP SINK WITH 2" AIR GAP ABOVE FIXTURE FLOOD RIM.
2 6" STANDPIPE DRAIN. SEE STANDPIPE DRAIN DETAIL #3/P3.1.1.
3 4" VENT LINE CAPPED FOR FUTURE CONNECTION.
4 PROVIDE DRIP PAN BELOW ANY PIPING ROUTED THROUGH ELECTRICAL ROOM TO PROVIDE PROTECTION FROM LEAKS OR BREAKS.
5 3/4" CONDENSATE STUB FOR FUTURE TENANT CONNECTION. SEE #3/M3.1.2 FOR DETAIL.
6 PRIMARY STORM DRAIN BELOW GRADE CONTINUED ON CIVIL DRAWINGS.
7 SANITARTY AND GREASE WASTE LINES CAPPED FOR FUTURE TENANT CONNECTION. SEE P2.1.0A FOR CONTINUATION.

SMSARCHITECTS
100 Progress #250
Irvine, California 92618
949.757.3240 | www.sms-arch.com

CONSTANT
LINWOOD ENGINEERING INC
2301 dupont drive, suite 150
irvine, ca 92612 • 714.424.0001
www.linwoodengineering.com

DANA POINT HARBOR PARTNERS

PROJECT NAME
DANA POINT HARBOR COMMERCIAL CORE
BUILDING 12
1290 HARBOR WAY
DANA POINT, CA 92629

CLIENT
BURNHAM|WARD PROPERTIES
BWP

No.	DATE	ISSUE
	06/01/2021	COUNTY SUBMITTAL
	09/24/2021	COUNTY RESUBMITTAL
	12/06/2022	50% DESIGN DEVELOPMENT
	02/10/2023	100% DESIGN DEVELOPMENT
	03/03/2023	50% CD PROGRESS SET
	04/21/2023	COUNTY RESUBMITTAL
A	07/24/2023	CITY RESUBMITTAL

DRAWINGS AND WRITTEN MATERIAL APPEARING HEREIN CONSTITUTE ORIGINAL AND UNPUBLISHED WORK OF SMS ARCHITECTS AND MAY NOT BE DUPLICATED, USED OR DISCLOSED WITHOUT WRITTEN CONSENT OF THE ARCHITECT

PROJECT NO. 19019-12

DATE FEBRUARY 10, 2023

DRAWING TITLE
LEVEL 1 SANITARY PLAN

DRAWING NO.
P2.1.1A

BIM 360://19274 Dana Point Harbor Revitalization_R21/19274_MEP Dana Point - Bldg 12 R21.rvt

7/28/2023 12:42:30 PM

CITY OF DANA POINT
PLANNING DIVISION

This plan has been reviewed for ZONING ONLY and meets the requirements of Title 9 of the Dana Point Municipal Code.

APPROVED KBN

DATE 10/21/24

COMMENTS BUILDING 12 (OC PERMIT PKG21-0516) PER CDP13-0018(I).

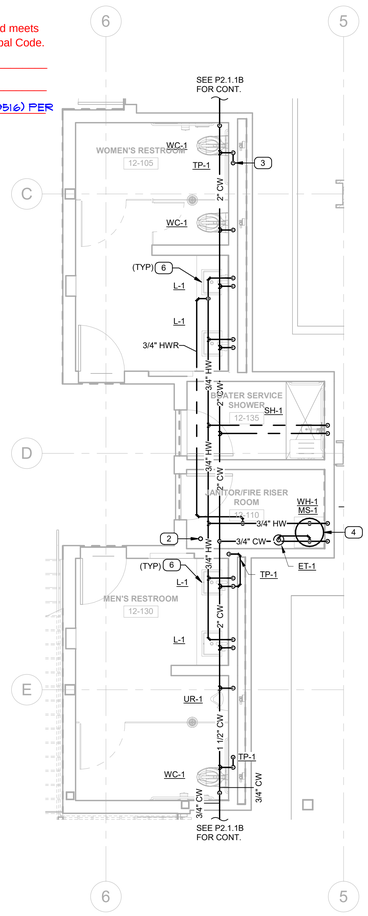

2 LEVEL 1 ENLARGED RESTROOM - DOMESTIC
1/4" = 1'-0"

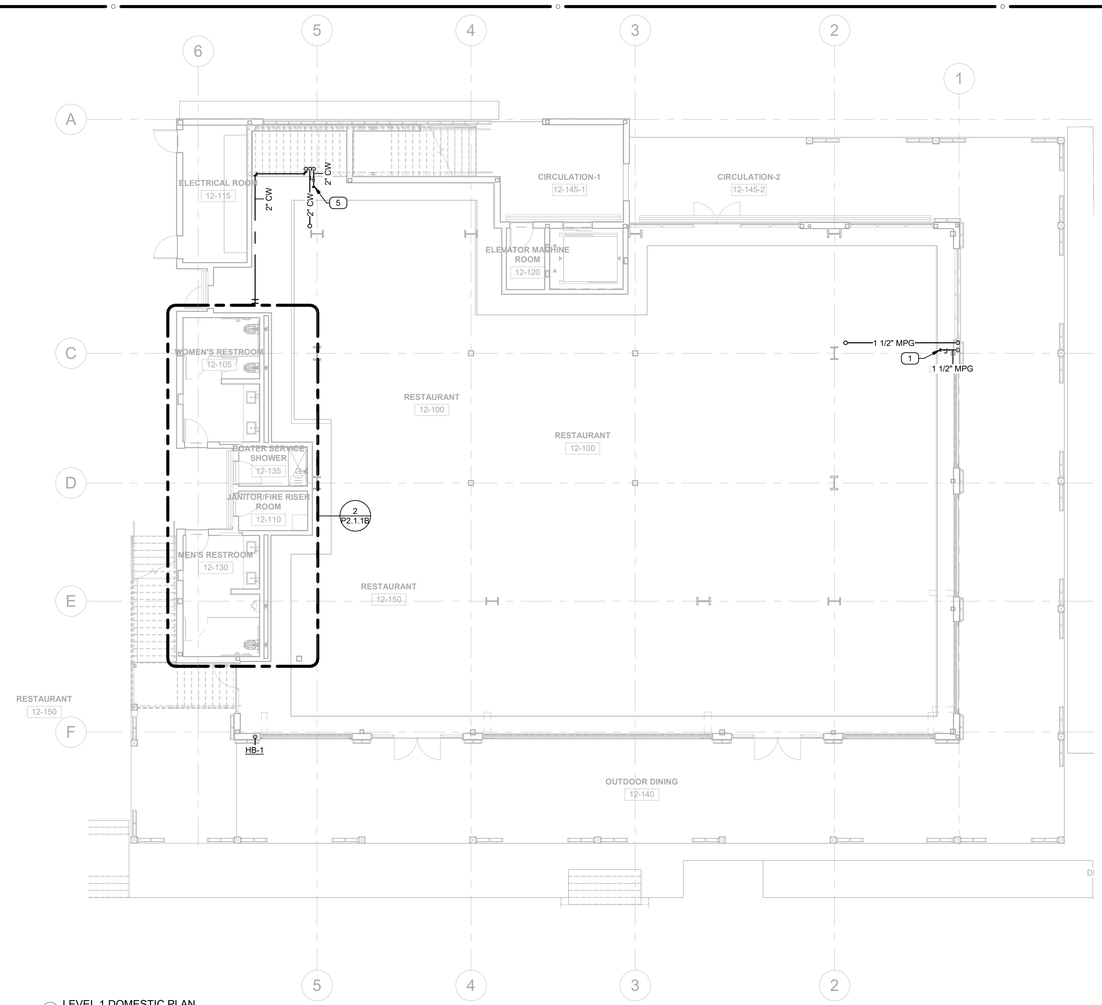

1 LEVEL 1 DOMESTIC PLAN
1/8" = 1'-0"

Zoning: CanningK 11/13/2024

Building&Safety: OCPWAzarvandB 12/22/2025

Permits: BNR21-0246, ELE21-0853, MEC21-0514, PLB21-0900

County of Orange - OC Public Works
OC Development Services
APPROVED

This set of plans and specifications must be kept on the job at all times. It is unlawful to make any changes or alterations to these plans without written permission from OC Public Works, OC Development Services of Orange County. The stamping of these plan specifications SHALL NOT be held to permit or be an approval of the violation of any provisions of any County Ordinance or State law.

Hani Tshetshaan
BUILDING OFFICIAL

GENERAL NOTES

1. REFER TO CIVIL DRAWINGS FOR INVERT ELEVATIONS FOR ALL PIPING SYSTEMS.
2. PROVIDE A CLEANOUT AT THE BASE OF ALL ROOF DRAIN LEADERS BEFORE THE PIPE CONNECTS TO THE HORIZONTAL DRAIN.
3. ALL SANITARY AND GREASE WASTE LINES SHALL SLOPE AT 2%, REGARDLESS OF DIAMETER.
4. SEE ISOMETRIC DRAWINGS FOR PIPE SIZING IN RESTROOMS.

PLAN NOTES "X"

1 1-1/2" MPG LINE (5 PSI) CAPPED FOR FUTURE CONNECTION (5,250 CFH MAXIMUM). PIPING SIZED BASED ON CPC TABLE 1215.2(6), TOTAL DEVELOPED LENGTH = 400 FEET.

2 6" FIRE WATER RISER BY OTHERS. SEE FIRE PROTECTION CONSULTANT DRAWINGS FOR MORE DETAIL.

3 1/2" DOMESTIC WATER TO TRAP PRIMER.

4 INSTALL WATER HEATER AND EXPANSION TANK ON PLATFORM ABOVE MOP SINK PER DETAIL #8/P3.1.1.

5 2" DOMESTIC WATER LINE CAPPED FOR FUTURE CONNECTION.

6 PROVIDE ACCESSIBLE BRADLEY S59-4000A MIXING VALVE SET TO 110°F IN WALL BENEATH SINK/LAVATORY.

SMSARCHITECTS
100 Progress #250
Irvine, California 92618
949.757.3240 | www.sms-arch.com

CONSTANT
LINWOOD ENGINEERING INC
2301 dupont drive, suite 150
irvine, ca 92612 • 714.424.0001
www.linwoodengineering.com

DANA POINT HARBOR PARTNERS

PROJECT NAME
DANA POINT HARBOR COMMERCIAL CORE
BUILDING 12
1290 HARBOR WAY
DANA POINT, CA 92629

CLIENT
BWP PROPERTIES
BURNHAM|WARD

No.	DATE	ISSUE
	06/01/2021	COUNTY SUBMITTAL
	09/24/2021	COUNTY RESUBMITTAL
	12/06/2022	50% DESIGN DEVELOPMENT
	02/10/2023	100% DESIGN DEVELOPMENT
	03/03/2023	50% CD PROGRESS SET
	04/21/2023	COUNTY RESUBMITTAL
A	07/24/2023	CITY RESUBMITTAL

DRAWINGS AND WRITTEN MATERIAL APPEARING HEREIN CONSTITUTE ORIGINAL AND UNPUBLISHED WORK OF SMS ARCHITECTS AND MAY NOT BE DUPLICATED, USED OR DISCLOSED WITHOUT WRITTEN CONSENT OF THE ARCHITECT

PROJECT NO 19019-12

DATE FEBRUARY 10, 2023

DRAWING TITLE
LEVEL 1 DOMESTIC PLAN

DRAWING NO.
P2.1.1B

BIM 360://19274 Dana Point Harbor Revitalization_R21/19274 MEP Dana Point - Bldg 12 R21.rvt

7/28/2023 12:42:31 PM

CITY OF DANA POINT
PLANNING DIVISION

This plan has been reviewed for ZONING ONLY and meets the requirements of Title 9 of the Dana Point Municipal Code.

APPROVED KBN

DATE 10/21/24

COMMENTS BUILDING 12 (OC PERMIT PKG21-0516) PER CDP13-0018(I).

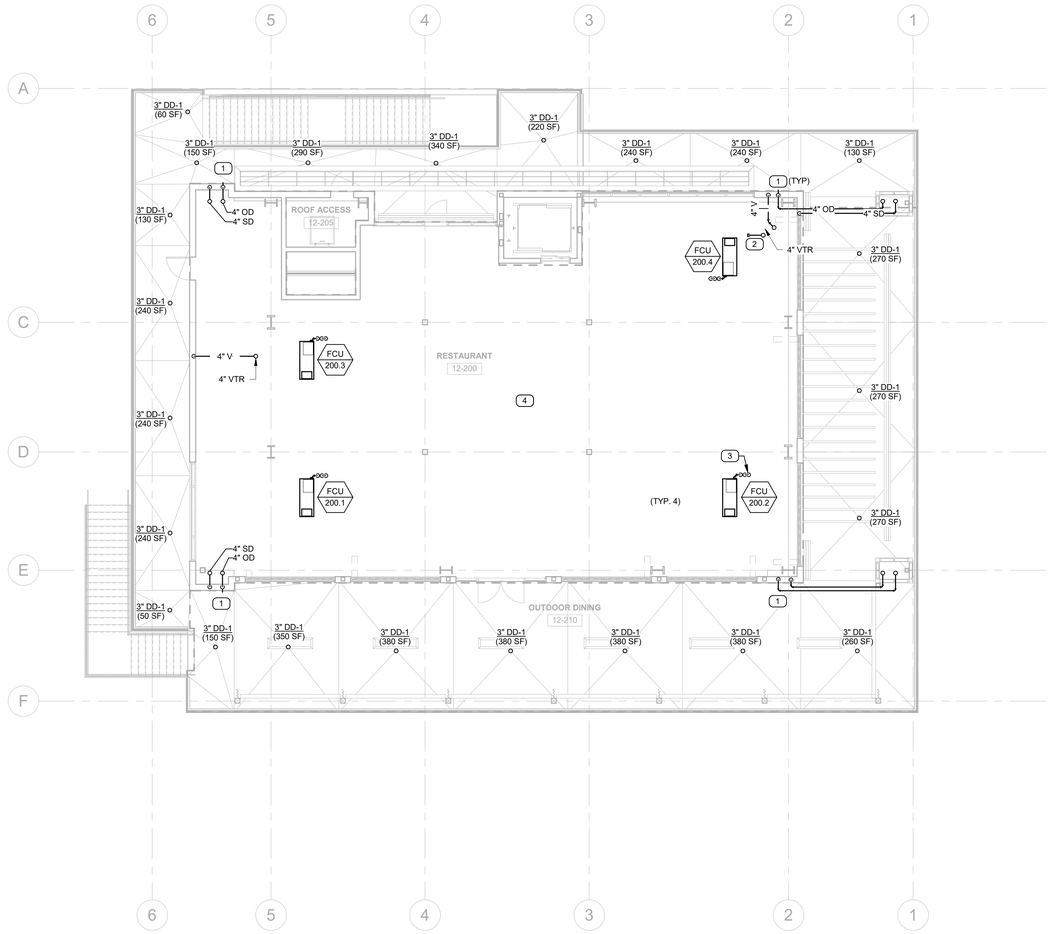

1 LEVEL 2 SANITARY PLAN
1/8" = 1'-0"

Zoning: CanningK 11/13/2024

Building&Safety: OCPWAzarvandB 12/22/2025

Permits: BNR21-0246, ELE21-0853, MEC21-0514, PLB21-0900

County of Orange - OC Public Works
OC Development Services
APPROVED

This set of plans and specifications must be kept on the job at all times. It is unlawful to make any changes or alterations to these plans without written permission from OC Public Works, OC Development Services of Orange County. The stamping of these plan specifications SHALL NOT be held to permit or be an approval of the violation of any provisions of any County Ordinance or State law.

Hind Tshetshasen
BUILDING OFFICIAL

GENERAL NOTES

1. REFER TO CIVIL DRAWINGS FOR INVERT ELEVATIONS FOR ALL PIPING SYSTEMS.
2. PROVIDE A CLEANOUT AT THE BASE OF ALL ROOF DRAIN LEADERS BEFORE THE PIPE CONNECTS TO THE HORIZONTAL DRAIN.
3. ALL SANITARY AND GREASE WASTE LINES SHALL SLOPE AT 2%, REGARDLESS OF DIAMETER.
4. SEE ISOMETRIC DRAWINGS FOR PIPE SIZING IN RESTROOMS.

PLAN NOTES "X"

1 OVERFLOW DRAIN WITH DOWNSPOUT COVER BY JAY R SMITH MODEL 1775 SHALL SPILL THROUGH DOWNSPOUT IN WALL TO GRADE (12" A.F.G.).
2 4" VENT LINE CAPPED FOR FUTURE CONNECTION.
3 3/4" CONDENSATE STUB FOR FUTURE TENANT CONNECTION. SEE #3/M3.1.2 FOR DETAIL.
4

SMSARCHITECTS
100 Progress #250
Irvine, California 92618
949.757.3240 | www.sms-arch.com

CONSTANT
LINWOOD ENGINEERING INC
230 dupont drive, suite 150
irvine, ca 92602 • 714.424.0003
www.linwoodengineering.com

DANA POINT HARBOR PARTNERS

PROJECT NAME
DANA POINT HARBOR COMMERCIAL CORE
BUILDING 12
1290 HARBOR WAY
DANA POINT, CA 92629

CLIENT
BURNHAM | WARD PROPERTIES

No.	DATE	ISSUE
	06/01/2021	COUNTY SUBMITTAL
	09/24/2021	COUNTY RESUBMITTAL
	12/06/2022	50% DESIGN DEVELOPMENT
	02/10/2023	100% DESIGN DEVELOPMENT
	03/03/2023	50% CD PROGRESS SET
	04/21/2023	COUNTY RESUBMITTAL
A	07/24/2023	CITY RESUBMITTAL

DRAWINGS AND WRITTEN MATERIAL APPEARING HEREIN CONSTITUTE ORIGINAL AND UNPUBLISHED WORK OF SMS ARCHITECTS AND MAY NOT BE DUPLICATED, USED OR DISCLOSED WITHOUT WRITTEN CONSENT OF THE ARCHITECT

PROJECT NO 19019-12

DATE FEBRUARY 10, 2023

DRAWING TITLE
LEVEL 2 SANITARY PLAN

DRAWING NO.
P2.1.2A

BIM 360://19274 Dana Point Harbor Revitalization_R21/19274 MEP Dana Point - Bldg 12 R21.rvt

7/28/2023 12:42:32 PM

CITY OF DANA POINT
PLANNING DIVISION

This plan has been reviewed for ZONING ONLY and meets the requirements of Title 9 of the Dana Point Municipal Code.

APPROVED KBN

DATE 10/21/24

COMMENTS BUILDING 12 (OC PERMIT PKG21-0516) PER CDP13-0018(I).

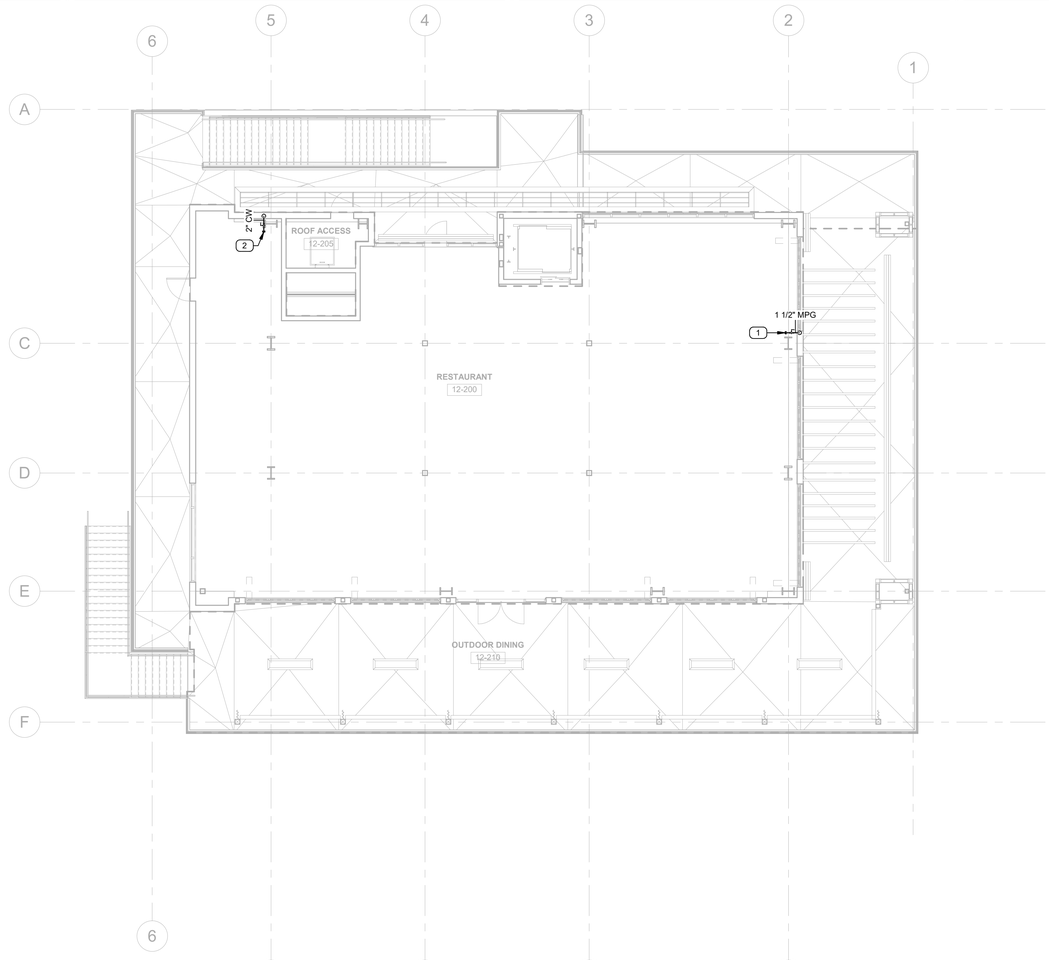

1 LEVEL 2 DOMESTIC PLAN
1/8" = 1'-0"

Zoning: CanningK 11/13/2024

Building&Safety: OCPWAzarvandB 12/22/2025

Permits: BNR21-0246, ELE21-0853, MEC21-0514, PLB21-0900

County of Orange - OC Public Works
OC Development Services
APPROVED

This set of plans and specifications must be kept on the job at all times. It is unlawful to make any changes or alterations to these plans without written permission from OC Public Works, OC Development Services of Orange County. The stamping of these plan specifications SHALL NOT be held to permit or be an approval of the violation of any provisions of any County Ordinance or State law.

Hind Tahtabawi
BUILDING OFFICIAL

GENERAL NOTES

1. REFER TO CIVIL DRAWINGS FOR INVERT ELEVATIONS FOR ALL PIPING SYSTEMS.
2. PROVIDE A CLEANOUT AT THE BASE OF ALL ROOF DRAIN LEADERS BEFORE THE PIPE CONNECTS TO THE HORIZONTAL DRAIN.
3. ALL SANITARY AND GREASE WASTE LINES SHALL SLOPE AT 2%, REGARDLESS OF DIAMETER.
4. SEE ISOMETRIC DRAWINGS FOR PIPE SIZING IN RESTROOMS.

PLAN NOTES "X"

1 1-1/2" MPG LINE (5 PSI) CAPPED FOR FUTURE CONNECTION (5,250 CFH MAXIMUM). PIPING SIZED BASED ON CPC TABLE 1215.2(6). TOTAL DEVELOPED LENGTH = 400 FEET.

2 2" DOMESTIC WATER LINE CAPPED FOR FUTURE CONNECTION.

SMSARCHITECTS
100 Progress #250
Irvine, California 92618
949.757.3240 | www.sms-arch.com

CONSTANT
LINWOOD ENGINEERING INC
2301 dupont drive, suite 150
irvine, ca 92612 • 714.424.0001
www.linwoodengineering.com

DANA POINT HARBOR PARTNERS

PROJECT NAME
DANA POINT HARBOR COMMERCIAL CORE
BUILDING 12
1290 HARBOR WAY
DANA POINT, CA 92629

CLIENT
BWP PROPERTIES
BURNHAM | WARD

No.	DATE	ISSUE
	06/01/2021	COUNTY SUBMITTAL
	09/24/2021	COUNTY RESUBMITTAL
	12/06/2022	50% DESIGN DEVELOPMENT
	02/10/2023	100% DESIGN DEVELOPMENT
	03/03/2023	50% CD PROGRESS SET
	04/21/2023	COUNTY RESUBMITTAL
A	07/24/2023	CITY RESUBMITTAL

DRAWINGS AND WRITTEN MATERIAL APPEARING HEREIN CONSTITUTE ORIGINAL AND UNPUBLISHED WORK OF SMS ARCHITECTS AND MAY NOT BE DUPLICATED, USED OR DISCLOSED WITHOUT WRITTEN CONSENT OF THE ARCHITECT

PROJECT NO 19019-12

DATE FEBRUARY 10, 2023

DRAWING TITLE
LEVEL 2 DOMESTIC PLAN

DRAWING NO.
P2.1.2B

BIM 360://19274 Dana Point Harbor Revitalization_R21/19274 MEP Dana Point - Bldg 12 R21.rvt

7/28/2023 12:42:33 PM

CITY OF DANA POINT
PLANNING DIVISION

This plan has been reviewed for ZONING ONLY and meets the requirements of Title 9 of the Dana Point Municipal Code.

APPROVED KBN

DATE 10/21/24

COMMENTS BUILDING 12 (OC PERMIT PKG21-0516) PER CDP13-0018(I).

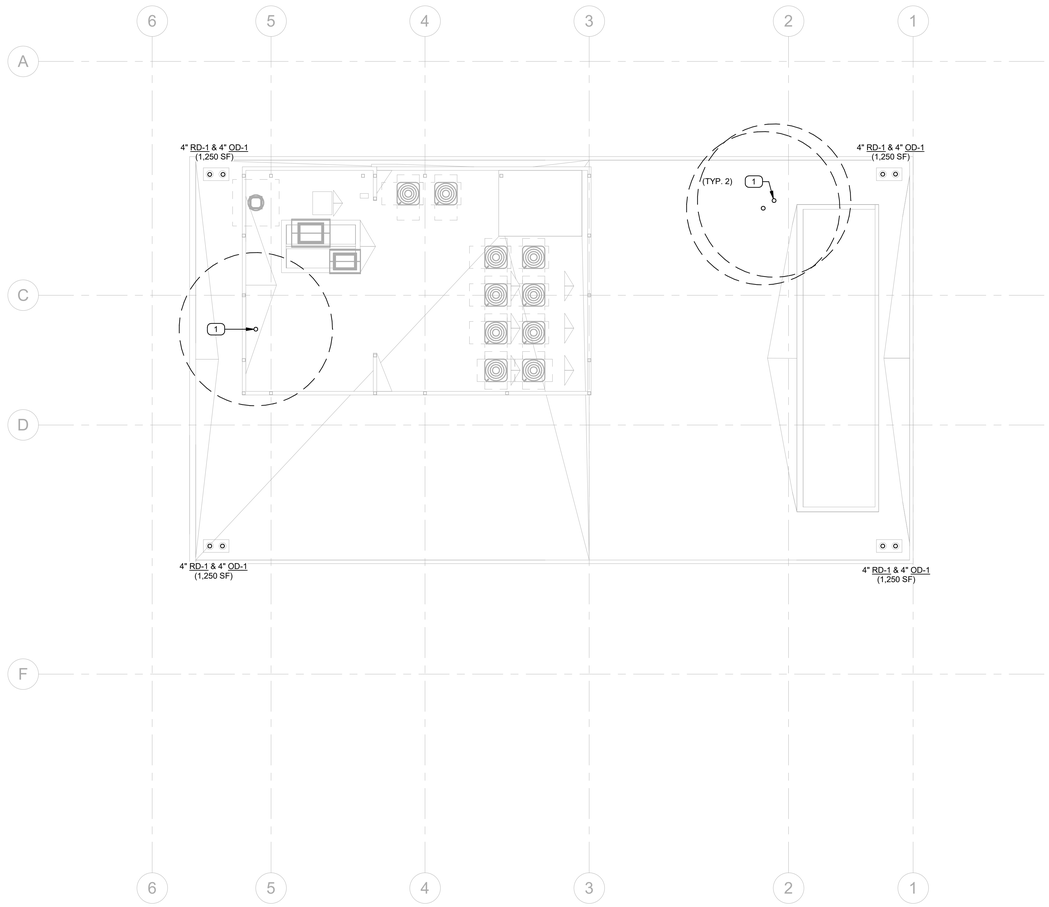

1 ROOF PLUMBING PLAN
1/8" = 1'-0"

Zoning: CanningK 11/13/2024

Building&Safety: OCPWAzarvandB 12/22/2025

Permits: BNR21-0246, ELE21-0853, MEC21-0514, PLB21-0900

County of Orange - OC Public Works
OC Development Services
APPROVED

This set of plans and specifications must be kept on the job at all times. It is unlawful to make any changes or alterations to these plans without written permission from OC Public Works, OC Development Services of Orange County. The stamping of these plan specifications SHALL NOT be held to permit or be an approval of the violation of any provisions of any County Ordinance or State law.

Hadi Tabatabaee
BUILDING OFFICIAL

GENERAL NOTES

1. REFER TO CIVIL DRAWINGS FOR INVERT ELEVATIONS FOR ALL PIPING SYSTEMS.
2. PROVIDE A CLEANOUT AT THE BASE OF ALL ROOF DRAIN LEADERS BEFORE THE PIPE CONNECTS TO THE HORIZONTAL DRAIN.
3. ALL SANITARY AND GREASE WASTE LINES SHALL SLOPE AT 2%, REGARDLESS OF DIAMETER.
4. SEE ISOMETRIC DRAWINGS FOR PIPE SIZING IN RESTROOMS.

PLAN NOTES "X"

1 4" VENT THROUGH ROOF. VERIFY VENT TERMINATION IS A MINIMUM 10 FT. HORIZONTALLY FROM OR 3 FT. ABOVE ANY AIR INTAKE.

SMSARCHITECTS
100 Progress #250
Irvine, California 92618
949.757.3240 | www.sms-arch.com

CONSTANT
LINWOOD ENGINEERING INC
2301 dupont drive, suite 150
irvine, ca 92612 • 714.424.0001
www.linwoodengineering.com

DANA POINT HARBOR PARTNERS

PROJECT NAME
DANA POINT HARBOR COMMERCIAL CORE
BUILDING 12
1290 HARBOR WAY
DANA POINT, CA 92629

CLIENT
BURNHAM|WARD PROPERTIES

No.	DATE	ISSUE
	06/01/2021	COUNTY SUBMITTAL
	09/24/2021	COUNTY RESUBMITTAL
	12/06/2022	50% DESIGN DEVELOPMENT
	02/10/2023	100% DESIGN DEVELOPMENT
	03/03/2023	50% CD PROGRESS SET
	04/21/2023	COUNTY RESUBMITTAL
A	07/24/2023	CITY RESUBMITTAL

DRAWINGS AND WRITTEN MATERIAL APPEARING HEREIN CONSTITUTE ORIGINAL AND UNPUBLISHED WORK OF SMS ARCHITECTS AND MAY NOT BE DUPLICATED, USED OR DISCLOSED WITHOUT WRITTEN CONSENT OF THE ARCHITECT

PROJECT NO. 19019-12

DATE FEBRUARY 10, 2023

DRAWING TITLE
ROOF PLUMBING PLAN

DRAWING NO.
P2.1.3

BIM 360://19274 Dana Point Harbor Revitalization_R21/19274 MEP Dana Point - Bldg 12 R21.rvt
7/28/2023 12:42:33 PM

CITY OF DANA POINT
PLANNING DIVISION

This plan has been reviewed for ZONING ONLY and meets the requirements of Title 9 of the Dana Point Municipal Code.

APPROVED KBN

DATE 10/21/24

COMMENTS BUILDING 12 (OC PERMIT PKG21-9516) PER CDP13-0018(I).

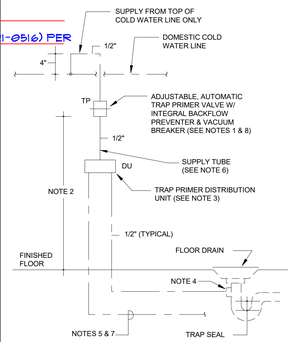

NOTES:

1. ADJUSTABLE TRAP PRIMER VALVE SHALL BE PPP, INC. #P2-500 FOR UP TO TWO F.D.'S & PPP, INC. #P1-500 FOR 3 THRU 4 F.D.'S. DO NOT LOCATE PRIMER VALVES WITHIN 40' OF ANOTHER PRIMER VALVE.
2. TRAP PRIMER VALVE SHALL BE MOUNTED VERTICALLY WITH BOTTOM OF UNIT LOCATED SUCH THAT HEIGHT ABOVE FLOODRIM OF HIGHEST F.D. IS NOT LESS THAN ONE FOOT FOR EACH 20' OF RUN TO FURTHEST F.D.
3. FURNISH & INSTALL DISTRIBUTION UNITS AS FOLLOWS:

NO. of F.D.'S	DISTRIBUTION UNIT(S)
1	NONE REQUIRED
2	PPP# DU-4/DU-U
3	PPP# DU-4/DU-U
4	PPP# DU-4/DU-U

4. PRIMER CONNECTIONS @ TRAPS SHALL BE LOCATED ABOVE TRAP WATER SEAL & TRAP OUTLET WEIR. PRIMER CONNECTIONS SHALL NOT BE MADE TO TRAP FLUSHING INLETS.
5. PRIMER SUPPLIES TO TRAPS WHICH ARE EMBEDDED IN, OR BURIED BELOW CONCRETE SLABS SHALL BE ANNEALED (SOFT) COPPER TUBE, TYPE "K" WITH FLARED OR COMPRESSION FITTING (SOLDER JOINTS NOT PERMITTED). PRIMER SUPPLIES LOCATED ABOVE SLABS ON GRADE SHALL BE DRAWN (HARD) COPPER TUBE OF THE TYPE SPECIFIED FOR THIS PROJECT.
6. SUPPLY TUBE(S) SHALL BE PPP, INC. #SS-8 FOR 2, 3, OR 4 F.D.'S.
7. ALL LINES FROM DISTRIBUTION UNIT(S) TO F.D.'S MUST PITCH TO F.D.
8. UPON COMPLETION OF THE INSTALLATION, ADJUST TRAP PRIMER VALVE TO ENSURE OPERATION UNDER ACTUAL OPERATING PRESSURE DROP. ENSURE VALVE CLOSES WHEN PRESSURE STABILIZES. VERIFY FLOW TO ALL CONNECTED TRAPS.

TRAP PRIMER DETAIL (N.T.S.) **7**

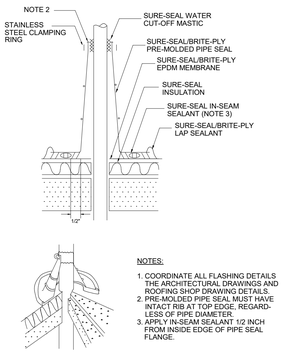

NOTES:

1. COORDINATE ALL FLASHING DETAILS THE ARCHITECTURAL DRAWINGS AND ROOFING SHOP DRAWING DETAILS.
2. PRE-MOLDED PIPE SEAL MUST HAVE INTACT RIB AT TOP EDGE, REGARD-LESS OF PIPE DIAMETER.
3. APPLY IN-SEAM SEALANT 1/2 INCH FROM INSIDE EDGE OF PIPE SEAL FLANGE.

FLASHING DETAIL FOR PIPES 4" AND SMALLER THROUGH ROOF (N.T.S.) **4**

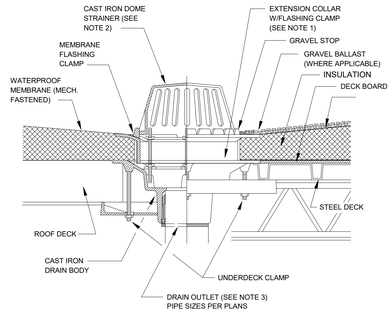

NOTES:

1. COORDINATE EXTENSION COLLAR DEPTH WITH INSULATION THICKNESS. (SEE ARCHITECTURAL DRAWINGS.)
2. CAST IRON DOME STRAINER TO BE MINIMUM 4" IN HEIGHT WITH FREE AREA OF AT LEAST 200% OF NOMINAL OUTLET AREA.
3. DRAIN OUTLET SHALL BE NO-HUB OR CAULKED AS REQUIRED FOR CAST IRON DRAINS; THREADED FOR STEEL DRAINS; OR NO-HUB OR "SPEEDI-SET" FOR PVC DRAINS. PROVIDE THREADED OUTLETS WHERE EXPANSION JOINTS ARE SPECIFIED.

ROOF DRAIN DETAIL FOR INSULATED DECK WITH MEMBRANE ROOFING (N.T.S.) **1**

NOTE: PLEASE SEE WATER HEATER SPECIFICATION AND DETAILS.
ALSO PROVIDE WALL MOUNT FOR EXPANSION TANK PER MANUFACTURERS RECOMMENDATION.

WATER HEATER SHELF ELEVATION (N.T.S.) **8**

FLOOR CLEANOUT DETAIL (N.T.S.) **5**

NOTES:

1. COORDINATE EXTENSION COLLAR DEPTH WITH INSULATION THICKNESS. (SEE ARCHITECTURAL DRAWINGS.)
2. CAST IRON DOME STRAINER TO BE MINIMUM 4" IN HEIGHT WITH FREE AREA OF AT LEAST 200% OF NOMINAL OUTLET AREA.
3. DRAIN OUTLET SHALL BE NO-HUB OR CAULKED AS REQUIRED FOR CAST IRON DRAINS; THREADED FOR STEEL DRAINS; OR NO-HUB OR "SPEEDI-SET" FOR PVC DRAINS. PROVIDE THREADED OUTLETS WHERE EXPANSION JOINTS ARE SPECIFIED.
4. WATER DAM COLLAR TO BE 2" HIGH, FIELD INSTALLABLE, SOLID CAST IRON, WITHOUT PERFORATIONS.

OVERFLOW ROOF DRAIN DETAIL FOR INSULATED DECK WITH MEMBRANE ROOFING (N.T.S.) **2**

NOTES: 1. ALL ELECTRICAL BRANCH CIRCUIT & CONTROL WIRING IS FURNISHED AND INSTALLED BY THE ELECTRICAL CONTRACTOR. LOW VOLTAGE CONTROL WIRING SHALL BE FURNISHED AND INSTALLED BY CONTRACTOR SUPPLYING EQUIPMENT.

TYPICAL WATER HEATER PIPING DETAIL (N.T.S.) **9**

NOTES:

1. ELECTRONIC TRAP PRIMER VALVE SHALL BE PPP, INC. #MP-500 FOR UP TO FOUR F.D.'S
2. TRAP PRIMER VALVE SHALL BE MOUNTED VERTICALLY WITH BOTTOM OF UNIT A MINIMUM ELEVATION OF 12 INCHES ABOVE THE FINISHED FLOOR.
3. FURNISH & INSTALL DISTRIBUTION UNITS AS FOLLOWS:

NO. of F.D.'S	DISTRIBUTION UNIT(S)
1	NONE REQUIRED
2	PPP# DU-2
3	PPP# DU-3
4	PPP# DU-4

4. PRIMER CONNECTIONS @ TRAPS SHALL BE LOCATED ABOVE TRAP WATER SEAL & TRAP OUTLET WEIR. PRIMER CONNECTIONS SHALL NOT BE MADE TO TRAP FLUSHING INLETS.
5. PRIMER SUPPLIES TO TRAPS WHICH ARE EMBEDDED IN, OR BURIED BELOW CONCRETE SLABS SHALL BE ANNEALED (SOFT) COPPER TUBE, TYPE "K" WITH FLARED OR COMPRESSION FITTING (SOLDER JOINTS NOT PERMITTED). PRIMER SUPPLIES LOCATED ABOVE SLABS ON GRADE SHALL BE DRAWN (HARD) COPPER TUBE OF THE TYPE SPECIFIED FOR THIS PROJECT.
6. SUPPLY TUBE(S) SHALL BE PPP, INC. #SS-8 FOR 2, 3, OR 4 F.D.'S.
7. ALL LINES FROM DISTRIBUTION UNIT(S) TO F.D.'S MUST PITCH TO F.D.
8. UPON COMPLETION OF THE INSTALLATION, ADJUST TRAP PRIMER VALVE TO ENSURE PROPER OPERATION, AND VERIFY FLOW TO ALL CONNECTED TRAPS.

ELECTRONIC TRAP PRIMER DETAIL (N.T.S.) **6**

STANDPIPE DRAIN DETAIL (N.T.S.) **3**

Zoning: CanningK **11/13/2024**

Building&Safety: OCPWAzarvandB **12/22/2025**

Permits: BNR21-0246, ELE21-0853, MEC21-0514, PLB21-0900

County of Orange - OC Public Works
OC Development Services
APPROVED

This set of plans and specifications must be kept on the job at all times. It is unlawful to make any changes or alterations to these plans without written permission from OC Public Works, OC Development Services of Orange County. The stamping of these plan specifications SHALL NOT be held to permit or be an approval of the violation of any provisions of any County Ordinance or State law.

Hind Tshetshasee
BUILDING OFFICIAL

SMSARCHITECTS
100 Progress #250
Irvine, California 92618
949.757.3240 | www.sms-arch.com

CONSTANT
LINWOOD ENGINEERING INC
230 dupont drive, suite 150
irvine, ca 92602 • 714.424.0003
www.linwoodengineering.com

DANA POINT HARBOR PARTNERS

PROJECT NAME
DANA POINT HARBOR COMMERCIAL CORE
BUILDING 12
1290 HARBOR WAY
DANA POINT, CA 92629

CLIENT
BWP BURNHAM|WARD PROPERTIES

No.	DATE	ISSUE
	06/01/2021	COUNTY SUBMITTAL
	09/24/2021	COUNTY RESUBMITTAL
	02/10/2023	100% DESIGN DEVELOPMENT
	03/03/2023	50% CD PROGRESS SET
	04/21/2023	COUNTY RESUBMITTAL
A	07/24/2023	CITY RESUBMITTAL

DRAWINGS AND WRITTEN MATERIAL APPEARING HEREIN CONSTITUTE ORIGINAL AND UNPUBLISHED WORK OF SMS ARCHITECTS AND MAY NOT BE DUPLICATED, USED OR DISCLOSED WITHOUT WRITTEN CONSENT OF THE ARCHITECT

PROJECT NO. 19019-12

DATE FEBRUARY 10, 2023

DRAWING TITLE
PLUMBING DETAILS AND SCHEDULES

DRAWING NO.
P3.1.1

BIM 360://19274 Dana Point Harbor Revitalization_R21/19274 MEP Dana Point - Bldg 12 R21.rvt

7/28/2023 12:42:33 PM

DOMESTIC WATER CALCULATIONS

SHELL ONLY - NO OCCUPANCY

BASED ON CPC 610 AND CPC APPENDIX A

BUILDING 12

STREET SERVICE:	AVAILABLE STATIC PRESSURE AT CITY MAIN:	63 PSI
LOSSES:	FRICTION LOSS IN MAIN METER:	5 PSI
	FRICTION LOSS IN MAIN BFP:	13 PSI
	ELEVATION RISE LOSS: (25 FEET AT .434/FT)	11 PSI
	MINIMUM PRESSURE REQUIRED AT FIXTURES:	25 PSI
	AVAILABLE PRESSURE FOR FRICTION LOSS:	9 PSI
	TOTAL DEVELOPED LENGTH:	275 FT
	AVAILABLE FRICTION LOSS PER 100 FT OF PIPING:	3.3 PSI
	MAX FLUSH VALVE WSFUS, 2" LINE:	69

WATER AND WASTE SERVICE CALCULATIONS

JOB NAME: BUILDING 12 RESTROOM

FIXTURE TYPE	NO.	WASTE FU	WASTE TOTAL	COLD WATER FU	COLD WATER TOTAL	HOT WATER FU	HOT WATER TOTAL	TOTAL FU
LAVATORY (SINGLE)	4	1	4	0.75	3	0.75	3	4
SERVICE SINK	1	3	3	3	3	3	3	4
FLOOR DRAIN	2	0	0	0	0	0	0	0
HUB DRAIN	1	8	8	0	0	0	0	0
SHOWER	1	2	2	2	2	2	2	3
URINAL, 0.125 GPF	1	2	2	4	4	0	0	4
WATER CLOSET, 1.28 FV	3	4	12	5	15	0	0	15
TOTAL FU			31.0		27.00		8.00	30

POTABLE WATER PIPE SCHEDULE

NOMINAL TUBING SIZE	COLD WATER PIPING – EQUIVALENT WSFU'S – FLUSH TANK	COLD WATER PIPING – EQUIVALENT WSFU'S – FLUSH VALVE	HOT WATER PIPING – EQUIVALENT WSFU'S	HOT WATER PIPING – REFER TO NOTE
1/2"	0	0	0	1
3/4"	6	0	6	
1"	13	0	13	
1-1/4"	24	0	24	
1-1/2"	49	11	46	
2"	165	69	119	

NOTES:
1. 1/2" NOMINAL TUBING SIZE IS FOR FIXTURE CONNECTIONS ONLY AND SHALL NOT BE USED FOR BRANCH PIPING.
2. SIZING BASED ON FRICTION LOSS OF 3.2 PSI PER 100 FEET.
3. GPM AND WSFU'S LIMITED BY 8.0 FPS VELOCITY FOR COLD WATER
4. GPM AND WSFU'S LIMITED BY 5.0 FPS VELOCITY FOR HOT WATER
5. INSIDE POTABLE WATER SUPPLY PIPING SHALL BE OF TYPE "L" COPPER.

LOW PRESSURE GAS PIPE SIZE SCHEDULE

NOMINAL PIPE SIZE (IN.)	CAPACITY (CFH)
1/2	34
3/4	71
1	134
1 1/4	275
1 1/2	412
2	794
2 1/2	1,270
3	2,240
4	4,560
5	8,260
6	13,400
8	27,500
10	49,900
12	79,000

NOTES:
1. BASED ON 2022 CALIFORNIA PLUMBING CODE TABLE 1215.2(1), TOTAL DEVELOPED LENGTH = 200 FT.

MED PRESSURE (5 PSI) GAS PIPE SIZE SCHEDULE

NOMINAL PIPE SIZE (IN.)	CAPACITY (CFH)
1/2	673
3/4	1,360
1	2,490
1 1/4	5,100
1 1/2	7,650
2	14 700
2 1/2	23 500
3	41 500
4	84 700
5	N/A
6	N/A
8	N/A
10	N/A
12	N/A

NOTES:
1. BASED ON 2022 CALIFORNIA PLUMBING CODE TABLE 1215.2(6), TOTAL DEVELOPED LENGTH = 200 FT.

FIXTURE SPECIFICATIONS

RD-1: ROOF DRAIN - ZURN MODEL #ZC100-C-R-VP, DURA-COATED CAST IRON BODY WITH CAST IRON DOME. COMPLETE WITH UNDERDECK CLAMP, ROOF SUMP RECEIVER, AND VANDAL-PROOF SECURED TOP.
SPECIFY NO-HUB OUTLET OF SIZE SPECIFIED ON PLUMBING PLANS.

OD-1: OVERFLOW DRAIN - ZURN MODEL #ZC100-89-C-R-VP, DURA-COATED CAST IRON BODY WITH CAST IRON DOME. COMPLETE WITH UNDERDECK CLAMP, 2" HIGH WATER DAM, ROOF SUMP RECEIVER, AND VANDAL-PROOF SECURED TOP.
SPECIFY NO-HUB OUTLET OF SIZE SPECIFIED ON PLUMBING PLANS.

WC-1: ELONGATED FLUSH VALVE WATER CLOSET
TOTO CT708UVG WALL MOUNT SIPHON JET FLUSH VITREOUS CHINA WATER CLOSET WITH 1-1/2" BACK SPUD, CEFIONTECT CERAMIC GLAZE, AND SENSOR-OPERATED 1.28 GPF FLUSH VALVE. PROVIDE WITH TOTO TET2LA31#SS ECOPOWER FLUSH VALVE. MOUNT AT ADA HEIGHT.

UR-1: WALL HUNG URINAL
TOTO UT105UVG HIGH EFFICIENCY WASHOUT FLUSH ACTION VITREOUS CHINA URINAL WITH 3/4" BACK SPUD, CEFIONTECT CERAMIC GLAZE, AND SENSOR-OPERATED 0.125 GPF FLUSH VALVE. PROVIDE WITH TOTO TEU2UA11#SS ECOPOWER FLUSH VALVE. MOUNT AT ADA HEIGHT.

L-1: UNDERMOUNT LAVATORY
KOHLER "VERTICYL RECTANGLE" K-2882 VITREOUS CHINA UNDERMOUNT LAVATORY WITH MOUNTING KIT. PROVIDE SLOAN EBF-615-4-BAT-BDM-CP-0.35GPM-MLM-IR-FCT 0.175 GALLON PER CYCLE METERING LAVATORY FAUCET. PROVIDE 1-1/4" ADJUSTABLE TRAP BY KOHLER, ANGLE STOPS BY BRASSCRAFT, AND FLEX SUPPLIES. PROVIDE INSULATION TO COVER WATER, TRAP AND DRAIN PIPING. INSTALL AT ADA MOUNTING HEIGHT.

MS-1: MOP SINK
36"X24" MOP BASIN BY FIAT OR EQUAL. PROVIDE WITH 3" CHROME PLATED GRID DRAIN, T&S BRASS #B-0665-BSTP CHROME PLATED WALL MOUNTED FAUCET WITH INTEGRAL VACUUM BREAKER, ADJUSTABLE WALL BRACE, PAIL HOOK AND HOSE THREADED OUTLET.

FD-1: FLOOR DRAIN
JAY R. SMITH #2005 FLOOR DRAIN WITH 2" NO-HUB OUTLET AND 5" ROUND NICKEL BRONZE STRAINER HEAD. PROVIDE WITH TRAP PRIMER CONNECTION.

DD-1: DECK DRAIN
MIFAB F1100-ZS CAST IRON AREA DRAIN WITH REINFORCED 6" X 6" SQUARE STRAINER & NO-HUB OUTLET.

HB-1: HOSE BIBB
MIFAB HY-3500-NPB ENCASED LOW LEAD MODERATE CLIMATE WALL HYDRANT WITH VACUUM BREAKER AND KEY LOCK DOOR.

HB-2: ROOF HYDRANT
MIFAB MHY-58 SELF-DRAINING, NON-FREEZE ROOF HYDRANT WITH WITH 3/4" MALE HOSE CONNECTION. HEAVY DUTY CAST IRON HEAD WITH LIFT HANDLE.

TP: TRAP PRIMER
PPP, INC #P1-500 OR #P2-500 TRAP SEAL PRIMER. SEE DETAIL FOR MORE MODEL NUMBERS AND DISTRIBUTION UNIT INFORMATION.

ETP: ELECTRONIC TRAP PRIMER - PPP, INC #MP-500-115V ELECTRONIC TRAP SEAL PRIMER WITH AIR GAP, DISTRIBUTION UNIT W/ 1-4 OPENING PORTS, AND 120 VAC CONTROL UNIT. INSTALL COMPLETE W/ SHUT-OFF VALVE, AND 1/2" TYPE L COPPER DRAIN LINE FROM TRAP SEAL PRIMER OUTLET TO RECEPTOR CONNECTION POINT. SEE DETAIL ON DRAWING P3.1 FOR MORE INFORMATION.

WCO: JAY R. SMITH #4402, INSTALLED +18" AFF
FCO: JAY R. SMITH #4020, INSTALLED FLUSH WITH FLOOR
DPCO: JAY R. SMITH #4220, INSTALLED FLUSH WITH GRADE

WATER HAMMER ARRESTOR :
WATER HAMMER ARRESTOR BY WATTS REGULATOR OR APPROVED EQUAL. PROVIDE AT END OF ALL BRANCHES.

SCHEDULE OF ELECTRIC WATER HEATERS

TAG	MAKE & MODEL	TANK CAP. / GAL.	KW RATING	ELECTRICAL RATING	RECOVERY @ 60°F RISE	WATER INLET	WATER OUTLET	DIMENSIONS DIA. X H	REMARKS
WH-1	AO SMITH DURA-POWER #DEL-20, SINGLE 6.0 KW ELEMENT	20 GAL	6.0	480/1/60	41 GPH	3/4"	3/4"	21-3/4"X22-1/4"	SEE NOTES 1, 2, 3

NOTES:
1. JUNCTION BOX & BRANCH CIRCUIT WIRING SHALL BE FURNISHED AND INSTALLED BY ELEC. CONTRACTOR.
2. CONTRACTOR TO SET OUTLET TEMPERATURE TO 120° F.
3. ELEMENT SHALL BE CONTOLLED BY AN INDIVIDUALLY MOUNTED THERMOSTAT AND HIGH TEMPERATURE CUTOFF SWITCH.

SCHEDULE OF EXPANSION TANKS

TAG	TYPE	MANUFACTURER/MODEL NO.	VOLUME (GAL.)	HEIGHT (INCHES)	DIAMETER (INCHES)	WEIGHT (LBS.)	WATER CONNECTION (N.P.T.)	MOUNTING TYPE	REMARKS
ET-1	DIAPHRAGM	AMTROL "THERM-X-TROL" #ST-5C	2.0	14"	8"	10	3/4"	WALL	SEE NOTES 1, 2, 3

NOTES:
1. EXPANSION TANK SHALL BE FABRICATED OF CARBON STEEL WITH POLYPROPYLENE LINER AND HEAVY DUTY, BUTYL RUBBER DIAPHRAM.
2. EXPANSION TANK SHALL BE SUITABLE FOR USE IN POTABLE WATER SYSTEMS.
3. PROVIDE THE MANUFACTURER'S PRINTED SIZING INSTRUCTIONS ON THE THERMAL EXPANSION TANK.

GREASE INTERCEPTOR SCHEDULE (SHELL ONLY- NO OCCUPANCY)

TAG	LOCATION	MANUFACTURER MODEL NO.	SIZE (L X W X H)	VOLUME (GALLONS)	SERVICE	CAPACITY PER CPC	NOTES
GI-12	SEE SHEET A1.0.1	JENSEN PRECAST JP1500ECE-G	10'-8" X 5'-10" X 6'-3"	1,500	BUILDING 12	172 DFU	1,2,3

NOTES:
1. INSTALL PER MANUFACTURER'S INSTALLATION INSTRUCTIONS.
2. HEIGHT WILL VARY WITH RISERS. SEE SPECIFICATION SHEET FOR MORE INFO.
3. PROVIDE SAMPLE BOX PER JENSEN PRECAST SPECIFICATIONS AND DETAILS ON THIS DRAWING.

SCHEDULE OF NEW PLUMBING FIXTURES

FIXTURE TAG	TRAP	WASTE	VENT	C.W.	H.W.	GPM GPF	FLOOD RIM (A.F.F.)
RD-1	---	SEE PLANS	---	---	---	---	AT ROOF
OD-1	---	SEE PLANS	---	---	---	---	AT ROOF
WC-1	INT.	3"	2"	1-1/2"	---	1.28 GPF	SEE ARCH.
UR-1	INT.	2"	1-1/2"	3/4"	---	0.125 GPF	SEE ARCH.
L-1	1-1/2"	1-1/2"	1-1/2"	1/2"	1/2"	0.175 GPC	SEE ARCH.
MS-1	3"	3"	1-1/2"	1/2"	1/2"	2.0 GPM	APPROX. 2'-10"
FD-1	2"	2"	1 1/2"	THRU TP	---	---	FLUSH
DD-1	---	SEE PLANS	---	---	---	---	FLUSH
HB-1,2	---	---	---	3/4"	---	2.5 GPM	---
TP / ETP	---	---	---	1/2"	---	---	---
WCO FCO / DPCO	---	SEE PLANS	---	---	---	---	18" AFF FLUSH

(FIXTURE CONNECTIONS (VALVE INLET): TRAP, WASTE, VENT, C.W., H.W.)

ROOF DRAIN SIZING TABLE

BASED ON CPC TABLES 1103.1, 1103.2.

IN DANA POINT, CA, DESIGN RAINFALL RATE IS 3.0 INCHES PER HOUR (FOR 100 YR, 60 MIN. RAINFALL)

PROJECTED AREAS ALLOWED FOR PIPE SIZES:

	3"	4"	6"	8"	10"
DRAINS & VERTICAL PIPING	2,930 FT²	6,130 FT²	17,995 FT²	38,660 FT²	N/A
HORIZ. PIPING 1/8" PER FOOT SLOPE	1,096 FT²	2,506 FT²	7,133 FT²	15,330 FT²	27,600 FT²

MODEL JP1500ECE-G
LISTED BY UPC ®

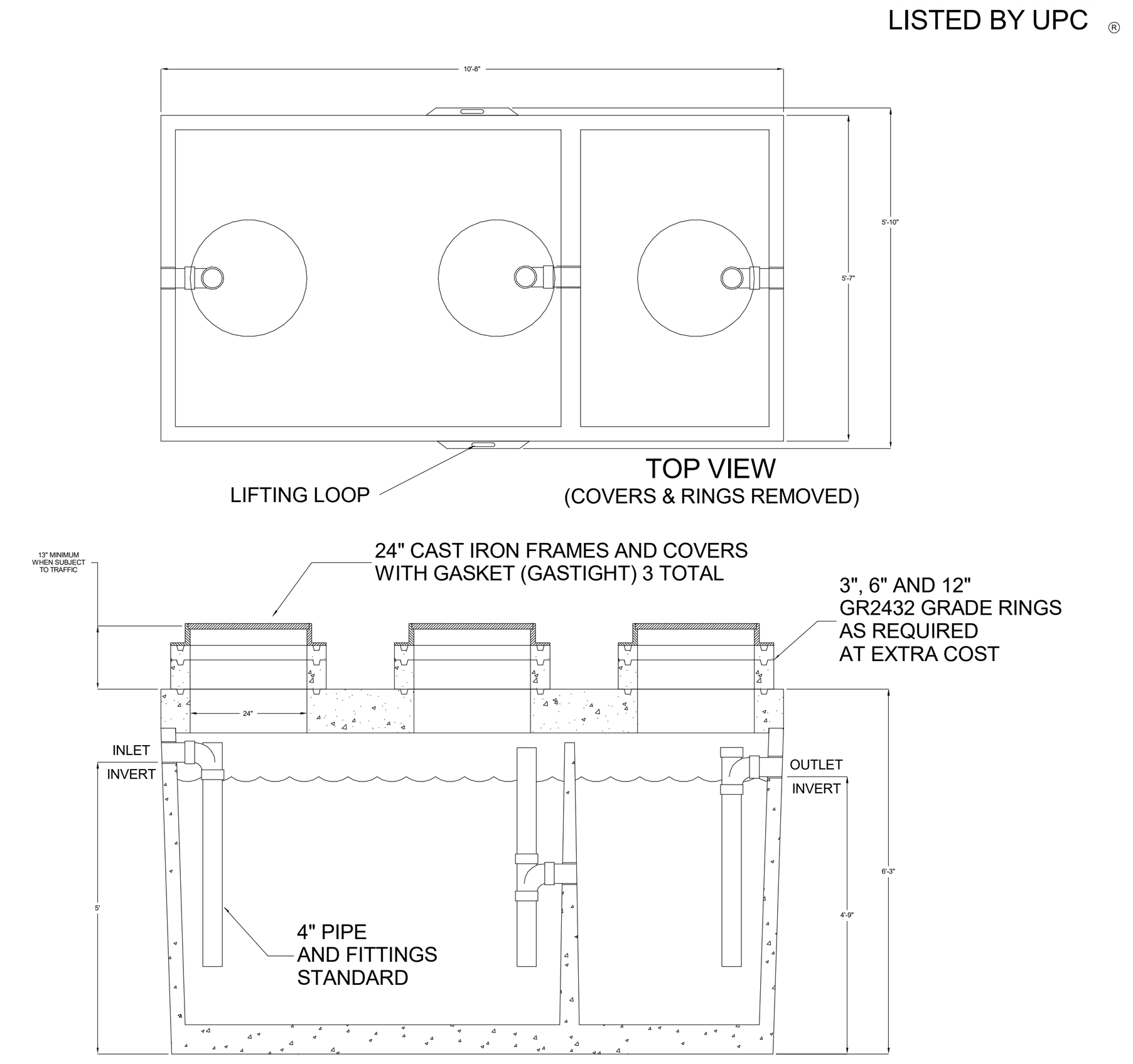

OPERATING CAPACITY: 1,500 GALLONS.
(1,500 OR LARGER TANKS ARE REQUIRED BY THE CITY OF SAN DIEGO.)

DESIGN LOAD: H-20 TRAFFIC WITH DRY SOIL CONDITIONS (WATER LEVEL BELOW TANK) AND 13 INCHES TO 6 FEET EARTH COVER.

SUITABLE SUB-BASE BEDDED WITH GRANULAR MATERIAL SHALL BE PREPARED TO HANDLE ANTICIPATED LOADS.

FOR COMPLETE DESIGN AND PRODUCT INFORMATION CONTACT JENSEN PRECAST.

5/12/11
BUILDING 12 PLUMBING_P3.1.2.DWG
© 2011 Jensen Precast

Jensen Precast reserves the right to make changes to product design and/or dimensions without notice. Please contact Jensen Precast whenever necessary for confirmation or advice on product design.

JENSEN PRECAST

1,500 GAL GREASE INTERCEPTOR DETAIL (N.T.S.) **13**

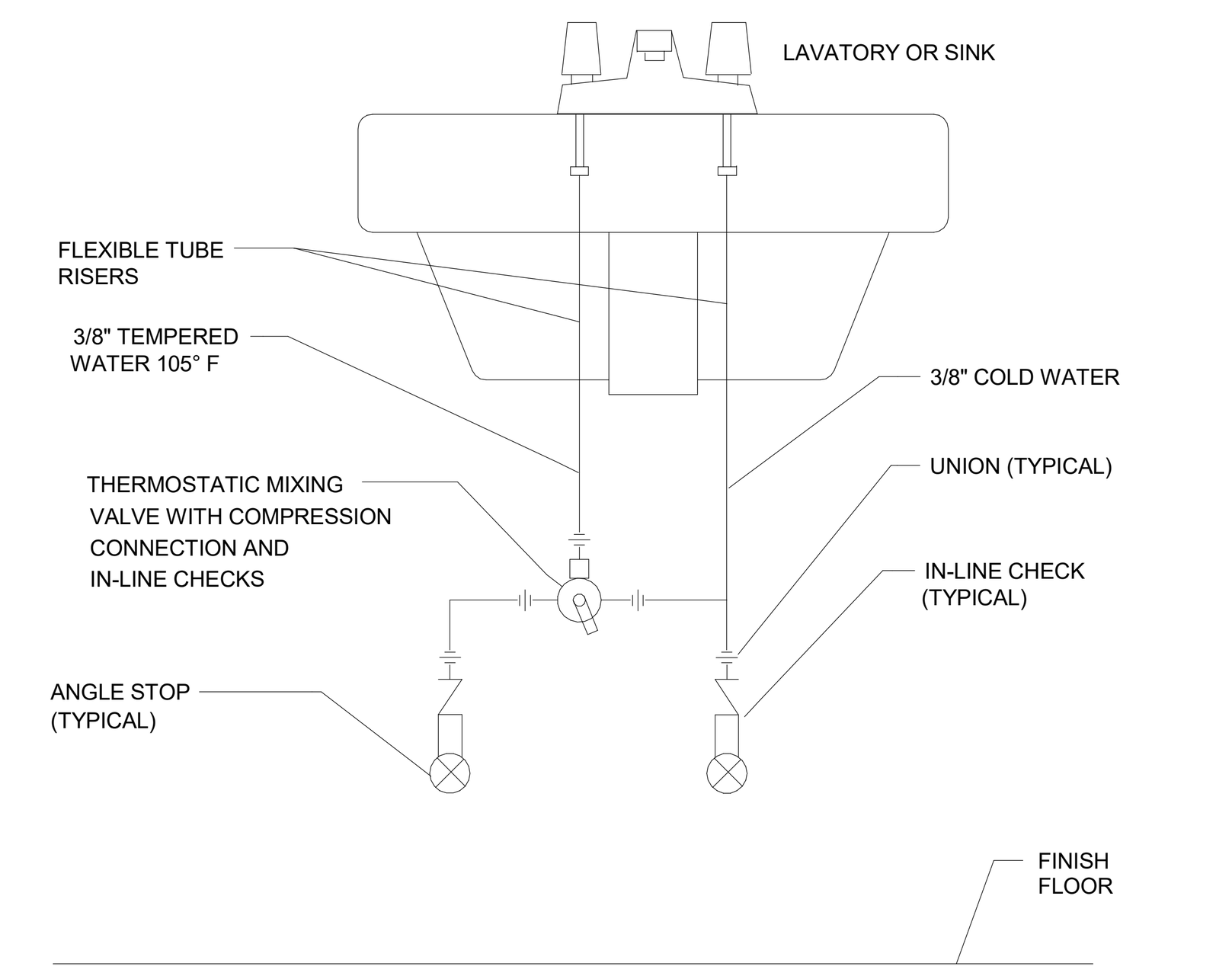

MIXING VALVE DETAIL (N.T.S.) **10**

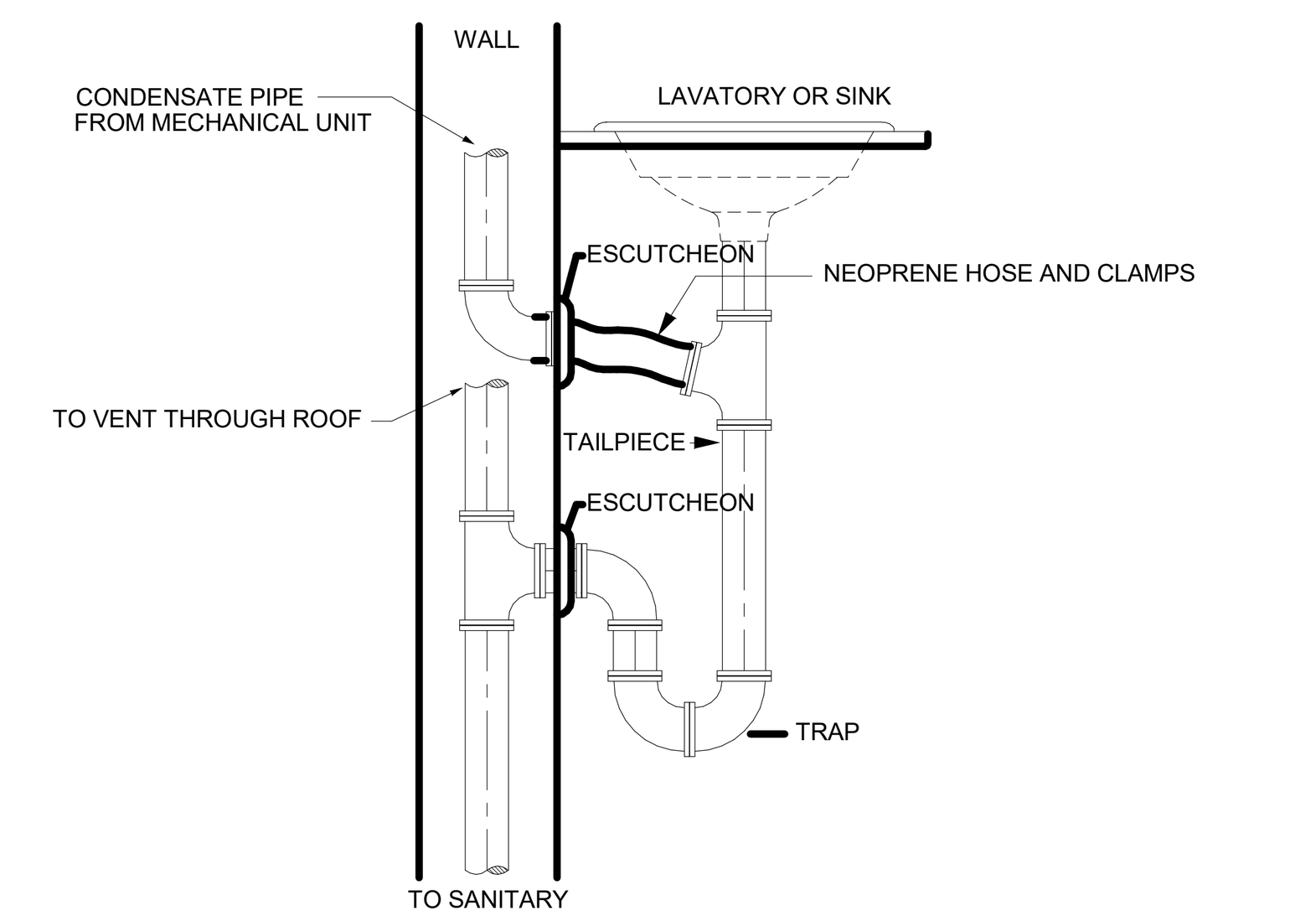

NOTE: PIPE SIZES ARE AS NOTED ON THE PLANS

CONDENSATE TAILPIECE DETAIL (N.T.S.) **11**

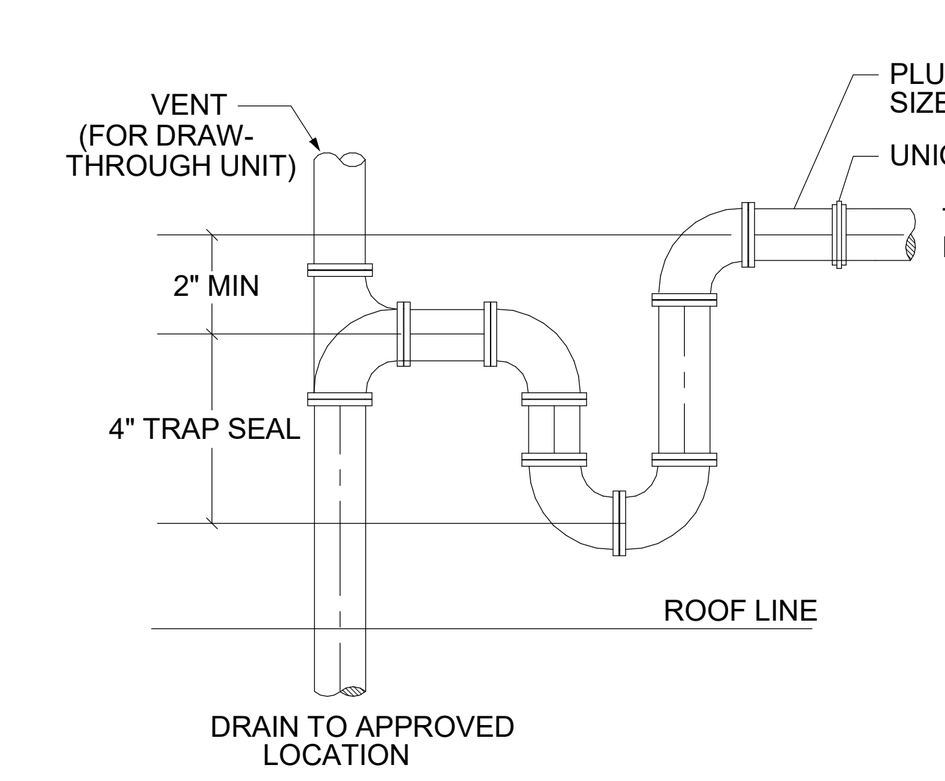

MINIMUM CONDENSATE DRAIN SIZE PER CPC TABLE 8-2

TONS REFER	NOM. PIPE SIZE
0 - 20	3/4"
21 - 40	1"
41 - 90	1 1/4"
91 - 125	1 1/2"
126 - 250	2"

CONDENSATE DRAIN TRAP DETAIL (N.T.S.) **12**

Zoning: CanningK 11/13/2024

Building&Safety: OCPWAzarvandB 12/22/2025

Permits: BNR21-0246, ELE21-0853, MEC21-0514, PLB21-0900

County of Orange - OC Public Works
OC Development Services
APPROVED
This set of plans and specifications must be kept on the job at all times. It is unlawful to make any changes or alterations to these plans without written permission from OC Public Works, OC Development Services of Orange County. The stamping of these plan specifications SHALL NOT be held to permit or be an approval of the violation of any provisions of any County Ordinance or State law.
Hadi Tabatabaee
BUILDING OFFICIAL

CITY OF DANA POINT
PLANNING DIVISION
This plan has been reviewed for ZONING ONLY and meets the requirements of Title 9 of the Dana Point Municipal Code.
APPROVED KBN
DATE 10/21/24
COMMENTS BUILDING 12 (OC PERMIT PKG21-0516) PER CDP13-0018(I).

SMSARCHITECTS
100 Progress #250
Irvine, California 92618
949.757.3240 | www.sms-arch.com

CONSTANT
LINWOOD ENGINEERING INC
2301 dupont drive, suite 150
irvine, ca 92612 • 714.424.0001
www.linwoodengineering.com

DANA POINT HARBOR PARTNERS

PROJECT NAME: DANA POINT HARBOR COMMERCIAL CORE
BUILDING 12
1290 HARBOR WAY
DANA POINT, CA 92629

CLIENT: BWP BURNHAM|WARD PROPERTIES

No.	DATE	ISSUE
	06/01/2021	COUNTY SUBMITTAL
	09/24/2021	COUNTY RESUBMITTAL
	02/10/2023	100% DESIGN DEVELOPMENT
	03/03/2023	50% CD PROGRESS SET
	04/21/2023	COUNTY RESUBMITTAL
A	07/24/2023	CITY RESUBMITTAL

DRAWINGS AND WRITTEN MATERIAL APPEARING HEREIN CONSTITUTE ORIGINAL AND UNPUBLISHED WORK OF SMS ARCHITECTS AND MAY NOT BE DUPLICATED, USED OR DISCLOSED WITHOUT WRITTEN CONSENT OF THE ARCHITECT

PROJECT NO. 19019-12
DATE FEBRUARY 10, 2023
DRAWING TITLE
PLUMBING DETAILS AND SCHEDULES

DRAWING NO.
P3.1.2

CITY OF DANA POINT
PLANNING DIVISION

This plan has been reviewed for ZONING ONLY and meets the requirements of Title 9 of the Dana Point Municipal Code.

APPROVED KBN

DATE 10/21/24

COMMENTS BUILDING 12 (OC PERMIT PKG21-0516) PER CDP13-0018(1).

Zoning: CanningK 11/13/2024

Building&Safety: OCPWAzarvandB 12/22/2025

Permits: BNR21-0246, ELE21-0853, MEC21-0514, PLB21-0900

County of Orange - OC Public Works
OC Development Services
APPROVED

This set of plans and specifications must be kept on the job at all times. It is unlawful to make any changes or alterations to these plans without written permission from OC Public Works, OC Development Services of Orange County. The stamping of these plan specifications SHALL NOT be held to permit or be an approval of the violation of any provisions of any County Ordinance or State law.

Hadi Tabatabaee
BUILDING OFFICIAL

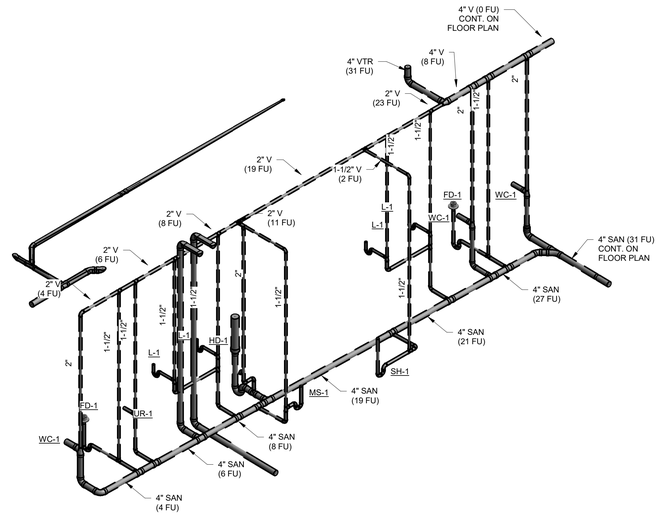

1 RESTROOM ISOMETRIC DIAGRAM - SANITARY

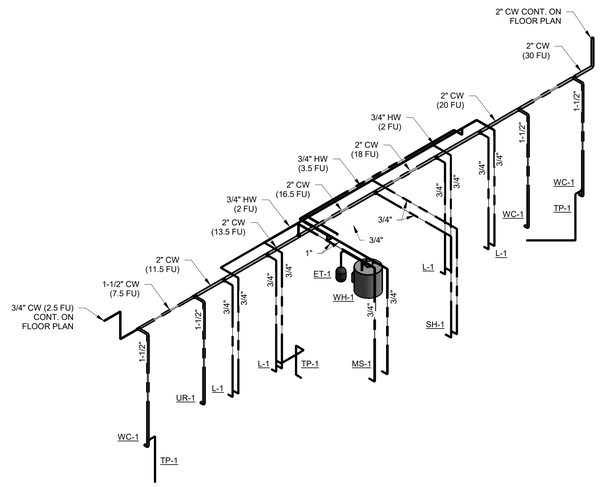

2 RESTROOM ISOMETRIC DIAGRAM - DOMESTIC

SMSARCHITECTS
100 Progress #250
Irvine, California 92618
949.757.3240 | www.sms-arch.com

CONSTANT
LINWOOD ENGINEERING INC
2301 dupont drive, suite 150
irvine, ca 92612 • 714.424.0001
www.linwoodengineering.com

DANA POINT HARBOR PARTNERS

PROJECT NAME
DANA POINT HARBOR COMMERCIAL CORE
BUILDING 12
1290 HARBOR WAY
DANA POINT, CA 92629

CLIENT
BWP BURNHAM|WARD PROPERTIES

No.	DATE	ISSUE
	06/01/2021	COUNTY SUBMITTAL
	09/24/2021	COUNTY RESUBMITTAL
	02/10/2023	100% DESIGN DEVELOPMENT
	03/03/2023	50% CD PROGRESS SET
	04/21/2023	COUNTY RESUBMITTAL
A	07/24/2023	CITY RESUBMITTAL

DRAWINGS AND WRITTEN MATERIAL APPEARING HEREIN CONSTITUTE ORIGINAL AND UNPUBLISHED WORK OF SMS ARCHITECTS AND MAY NOT BE DUPLICATED, USED OR DISCLOSED WITHOUT WRITTEN CONSENT OF THE ARCHITECT

PROJECT NO 19019-12

DATE FEBRUARY 10, 2023

DRAWING TITLE
RESTROOM ISOMETRIC DIAGRAMS

DRAWING NO
P4.1.1

7/28/2023 12:42:35 PM

BIM 360://19274 Dana Point Harbor Revitalization_R21/19274 MEP Dana Point - Bldg 12 R21.rvt

CAL GREEN GENERAL NOTES

PART 1 - GENERAL
1.01 DESCRIPTION
A. GENERAL CONTRACTOR SHALL SELECT A COMMISSIONING AUTHORITY.
1.02 SCOPE
A. COMMISSIONED SYSTEMS
1. POWER DISTRIBUTION SYSTEM
2. LIGHTING AND LIGHTING CONTROL SYSTEM
3. EMERGENCY EGRESS LIGHTING
1.03 RESPONSIBILITIES
1. CONSTRUCTION AND ACCEPTANCE PHASES
(A) THE COMMISSIONING AGENT MAY REQUEST FURTHER DOCUMENTATION NECESSARY FOR THE COMMISSIONING PROCESS.
(1) PROVIDE A COPY OF THE O&M MANUALS SUBMITTALS OF COMMISSIONED EQUIPMENT, THROUGH NORMAL CHANNELS AFTER REVIEW OR APPROVAL BY THE A/E TEAM, TO THE CA FOR REVIEW.
(2) CONTRACTOR IS TO CREATE AND PROVIDE FIELD INSTALLATION VERIFICATION (FIV) CHECK SHEETS FROM MANUFACTURER'S INSTALLATION INSTRUCTIONS. THE CHECK SHEETS SHALL BE REVIEWED AND APPROVED BY THE CA. IF NO INSTRUCTIONS ARE AVAILABLE OR THE CONTRACTOR'S CREATED FORMS ARE INADEQUATE, THE CA MAY PROVIDE THE CHECK SHEETS TO THE CONTRACTOR.
(3) THE COMMISSIONING AGENT SHALL SUPERVISE THE CONTRACTORS PERFORM THE FIV INSPECTIONS. AFTER COMPLETION THE CONTRACTOR SHALL FORWARD THE COMPLETED CHECK SHEETS TO THE CA FOR APPROVAL.
(4) PRIOR TO ENERGIZING ANY SYSTEM, THE CONTRACTOR SHALL COORDINATE ANY REQUIRED SPECIAL SYSTEMS INSPECTION BY THE ENGINEER OF RECORD. A COPY OF SPECIAL SYSTEM ELECTRICAL INSPECTION REPORTS SHALL BE PROVIDED TO THE CA.
(5) PREPARE O&M MANUALS ACCORDING TO THE CONTRACT DOCUMENTS.
(6) DURING CONSTRUCTION, MAINTAIN AS-BUILT RED-LINE DRAWINGS FOR DRAWINGS AND FINAL CAD AS-BUILT FOR CONTRACTOR-GENERATED COORDINATION DRAWINGS. UPDATE AFTER COMPLETION OF COMMISSIONING (EXCLUDING DEFERRED TESTING). PREPARE RED-LINE AS-BUILT DRAWINGS FOR DRAWINGS AND FINAL AS-BUILT FOR CONTRACTOR-GENERATED COORDINATION DRAWINGS.
(7) PROVIDE TRAINING OF THE OWNER'S OPERATING PERSONNEL AS SPECIFIED.
(8) COORDINATE WITH EQUIPMENT MANUFACTURERS TO DETERMINE SPECIFIC REQUIREMENTS TO MAINTAIN THE VALIDITY OF THE WARRANTY.

PART 2 - PRODUCTS
2.01 TEST EQUIPMENT
A. CONTRACTOR SHALL PROVIDE ALL TEST EQUIPMENT NECESSARY TO FULFILL THE TESTING REQUIREMENTS OF THIS SECTION.

PART 3 - EXECUTION
3.01 SUBMITTALS
A. CONTRACTOR SHALL PROVIDE SUBMITTAL DOCUMENTATION RELATIVE TO PRE-COMMISSIONING AND COMMISSIONING:
3.02 PRE-COMMISSIONING
A. PRE-COMMISSIONING FIV SHALL INCLUDE BUT NOT LIMITED TO THE FOLLOWING:
1. INSPECT DISTRIBUTION BOARDS, PANELBOARDS, DISCONNECT SWITCHES, CONTROLLERS, AND CABINETS ARE SECURELY MOUNTED TO WITHSTAND SEISMIC ZONE 4 IN ACCORDANCE WITH CALIFORNIA BUILDING CODE.
2. VERIFY PROPER NAMEPLATES PROVIDED ON EQUIPMENT, PANELBOARDS, RELAY CABINETS, CONTROL CABINETS, DISCONNECT SWITCHES, AND CONTROLLERS.
3. INSPECT RACEWAYS (RIGID STEEL CONDUIT, EMT, FLEXIBLE METAL CONDUIT AND LIQUIDTIGHT FLEXIBLE CONDUIT) ARE SECURELY FASTEN PER 2010 CEC AND WITHSTAND SEISMIC ZONE 4 IN ACCORDANCE WITH CALIFORNIA BUILDING CODE.
4. VERIFY THAT CONDUIT ARE INSTALLED PER SPECIFICATIONS.
5. VERIFY WIRING INSIDE THE BOXES, EQUIPMENT AND PANELBOARDS ARE NEATLY TRAIN AND LACED.
6. VERIFY PROPER HEIGHT OF INSTALLATION FOR RECEPTACLES, LIGHT SWITCHES, DEVICES, JUNCTION BOXES AND PULL BOXES.
7. VERIFY CIRCUIT DESIGNATIONS LABELS ARE PROVIDED ON CONDUCTORS AT PANELBOARDS, JUNCTION BOXES, PULL BOXES, AND DEVICE BOXES.
8. INSPECT LIGHT FIXTURES ARE SEISMICALLY SUPPORTED.
9. INSPECT LIGHT FIXTURES FOR ANY DAMAGE OR DEFECTIVE LAMPS.
10. ENSURE EMERGENCY LIGHT FIXTURES HAVE TEST SWITCH AVAILABLE.
11. VERIFY PANELBOARDS DIRECTORIES ARE ACCURATE, DATED AND TYPE WRITTEN.
12. VERIFY THAT OCCUPANCY SENSORS ARE SET TO MAXIMUM SENSITIVITY AND SPECIFIED DELAY.
3.03 COMMISSIONING
A. COMMISSIONING FIV SHALL INCLUDE BUT NOT LIMITED TO THE FOLLOWING:
1. RECORD EMERGENCY FOOT-CANDLE LEVEL IN EACH AREA AND COMPARE TO DESIGN DOCUMENTS
2. VERIFY MINIMUM OF FOOT-CANDLE OF ILLUMINATION ON EMERGENCY EGRESS PATHWAY LIGHTING.
3. SIMULATE NORMAL POWER LOSS TO ENSURE AUTOMATIC EMERGENCY POWER TRANSFER AND EMERGENCY LIGHTING ARE OPERATIONAL.
4. TEST SHUNT TRIP DEVICES TO ENSURE PROPER OPERATION.
5. TEST AND VALIDATE CONTROL AND SEQUENCE OF OPERATION AS SPECIFIED ON THE PLANS. FOR LIGHTING, HVAC CONTROL.
6. VERIFY PROPER OPERATION OF PHOTOVOLTAIC SYSTEM.
3.04 START UP
A. THE ELECTRICAL CONTRACTOR OR HIS ELECTRICAL TESTING AGENCY SHALL FOLLOW THE START UP AND INITIAL CHECKOUT PROCEDURES LISTED IN THE RESPONSIBILITIES LIST IN THIS SECTION. CONTRACTOR HAS START UP RESPONSIBILITY AND IS REQUIRED TO COMPLETE SYSTEMS AND SUB-SYSTEMS SO THEY ARE FULLY FUNCTIONAL, MEETING THE DESIGN OBJECTIVES OF THE CONTRACT DOCUMENTS. THE COMMISSIONING PROCEDURES AND FUNCTIONAL TESTING DO NOT RELIEVE OR LESSEN THIS RESPONSIBILITY OR SHIFT THAT RESPONSIBILITY PARTIALLY TO THE COMMISSIONING AGENT OR OWNER.
B. FUNCTIONAL TESTING IS INTENDED TO BEGIN AFTER COMPLETION OF THE FIELD INSTALLATION VERIFICATIONS AND OPERATIONAL PERFORMANCE TESTS. FUNCTIONAL TESTING SHALL NOT PROCEED PRIOR TO THE COMPLETION OF SYSTEMS OR SUB-SYSTEMS.
3.05 FUNCTIONAL PERFORMANCE TESTS
A. EACH SYSTEM PROVIDED UNDER THIS CONTRACT AND COVERED BY THIS SECTION SHALL BE FUNCTION TESTED TO ENSURE TOTAL SYSTEM OPERATION. THIS FUNCTIONAL TESTING SHALL BE SUPERVISED BY THE COMMISSIONING AGENT AND THE CONTRACTOR SHALL ASSIST THE AGENT AS REQUIRED.
B. UPON SATISFACTORY COMPLETION OF EQUIPMENT ACCEPTANCE TESTS, THE SYSTEM FUNCTIONAL TESTS SHALL BE PERFORMED. IT IS THE INTENT OF SYSTEM FUNCTIONAL TESTS TO PROVE THE PROPER INTERACTION OF ALL SENSING, PROCESSING, AND ACTION DEVICES TO EFFECT THE DESIGNED END PRODUCT OR RESULT.
C. ALL INTERLOCKS, SAFETY DEVICES, FAIL-SAFE FUNCTIONS, AND DESIGN FUNCTIONS SHALL BE TESTED.
3.06 TESTING DOCUMENTATION AND APPROVALS
A. TEST REPORTS SHALL BE SUBMITTED TO COMMISSIONING AGENT FOR APPROVAL AND INCLUDED IN THE CLOSE OUT DOCUMENTS.
3.07 OPERATIONS AND MAINTENANCE (O&M) MANUALS
A. CONTRACTOR SHALL COMPILE AND PREPARE DOCUMENTATION FOR EQUIPMENT AND SYSTEMS AND DELIVER TO THE GC FOR INCLUSION IN THE O&M MANUALS.
3.08 TRAINING OF OWNER PERSONNEL
A. THE GC SHALL BE RESPONSIBLE FOR TRAINING COORDINATION AND SCHEDULING AND ULTIMATELY TO ENSURE THAT TRAINING IS COMPLETED.
B. THE CA SHALL BE RESPONSIBLE FOR OVERSEEING AND APPROVING THE CONTENT AND ADEQUACY OF THE TRAINING OF OWNER PERSONNEL FOR COMMISSIONED EQUIPMENT.
C. ELECTRICAL CONTRACTOR. THE ELECTRICAL CONTRACTOR SHALL HAVE THE FOLLOWING TRAINING RESPONSIBILITIES:
1. PROVIDE THE CA WITH A TRAINING PLAN TWO WEEKS BEFORE THE PLANNED TRAINING ACCORDING TO THE OUTLINE.
2. PROVIDE DESIGNATED OWNER PERSONNEL WITH COMPREHENSIVE TRAINING IN THE UNDERSTANDING OF THE SYSTEMS AND THE OPERATION AND MAINTENANCE OF EACH MAJOR PIECE OF COMMISSIONED ELECTRICAL EQUIPMENT OR SYSTEM.
3. TRAINING SHALL CONSIST OF HANDS-ON TRAINING ON EACH PIECE OF EQUIPMENT, WHICH SHALL ILLUSTRATE THE VARIOUS MODES OF OPERATION. EACH TRAINING SESSION SHALL INCLUDE:
A. A REVIEW OF THE WRITTEN O&M INSTRUCTIONS EMPHASIZING SAFE AND PROPER OPERATING REQUIREMENTS, PREVENTATIVE MAINTENANCE, SPECIAL TOOLS NEEDED, AND SPARE PARTS INVENTORY SUGGESTIONS.
B. THE TRAINING SHALL INCLUDE ENERGIZING, RE-ENERGIZING, START UP, OPERATION IN ALL MODES POSSIBLE, SHUT-DOWN, ALARM CONDITIONS, POWER FAILURE, AND ANY EMERGENCY PROCEDURES.
C. DISCUSS RELEVANT HEALTH AND SAFETY ISSUES AND CONCERNS.
D. DISCUSS WARRANTIES AND GUARANTEES.
E. COVER COMMON TROUBLESHOOTING PROBLEMS AND SOLUTIONS.
F. DURING ANY DEMONSTRATION SHOULD THE SYSTEM FAIL TO PERFORM IN ACCORDANCE WITH THE REQUIREMENTS OF THE O&M MANUAL OR SEQUENCE OF OPERATIONS, THE SYSTEM WILL BE REPAIRED OR ADJUSTED AS NECESSARY AND THE DEMONSTRATION REPEATED.
G. THE ELECTRICAL CONTRACTOR SHALL FULLY EXPLAIN AND DEMONSTRATE THE OPERATION, FUNCTION AND OVERRIDES OF ANY POWER MANAGEMENT OR LIGHTING CONTROL SYSTEM.
H. TRAINING SHALL OCCUR AFTER FUNCTIONAL TESTING IS COMPLETE, UNLESS APPROVED OTHERWISE BY THE PROJECT MANAGER.
3.09 CORRECTION OF DEFICIENCIES
A. ANY DEFICIENCIES FOUND SHALL BE RECTIFIED, AND WORK AFFECTED BY SUCH DEFICIENCIES SHALL BE COMPLETELY RE-TESTED AT THE CONTRACTOR'S EXPENSE. FINAL ACCEPTANCE OF THE ELECTRICAL POWER AND CONTROL SYSTEM IS CONTINGENT UPON
B. THE COMMISSIONING AUTHORITY (CA) DIRECTS AND COORDINATES COMMISSIONING ACTIVITIES AND PROVIDES PREFUNCTIONAL CHECKLISTS AND FUNCTIONAL TEST PROCEDURES FOR CONTRACTORS USE.
C. COMMISSIONING REQUIRES THE PARTICIPATION OF CONTRACTORS TO ENSURE THAT SYSTEMS ARE OPERATING IN A MANNER CONSISTENT WITH THE CONTRACT DOCUMENTS. CONTRACTORS SHALL BE FAMILIAR WITH PARTS OF SECTION 01 91 13 -GENERAL COMMISSIONING REQUIREMENTS AND SHALL EXECUTE COMMISSIONING RESPONSIBILITIES ASSIGNED TO THEM IN THE CONTRACT DOCUMENTS.
A. ELECTRICAL CONTRACTORS. THE COMMISSIONING RESPONSIBILITIES FOR THE ELECTRICAL CONTRACTOR ARE AS FOLLOWS (ALL REFERENCES APPLY ONLY TO EQUIPMENT INCLUDED IN THE COMMISSIONING SCOPE OF WORK):
A. INCLUDE THE COMMISSIONING COST OF THE ELECTRICAL CONTRACTOR IN THE CONTRACT PRICE.
B. IN EACH PURCHASE ORDER OR SUBCONTRACT WRITTEN, INCLUDE REQUIREMENTS FOR SUBMITTAL DATA, O&M DATA, AND TRAINING.
C. ATTEND A COMMISSIONING SCOPING MEETING AND OTHER SCHEDULED COMMISSIONING MEETINGS NECESSARY TO FACILITATE THE CX PROCESS.
D. CONTRACTORS SHALL PROVIDE THE CA COMPLETE SHOP DRAWING SUBMITTALS OF ALL COMMISSIONED EQUIPMENT AND SYSTEMS.
E. CONTRACTORS SHALL PROVIDE EQUIPMENT ACCEPTANCE TESTING FINAL REPORTS. ANY DEFICIENCIES FOUND SHALL BE RECTIFIED, AND WORK AFFECTED BY SUCH DEFICIENCIES SHALL BE COMPLETELY RE-TESTED AT THE CONTRACTOR'S EXPENSE. FINAL ACCEPTANCE OF THE ELECTRICAL POWER SYSTEM IS CONTINGENT UPON SATISFACTORY COMPLETION OF THE ACCEPTANCE AND SYSTEM FUNCTION TESTS.
F. PROVIDE ADDITIONAL RESTED DOCUMENTATION, PRIOR TO NORMAL O&M MANUAL SUBMITTALS, TO THE CA FOR DEVELOPMENT OF START UP AND FUNCTIONAL TESTING PROCEDURES.
I) TYPICALLY THIS WILL INCLUDE DETAILED MANUFACTURER INSTALLATION AND START UP, OPERATING, TROUBLESHOOTING AND MAINTENANCE PROCEDURES, AND FULL WARRANTY INFORMATION, INCLUDING ALL RESPONSIBILITIES OF THE OWNER TO KEEP THE WARRANTY IN FORCE CLEARLY IDENTIFIED. IN ADDITION, THE INSTALLATION AND CHECKOUT MATERIALS THAT ARE ACTUALLY SHIPPED INSIDE THE EQUIPMENT AND THE ACTUAL FIELD CHECKOUT SHEET FORMS TO BE USED BY THE FACTORY OR FIELD TECHNICIANS SHALL BE SUBMITTED TO THE CA.

SYMBOLS LIST

- DUPLEX RECEPTACLE
- HALF-HOT TAMPER RESISTANT RECEPTACLE
- GFCI DUPLEX RECEPTACLE
- WP — GFCI DUPLEX RECEPTACLE ,GROUNDED WITH WEATHERPROOF BOX AND GASKETED COVER
- DUPLEX SPLIT RECEPTACLE CONTROLLED VIA OCCUPANCY SENSOR & PERMANENTLY MARKED PER TITLE 24
- DUPLEX RECEPTACLE WITH DUAL USB PORT
- SPECIALTY RECEPTACLE, VOLTAGE AND NEMA CONFIGURATION AS SPECIFIED IN PLAN NOTES.
- QUAD RECEPTACLE
- HALF-HOT TAMPER RESISTANT DUPLEX RECEPTACLE
- GFCI QUAD RECEPTACLE
- QUAD RECEPTACLE. 1 OF 4 OUTLETS CONTROLLED VIA OCCUPANCY SENSOR & PERMANENTLY MARKED PER TITLE 24
- DUPLEX RECEPTACLE, FLUSH FLOOR MOUNTED, FOR POKE-THRU INSTALLATION
- QUAD RECEPTACLE, FLUSH FLOOR MOUNTED, FOR POKE-THRU INSTALLATION
- COMBINATION DUPLEX POWER & DATA OUTLET, FLUSH FLOOR MOUNTED FOR POKE-THRU INSTALLATION
- COMBINATION QUAD POWER & DATA OUTLET, FLUSH FLOOR MOUNTED POKE-THRU INSTALLATION
- AV — COMBINATION QUAD POWER, DATA AND AV OUTLET, FLUSH FLOOR MOUNTED FOR POKE-THRU INSTALLATION
- QUAD RECEPTACLE, FLUSH FLOOR MOUNTED, FOR IN-SLAB INSTALLATION
- COMBINATION DUPLEX POWER & DATA OUTLET, FLUSH FLOOR MOUNTED FOR IN-SLAB INSTALLATION
- COMBINATION QUAD POWER & DATA OUTLET, FLUSH FLOOR MOUNTED IN-SLAB INSTALLATION
- AV — COMBINATION QUAD POWER, DATA AND AV OUTLET, FLUSH FLOOR MOUNTED FOR IN-SLAB INSTALLATION
- EF 1 — MECHANICAL/PLUMBING EQUIPMENT TAG
- TC — TIME CLOCK
- T — LOW VOLTAGE TRANSFORMER
- T — THERMOSTAT

- J — JUNCTION BOX, CEILING MOUNTED
- J — JUNCTION BOX, WALL MOUNTED
- JUNCTION BOX, GROUND MOUNTED, FOR POKE-THRU INSTALLATION
- JUNCTION BOX, GROUND MOUNTED, FOR IN-SLAB INSTALLATION
- (1) TELEPHONE AND (1) DATA OUTLET WITH COVER PLATE, 3/4" CONDUIT, AND PULL STRING TO ACCESSIBLE CEILING SPACE. TERMINATE CONDUITS WITH PLASTIC BUSHINGS.
- (1) DATA OUTLET WITH COVER PLATE, 3/4" CONDUIT, AND PULL STRING TO ACCESSIBLE CEILING SPACE. TERMINATE CONDUITS WITH PLASTIC BUSHINGS.
- TV — (1) TV OUTLET WITH COVER PLATE, 3/4" CONDUIT, AND PULL STRING TO ACCESSIBLE CEILING SPACE. TERMINATE CONDUITS WITH PLASTIC BUSHINGS.
- $ — 20A SPST TOGGLE SWITCH
- $3 — 20A SPST TOGGLE SWITCH, 3-WAY
- $ — 20A DIMMER SWITCH
- T1 — 20A SPST TWIST TIMER. 2-HOUR UNLESS OTHERWISE LISTED.
- ESM — UL924 EMERGENCY SWITCH MODULE. PROVIDES MIRROR SWITCHING OF NORMAL SWITCH LEG AND PROVIDES UL924 SWITCHING TO FULL BRIGHT UPON POWER LOSS.
- S0 — DIGITAL SWITCH, WALL MOUNTED
- MS — MOTION SENSOR, WALL MOUNTED
- OS — OCCUPANCY SENSOR, CEILING MOUNTED
- PS — PHOTO SENSOR, CEILING MOUNTED
- VS — VACANCY SENSOR, CEILING MOUNTED
- VS — VACANCY SENSOR, WALL MOUNTED
- SD — SMOKE DETECTOR, CEILING MOUNTED
- SD — SMOKE DETECTOR, WALL MOUNTED
- DISCONNECT SWITCH, SIZE AS NOTED
- VFD — VARIABLE FREQUENCY DRIVE, SIZE AS NOTED
- $M — MOTOR RATED SWITCH

- BRANCH CIRCUIT HOMERUN
- 3/4" CONDUIT MINIMUM - 1#12 HOT, 1#12 NEUTRAL AND 1#12 GROUND. TYPICAL UNLESS NOTED OTHERWISE.
- GND / NEUTRAL / HOT(S) — BRANCH CIRCUIT WIRING WITH TICK MARKS.
- X — FEEDER TAG.
- CONDUIT TURNING UP
- CONDUIT TURNING DOWN
- ELECTRICAL PANEL
- CIRCUIT BREAKER ON SINGLE LINE DIAGRAM
- ST — CIRCUIT BREAKER WITH SHUNT TRIP ON SINGLE LINE DIAGRAM
- TRANSFORMER ON SINGLE LINE DIAGRAM
- AUTOMATIC TRANSFER SWITCH ON SINGLE LINE DIAGRAM
- M — METER WITH CURRENT TRANSFORMERS
- CURRENT TRANSFORMER
- ELECTRIC MOTOR, SIZE AS NOTED
- "P1" — ELECTRICAL PANEL ON SINGLE LINE DIAGRAM
- ALSIG — CIRCUIT BREAKER WITH ELECTRONIC SENSING, TIMING AND TRIPPING CONTROL WITH FIELD INTERCHANGEABLE TRIP UNITS. PROVIDE TRUE RMS FUNCTIONS WITH DESCRETE FIELD ADJUSTABLE SETTINGS INDEPENDENT OF OTHER ADJUSTMENTS.

A - ARC FLASH REDUCTION
L - LONG TIME TRIP
S - SHORT TIME OVERCURRENT TRIP
I - INSTANTANEOUS TRIP
G - GROUND FAULT TRIP, GROUND FAULT SENSING INTEGRAL WITH CIRCUIT BREAKER.

- GROUNDING ELECTRODE AND CONDUCTOR

CITY OF DANA POINT
PLANNING DIVISION
This plan has been reviewed for ZONING ONLY and meets the requirements of Title 9 of the Dana Point Municipal Code.
APPROVED KBN
DATE 10/21/24
COMMENTS BUILDING 12 (OC PERMIT PKG21-9516) PER CDP13-0018(I).

ELECTRICAL GENERAL NOTES

1. CONTRACTOR SHALL PERFORM WORK AS TO CONFORM TO LOCAL, STATE AND NATIONAL CODES AND THE REQUIREMENTS OF LOCAL AUTHORITIES HAVING JURISDICTION.
2. CONTRACTOR TO EXAMINE THE SITE TO DETERMINE THE EXACT CONDITIONS AFFECTING THE ELECTRICAL WORK.
3. DRAWINGS INDICATE THE GENERAL SCHEME OF THE INSTALLATION AND ARE DIAGRAMMATIC IN SCOPE. THE ENGINEER RESERVES THE RIGHT TO CHANGE THE LOCATION OF OUTLETS, CONDUIT, EQUIPMENT, APPARATUS, ETC. TO A REASONABLE EXTENT AS THE BUILDING CONDITIONS MAY DICTATE PRIOR TO THEIR INSTALLATION WITHOUT EXTRA COST TO THE OWNER. THE EXACT LOCATION AND ARRANGEMENT OF EQUIPMENT AND PARTS SHALL BE DETERMINED AS THE WORK PROGRESSES.
4. DETAILS OF CONSTRUCTION AND OF WORKMANSHIP WHERE NOT SPECIFICALLY DESCRIBED HEREIN OR INDICATED ON THE DRAWINGS SHALL BE SUBJECT TO THE ENGINEER'S APPROVAL. IT IS THE INTENT OF THESE SPECIFICATIONS TO PROVIDE COMPLETE SYSTEMS, LEFT IN GOOD WORKING ORDER, READY FOR OPERATION.
5. SCRAP AND DEBRIS, EXCEPT AS OTHERWISE SPECIFIED, SHALL BE REMOVED FROM THE SITE AND DISPOSED OF BY THIS CONTRACTOR.
6. THE CONTRACTOR SHALL BE RESPONSIBLE FOR START-UP OF ALL SYSTEMS.
7. WORK SHALL BE DONE WITH A MINIMUM OF DUST AND DIRT. PROVIDE SUFFICIENT FIREPROOF TARPAULINS AND COVER ALL EQUIPMENT IN WORK AREA WITH SAME DURING WORK OPERATIONS.
8. CONTRACTOR SHALL FURNISH SHOP DRAWINGS AND EQUIPMENT CUTS TO THE ARCHITECT FOR APPROVAL (MINIMUM (5) COPIES).
9. COORDINATE NEW SERVICE CONNECTIONS WITH LOCAL UTILITY COMPANY(S).
10. CONTRACTOR SHALL FILE, SECURE AND PAY FOR ANY NECESSARY APPROVALS, PERMITS AND INSPECTIONS.
11. WORK SHALL BE GUARANTEED TO BE FREE FROM DEFECT FOR ONE YEAR AFTER ACCEPTANCE OF WORK.
12. CONTRACTOR TO COORDINATE TESTING WITH LOCAL OFFICIALS.
13. WORK BE IN STRICT CONFORMANCE WITH THE LATEST VERSION OF THE STATE OF CALIFORNIA FIRE CODE, THE CALIFORNIA ELECTRIC CODE, THE CALIFORNIA GREEN CODE, AND THE CALIFORNIA BUILDING CODE.
14. PRIOR TO TESTING, CONTRACTOR SHALL MAKE SYSTEM ADJUSTMENTS REQUIRED FOR PROPER OPERATION. ADJUSTMENTS SHALL INCLUDE TRANSFORMER TAPS, CIRCUIT BREAKER MAGNETIC SETTINGS, GROUND FAULT RELAY TRIP SETTINGS, BALLAST TAP SETTINGS, ETC.
15. CONTRACTOR SHALL BE RESPONSIBLE FOR DISCONNECTING AND MAKING SAFE ELECTRICAL FACILITIES IN EXISTING STRUCTURE PRIOR TO DEMOLITION.
16. CONTRACTOR SHALL BE RESPONSIBLE FOR COMMISSIONING OF SYSTEMS AS REQUIRED BY LOCAL CODE.
17. EQUIPMENT SHALL BE LISTED BY A CITY OF DANA POINT RECOGNIZED ELECTRICAL TESTING LAB (IE U.L.) OR APPROVED BY THE DEPARTMENT.
18. COMPLY WITH CITY OF DANA POINT AMENDMENTS TO 2019 CEC. USE RIGID METAL CONDUIT IN AREAS EXPOSED TO WEATHER. USE GROUND WIRE INSIDE FLEXIBLE METAL CONDUITS. METAL CONDUIT SHALL NOT BE INSTALLED IN CONTACT WITH EARTH.
19. SCREENING SHALL BE PROVIDED SO THAT MATERIALS STORED IN ANY OUTDOOR STORAGE AREA AND/OR EQUIPMENT AT GRADE OR ON THE ROOF ARE SCREENED FROM VIEW FROM ADJACENT STREETS, NO MATTER THE STREET GRADE, AND PROPERTIES AT THE SAME GRADE.
20. PROVIDE UNDERGROUND RACEWAY(S) FOR INCOMING TELEPHONE SERVICE. RACEWAYS SHALL BE 2" MINIMUM (UNLESS OTHERWISE LISTED).
21. UNDERGROUND RACEWAYS, SHALL BE TYPE DB, SCHEDULE 40 PVC, RIGID NON-METALLIC CONDUIT, AND MANUFACTURED BY CARLON OR APPROVED EQUAL AND SHALL BE INSTALLED IN ACCORDANCE WITH NEC ARTICLE #352.
22. NON-METALLIC RIGID CONDUIT SHALL BE MANUFACTURED IN STRICT CONFORMANCE WITH UL #651 AND NEMA #TC-2.
23. GROUND CONDUCTORS SHALL BE INSULATED COPPER.
24. FITTINGS FOR RIGID NON-METALLIC CONDUIT SHALL BE OF THE SOLVENT CEMENTED TYPE AND SHALL BE MANUFACTURED IN STRICT CONFORMANCE WITH UL 3514 AND NEMA #TC-3. SOLVENT CEMENT PROCEDURES SHALL BE IN ACCORDANCE WITH THE MANUFACTURERS RECOMMENDATIONS.
25. WHEREVER POSSIBLE, RIGID NON-METALLIC CONDUIT ELBOWS, OFFSETS, ETC. SHALL BE MADE USING 30 DEGREE, 45 DEGREE AND 90 DEGREE FACTORY ELBOWS. WHERE FACTORY ELBOWS CANNOT BE ACCOMMODATED, FIELD BENDING SHALL USE HEATING BOXES, END PLUGS AND FORMING GUIDES AS RECOMMENDED BY THE MANUFACTURER. CARE SHALL BE EXERCISED TO ENSURE THAT THE INTERNAL DIAMETER OF CONDUITS IS NOT EFFECTIVELY REDUCED BY FIELD BENDING.
26. MINIMUM BENDING RADIUS FOR RIGID NON-METALLIC CONDUIT SHALL NOT BE LESS THAN PERMITTED BY NEC TABLE 2, CHAPTER 9.
27. MINIMUM BURIAL DEPTH FOR UNDERGROUND RIGID NON-METALLIC RACEWAY SHALL BE 36" BELOW FINISHED GRADE. WHERE LESSER DEPTHS ARE REQUIRED DUE TO SUBSURFACE OBSTACLES, ENCASE RACEWAYS IN MINIMUM 3", 3000 PSI CONCRETE ENVELOPE.
28. PENETRATIONS THROUGH MANHOLES, HANDHOLES, FOUNDATIONS, ETC. SHALL BE MADE USING HOT-DIPPED GALVANIZED, RIGID STEEL (GRS) CONDUIT. MAKE TRANSITION FROM RIGID NON-METALLIC TO GRS AT 5'-0" FROM PENETRATION USING APPROVED TRANSITION COUPLING. PROVIDE 3" CONCRETE ENVELOPE AROUND TRANSITION COUPLING EXTENDING 3'-0" IN EITHER DIRECTION TO MINIMIZE SHEAR FORCES AT TRANSITION COUPLING.
29. RISERS AT UTILITY POLES SHALL CONSISTS OF GRS ELBOW(S) AND CONDUCT TO 10'-0" ABOVE FINISHED GRADE FOR ELECTRICAL SUPPLIES. SPARE ELECTRICAL DUCTS SHALL BE CAPPED AT 6" ABOVE FINISHED GRADE.
30. CIRCUIT BREAKERS SUPPLYING HVAC EQUIPMENT SHALL BE UL LISTED TYPE HACR.
31. PROVIDE WEATHERPROOF (NEMA 3R) JUNCTION BOXES, CONDUIT, FITTINGS AND ENCLOSURES AT EXTERIOR LOCATIONS AND WET OR DAMP INTERIOR LOCATIONS.
32. AMPACITIES ARE BASED UPON TABLE 310.15(B)16 OF THE 2019 CALIFORNIA ELECTRICAL CODE.

LIGHTING/POWER CIRCUIT DESIGNATION

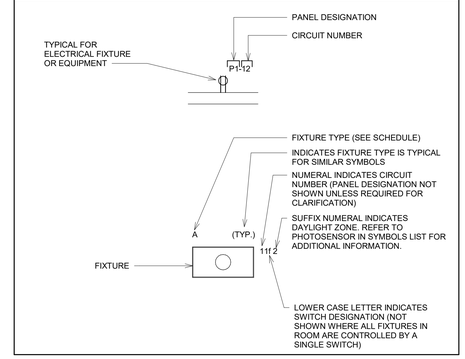

ABBREVIATIONS AND DESCRIPTIONS

A	AMPERES
AC	ALTERNATING CURRENT
AIC	AMPERES INTERRUPTING CAPACITY
AFC	AVAILABLE FAULT CURRENT
AFF	ABOVE FINISHED FLOOR
AFG	ABOVE FINISHED GRADE
AF	AMP FRAME/AMP FUSE
AL	ALUMINUM
AS	AMP SWITCH
AT	AMP TRIP
ATS	AUTOMATIC TRANSFER SWITCH
AWG	AMERICAN WIRE GAUGE
CATV	CABLE TELEVISION
CCTV	CLOSED CIRCUIT TELEVISION
CB	CIRCUIT BREAKER
CO	CONDUIT ONLY WITH NYLON PULLCORD
COAS	COAXIAL CABLE
CU	COPPER
CT	CURRENT TRANSFORMER
DC	DIRECT CURRENT
DIST	DISTRIBUTION
DB	DISTRIBUTION SWITCHBOARD
DWGS	DRAWINGS
EF	EXHAUST FAN
ELECT	ELECTRICAL
ELEV	ELEVATOR/ELEVATOR
EMER, EM	EMERGENCY
EMT	ELECTRO-METALLIC TUBING
EQUIP	EQUIPMENT
EXIST, EX	EXISTING
F	DEGREES FAHRENHEIT
FA	FIRE ALARM
FF	FURNITURE FEED, FINISHED FLOOR
G	GROUND BUS OR WIRE
GD	GARBAGE DISPOSAL
GFCI	GROUND FAULT CIRCUIT INTERRUPTER
GND	GROUND
H	HORIZONTAL
HP	HORSEPOWER
HOA	HAND-OFF-AUTMATIC
HZ	HERTZ
IG	ISOLATED GROUND
IMC	INTERMEDIATE METAL OCNDUIT
J-BOX	JUNCTION BOX
KCM	KILO-CIRCULAR-MIL
KVA	KILO-VOLTAMPERE
KW	KILO-WATT
LBS	POUNDS
LV	LOW VOLTAGE
MAX	MAXIMUM
MCC	MOTOR CONTROL CENTER
MCP	MOTOR CIRCUIT PROTECTION
MECH	MECHANICAL
MIN	MINIMUM
MLO	MAIN LUGS ONLY
MTD	MOUTNED
MTG	MOUNTING
N	NEUTRAL
NC	NORMALLY CLOSED
NEC	NATIONAL ELECTRICAL CODE
NIC	NOT IN CONTRACT
NTS	NOT TO SCALE
NO	NORMALLY OPEN
OFCI	OWNER FURNISHED CONTRACTOR INSTALLED
OFOI	OWNER FURNISHED OWNER INSTALLED
PB	PULLBOX
PC	PHOTOCELL CONTROL
PH	PHASE
PLBG	PLUMBING
PNL	PANEL
PVC	POLYVINYL CHLORIDE
PP	POWER POLE
PS	POWER SENTRY EMERGENCY BATTERY UNIT
QTY	QUANTITY
RECEPT	RECEPTACLE
REF	REFRIGERATOR
RGS	RIGID GALVANIZED STEEL
RM	ROOM
SB	STANDBY
SD	SMMOKE DETECTOR
SPEC	SPECIFICATION
SQ FT	SQUARE FEET OR SQUARE FOOT
SWBD	SWITCHBOARD
SWGR	SWITCHGEAR
TEMP	TEMPERATURE OR TEMPORARY
TV	TELEVISION
TYP	TYPICAL
UGPS	UNDERGROUND PULL SECTION
UL	UNDERWRITERS LABORATORIES
UNO	UNLESS NOTED OTHERWISE
V	VOLTS
VA	VOLTAMPERE
VFD	VARIABLE FREQUENCY DRIVE
W	WITH
WP	WEATHER PROOF
WT	WEIGHT
X	EXISTING
XFMR	TRANSFORMER

ELECTRICAL SHEET LIST

Sheet Number	Sheet Name
E0.1.1	ELECTRICAL LEAD SHEET
E0.1.2	ELECTRICAL NOTES
E2.1.1	BUILDING 12 - LEVEL 1 - POWER PLAN
E2.1.2	BUILDING 12 - LEVEL 2 - POWER PLAN
E2.1.3	BUILDING 12 - ROOF ELECTRICAL PLAN
E3.1.1	BUILDING 12 - LEVEL 1 - LIGHTING PLAN
E3.1.2	BUILDING 12 - LEVEL 2 - LIGHTING PLAN
E4.1.1	BUILDING 12 - SINGLE LINE DIAGRAM & ENLARGED PLANS
E5.1.1	ELECTRICAL SCHEDULES
E6.1.1	ELECTRICAL DETAILS
E8.1.1	BUILDING 12 - TITLE 24 COMPLIANCE REPORT
E8.1.2	BUILDING 12 - TITLE 24 COMPLIANCE REPORT

Zoning: CanningK 11/13/2024

ELECTRICAL NOTES AND SPECIFICATIONS

RACEWAYS

1. UNLESS OTHERWISE NOTED, RACEWAY TYPES SHALL BE AS INDICATED BELOW:

LOCATION	RACEWAY
1. OUTDOORS, ABOVE GRADE	GALVANIZED RIGID STEEL (GRS) OR RIGID ALUMINUM
2. INDOOR FEEDERS AND SUBFEEDERS EXPOSED TO PHYSICAL DAMAGE	ALVANIZED RIGID STEEL (GRS) OR INTERMEDIATE METALLIC CONDUIT
3. INDOOR FEEDERS AND SUBFEEDERS NOT EXPOSED TO PHYSICAL DAMAGE	ELECTRICAL METALLIC TUBING (EMT)
4. INDOOR BRANCH CIRCUITS EXPOSED IN UTILITY AREAS	ELECTRICAL METALLIC TUBING (EMT)
5. INDOOR BRANCH CIRCUITS EXPOSED IN FINISHED AREAS	SURFACE METAL/NON-METALLIC RACEWAY
6. INDOOR BRANCH CIRCUITS CONCEALED	(SEE CONDUCTORS)
7. INDOOR FIXTURE AND VIBRATING EQUIPMENT CONNECTIONS	FLEXIBLE METALLIC CONDUIT
8. INDOOR AND OUTDOOR MOTOR CONNECTIONS	LIQUID-TIGHT FLEXIBLE METAL CONDUIT
9. MOTOR CONNECTIONS IN ENVIRONMENTAL AIR PLENUMS	FLEXIBLE METAL CONDUIT
10. UNDERGROUND	TYPE "DB", SCHEDULE 40 RIGID (PVC), NON METALLIC CONDUIT
11. UNDERGROUND PENETRATION THRU GRADE	GALVANIZED RIGID STEEL (GRS)

2. GALVANIZED RIGID STEEL CONDUIT SHALL BE MANUFACTURED IN ACCORDANCE WITH ANSI #C80.1 AND UL #6. INSTALLATION OF GALVANIZED RIGID STEEL CONDUIT SHALL BE IN STRICT CONFORMANCE WITH NEC ARTICLE #344. BENDING RADIUS SHALL NOT BE LESS THAN NEC TABLE #346-2, CHAPTER 9. SUPPORT SPACING SHALL NOT EXCEED NEC TABLE #344.30(B)(2).
3. EMT SHALL BE MANUFACTURED IN ACCORDANCE WITH ANSI #C80.3 AND UL #797. INSTALLATION OF ELECTRICAL METALLIC TUBING SHALL BE IN STRICT CONFORMANCE WITH NEC ARTICLE #358. BENDING RADIUS SHALL NOT BE LESS THAN NEC TABLE #346-2, CHAPTER 9. SUPPORT SPACING SHALL NOT EXCEED 10'-0". ALL EMT COUPLINGS AND CONNECTORS SHALL BE OF THE CONCRETE-TIGHT AND RAIN-TIGHT TYPE. SET SCREW CONNECTORS SHALL NOT BE USED.
4. FLEXIBLE METAL CONDUIT SHALL BE MANUFACTURED IN ACCORDANCE WITH UL #1. INSTALLATION OF FLEXIBLE CONDUIT SHALL BE IN STRICT CONFORMANCE WITH NEC #348 AND SHALL BE LIMITED TO 6'-0" MAXIMUM LENGTHS FOR CONNECTIONS TO LIGHTING FIXTURES AND VIBRATING EQUIPMENT. BENDING RADIUS FOR FLEXIBLE METAL CONDUIT SHALL NOT BE LESS THAN THOSE PERMITTED FOR CONDUCTOR BENDING RADIUS. CONNECTORS FOR FLEXIBLE METAL CONDUIT SHALL BE OF SINGLE SCREW, MALLEABLE IRON CLAMPING TYPE (THOMAS & BETTS SERIES #250). FLEXIBLE METAL CONDUIT AND CONNECTORS SHALL BE UL LISTED AND APPROVED FOR SHEATH GROUNDING FOR BRANCH CIRCUITS OF 20A OR LESS IN LENGTHS NOT TO EXCEED 6'-0". PROVIDE A GROUNDING CONDUCTOR SIZED TO MEET NEC TABLE 250.122 WHERE A CONDUIT OVERCURRENT PROTECTION EXCEEDS 20A.
5. LIQUID-TIGHT FLEXIBLE METAL CONDUIT SHALL BE INSTALLED IN STRICT CONFORMANCE WITH NEC ARTICLE #350 AND SHALL BE LIMITED TO 3'-0" LENGTHS FOR CONNECTIONS TO MOTORS, OUTDOOR VIBRATING EQUIPMENT AND OTHER EQUIPMENT IN WET AREAS. LIQUID-TIGHT FLEXIBLE METAL CONDUIT AND FITTINGS SHALL BE APPROVED FOR GROUNDING PURPOSES. PROVIDE A SEPARATE EXTERNAL BONDING CONDUCTOR WHERE ANY OF THE FOLLOWING CONDITIONS EXIST:
   A. CONDUIT SIZE EXCEEDS 1 1/4" TRADE SIZE.
   B. 1/2" CONDUIT HOUSES A CIRCUIT PROTECTED IN EXCESS OF 20A.
   C. 3/4" THRU 1 1/4" CONDUIT HOUSES A CIRCUIT PROTECTED IN EXCESS OF 60A.

   FITTINGS FOR LIQUID-TIGHT FLEXIBLE METAL CONDUIT SHALL BE THOMAS & BETTS WITH OR WITHOUT EXTERNAL GROUND LUG AS REQUIRED ABOVE.
6. ALUMINUM RIGID CONDUIT, MANUFACTURED IN ACCORDANCE WITH ASTM #C-80.5 AND UL #6 MAY BE SUBSTITUTED FOR GALVANIZED RIGID STEEL CONDUIT IN INDOOR AND OUTDOOR ABOVE GRADE LOCATIONS. ALL REQUIREMENTS FOR GALVANIZED RIGID STEEL CONDUIT SHALL APPLY. ALUMINUM CONDUIT SHALL NOT BE USED IN CONCRETE OR IN BELOW GRADE APPLICATIONS.
7. INTERMEDIATE METAL CONDUIT, MANUFACTURED IN ACCORDANCE WITH UL #1242 MAY BE SUBSTITUTED FOR GALVANIZED RIGID STEEL CONDUIT IN ABOVE GRADE, INDOOR APPLICATIONS. IMC SHALL NOT BE PERMITTED IN OUTDOOR ABOVE OR BELOW GRADE APPLICATIONS. ALL OTHER REQUIREMENTS FOR GALVANIZED RIGID STEEL CONDUIT SHALL APPLY.
10. USE OF LIQUID-TIGHT FLEXIBLE METAL CONDUIT OR LIQUID NON-METALLIC SHALL NOT BE PERMITTED IN ENVIRONMENTAL AIR PLENUMS, INCLUDING, RETURN AIR CEILING PLENUMS AND RAISED COMPUTER FLOORS.

CONDUCTORS

1. UNLESS OTHERWISE NOTED, CONDUCTOR TYPES SHALL BE AS INDICATED BELOW:

LOCATION	CONDUCTORS
1. BRANCH CIRCUITS AND FEEDERS INDOORS IN CONDUIT	THHN/THWN
2. CONCEALED BRANCH CIRCUITS	TYPE "AC" CABLE
3. CONCEALED BRANCH CIRCUITS PLACE OF ASSEMBLY	TYPE "MC" CABLE
4. UNDERGROUND OUTDOORS	RHW/THW/THWN
5. UNDERGROUND SERVICE ENTRANCE	RHW/USE
6. FIXTURE CONNECTIONS	SF-2
7. TEMPORARY LIGHT AND POWER	TYPE "NM" CABLE

2. ALL WIRE AND CABLE SHALL BE COPPER CONDUCTORS. CONDUCTORS #10AWG AND SMALLER MAY BE SOLID. CONDUCTORS LARGER THAN #10AWG SHALL BE STRANDED.
3. CONDUCTORS #6AWG AND SMALLER MAY BE SPLICED USING NYLON SELF- INSULATED WIRE NUTS AS MANUFACTURED BY 3M "SCOTHLOK". IDEAL "WIRE-NUT" OR APPROVED EQUAL.
4. CONDUCTORS LARGER THAN #6AWG SHALL BE SPLICED USING SPLIT BOLT CONNECTORS WITH TAPED JACKET. PREMANUFACTURED SPLICES BY ILSCO OR MAC PRODUCTS OR BY HYDRAULICALLY APPLIED COMPRESSION SPLICES. MANUFACTURERS TOOLING, DYES AND RECOMMENDATIONS SHALL GOVERN HYDRAULICALLY APPLIED COMPRESSION SPLICES.
5. EXCEPT WHERE EQUIPMENT, SUCH AS MOLDED CASE CIRCUIT BREAKERS ARE SUPPLIED WITH FACTORY INSTALLED SET SCREW LUGS, ALL CONNECTIONS FOR CABLES 4/0 AND LARGER SHALL BE MADE USING NEMA BOLT COMPRESSION LUGS. LUGS SHALL BE HYDRAULICALLY APPLIED USING MANUFACTURER'S TOOLING, DIES AND RECOMMENDED PROCEDURES.
6. CONTROL WIRING FOR HVAC EQUIPMENT UTILIZING CONTROL CIRCUIT VOLTAGES OF LESS THAN 60VAC SHALL BE #18AWG MULTI-CONDUCTOR NEC TYPE "CL2". WHEN INSTALLED IN ENVIRONMENTAL AIR PLENUMS, LOW VOLTAGE CONTROL WIRING SHALL BE NEC TYPE "CL2P". LOW VOLTAGE CONTROL WIRING SHALL BE INSTALLED IN ACCORDANCE WITH NEC ARTICLE #725.
7. CONTROL WIRING FOR HVAC EQUIPMENT AND OTHER EQUIPMENT UTILIZING 120V CONTROL SHALL BE #14AWG TYPE THHN/THWN INSTALLED IN RACEWAYS.
8. WHERE ISOLATED GROUND RECEPTACLES ARE INDICATED ON THE DRAWINGS, INSTALL AN INSULATED (GREEN) GROUND CONDUCTOR WITH THE BRANCH CIRCUIT. IN CONCEALED LOCATIONS, TYPE "MC" CABLE SHALL BE UTILIZED FOR SUPPLY OF ISOLATED GROUND OUTLETS.
9. WIRING SHOWN TO REPRESENT 1#12H, 1#12N & 1#12GND UNLESS NOTED OTHERWISE BY PLAN NOTE, TICK MARKS OR FEEDER CALLOUT. PROVIDE SEPARATE NEUTRALS FOR SINGLE-PHASE LOADS. DO NOT INSTALL MULTI-WIRE CIRCUITS WITH SHARED NEUTRALS.
10. ADJUST BRANCH CONDUCTOR SIZES AS REQUIRED FOR VOLTAGE DROP. MAXIMUM BRANCH CIRCUIT LENGTHS SHALL BE AS FOLLOWS UNLESS OTHERWISE NOTED:

	#12	#10	#8
120V, 1 PHASE, 15A	50'	80'	125'
120V, 1 PHASE, 20A	40'	65'	95'
208V, 1 PHASE, 20A	65'	110'	170'
208V, 3 PHASE, 20A	75'	125'	200'
277V, 1 PHASE, 20A	95'	155'	250'
480V, 3 PHASE, 20A	180'	310'	500'

THE ABOVE LENGTHS REPRESENT "ONE-WAY" CIRCUIT LENGTH (NOT WIRE LENGTH) AND INCLUDE ALL VERTICAL RISES AND DROPS.

11. CONDUCTOR INSULATIONS SHALL BE COLOR CODED AS FOLLOWS:

	120/208V	277/480V
PHASE A	BLACK	BROWN
PHASE B	RED	ORANGE
PHASE C	BLUE	YELLOW
NEUTRAL	WHITE	WHITE
GROUND	GREEN	GREEN

WHERE CONDUCTORS ARE NOT AVAILABLE WITH COLOR CODED INSULATION, APPLY COLORED TAPES TO THE ENTIRE EXPOSED LENGTH OF CABLES IN PULL BOXES, SWITCHBOARDS, EQUIPMENT, ETC.

12. CONTROL CABLE CONDUCTORS SHALL BE COLOR CODED IN ACCORDANCE WITH ICEA STANDARDS.

GROUNDING

1. SERVICE ENTRANCE GROUNDING ELECTRODES SHALL INCLUDE THE FOLLOWING:
   A. REINFORCING BARS IN FOOTINGS.
   B. METALLIC DOMESTIC WATER SERVICE.
   C. AT LEAST ONE 3/4" X 10' COPPERWELD GROUND ROD DRIVEN OUTSIDE BUILDING AS NEAR TO SERVICE ENTRANCE EQUIPMENT AS POSSIBLE.
2. GROUNDING ELECTRODE CONDUCTORS SHALL BE SIZED IN ACCORDANCE WITH NEC TABLE #250.66 AND TABLE 250.122.
3. PROVIDE GROUNDING JUMPER AROUND WATER METER. JUMPER TO BE BARE STRANDED COPPER SIZED TO MATCH GROUNDING ELECTRODE CONDUCTOR SIZE. GROUNDING CLAMPS FOR WATER PIPING SHALL BE THOMAS AND BETTS SERIES 3900 "U" BOLT CLAMP. PROVIDE MALLEABLE IRON CONDUIT HUBB WHERE CONDUCTOR IS HOUSED IN CONDUIT FOR PHYSICAL PROTECTION.
4. ALL GROUNDING CONNECTIONS TO REINFORCING BARS AND GROUND RODS AND ALL UNDERGROUND GROUNDING CABLE SPLICES SHALL BE EXOTHERMIC WELDS BY CADWELD OR APPROVED EQUAL.
5. THE FOLLOWING COMPONENTS SHALL BE BONDED WITH A BARE COPPER CONDUCTOR SIZED IN ACCORDANCE WITH NEC TABLE #250.66.
   A. SERVICE RACEWAYS.
   B. METER OR CT CABINET ENCLOSURE.
   C. SERVICE DISCONNECT ENCLOSURE.
   D. GROUNDING ELECTRODES.

   SERVICE RACEWAYS SHALL BE BONDED BY USE OF GROUNDING BUSHINGS AT ALL TERMINATIONS UP TO AND INCLUDING THE SUPPLY SIDE OF SERVICE DISCONNECT(S).
6. WHERE MULTIPLE SERVICE DISCONNECTING MEANS ARE PROVIDED, THE GROUNDING ELECTRODE CONDUCTOR SHALL BE EXTENDED TO AND BONDED TO THE ENCLOSURE OF EACH DISCONNECTING MEANS.
7. THE FOLLOWING ITEMS SHALL BE BONDED TO THE SERVICE EQUIPMENT GROUND BUS USING CABLES SIZED IN ACCORDANCE WITH NEC TABLE #250.66:
   A. INTERIOR STEEL FRAME.
   B. STRUCTURAL STEEL FRAME.
   C. METAL SIDING (WHERE APPLICABLE).
   D. TANKS (ABOVE AND BELOW GRADE).
   E. GAS PIPING.
   F. FIRE SPRINKLER PIPING
8. GROUNDING OF ELECTRICAL EQUIPMENT AND ENCLOSURES DOWNSTREAM OF THE SERVICE DISCONNECT SHALL BE BY THE METALLIC RACEWAY SYSTEM WHERE PERMITTED BY THE NEC. PROVIDE SUPPLEMENTARY GROUNDING CONDUCTORS WHERE REQUIRED DUE TO LENGTHS OF FLEXIBLE METAL CONDUIT, DISCONTINUOUS ENCLOSURES, ETC.
9. GROUND NEUTRAL POINT OF ALL SEPARATELY DERIVED SYSTEMS, INCLUDING TRANSFORMERS, GENERATORS, UPS SYSTEMS, INVERTERS, ETC. WHERE BUILDING IS PROVIDED WITH A GROUNDED STRUCTURAL STEEL FRAME, GROUND TRANSFORMER, GENERATOR AND INVERTER NEUTRALS TO STEEL.
10. RECEPTACLE MOUNTING YOKE SHALL NOT BE USED FOR GROUNDING PURPOSES WITH RECESSED OUTLET BOXES. PROVIDE INSULATED GROUNDING JUMPER FROM OUTLET BOXES TO RECEPTACLE GROUNDING TERMINAL (DOES NOT APPLY FOR ISOLATED GROUND RECEPTACLES).
11. ALL PANELS SERVING ISOLATED GROUND RECEPTACLES SHALL BE PROVIDED WITH AN ISOLATED GROUND CONDUCTOR ROUTED WITH THE SUPPLY FEEDER. PROVIDE ISOLATED GROUND BUS IN PANEL.
12. REDUCING WASHERS, CONCENTRIC KNOCKOUTS OR ECCENTRIC KNOCKOUTS MAY NOT BE UTILIZED FOR GROUNDING OF RACEWAY WHERE CIRCUIT VOLTAGE EXCEEDS 250V TO GROUND. PROVIDE INTERIOR GROUNDING BUSHINGS AND BONDING CONDUCTOR TO PANEL ENCLOSURES.

BOXES

1. BOXES FOR BRANCH CIRCUIT WIRING DEVICES AND BRANCH CIRCUIT SPLICES SHALL BE AS INDICATED BELOW:

INSTALLATION TYPE	BOX TYPE
FLUSH WIRING DEVICES ON METAL STUDS	RACO #172/173/174 (4" SQUARE)
FLUSH WIRING DEVICES ON WOOD STUDS	RACO #504/565 GANGABLE
FLUSH WIRING DEVICES IN MASONRY WALLS	RACO #690 (1 GANG)
GANG BOXES	RACO #951/952/953/954/955
CEILING BAR BOX (HUNG CEILING)	RACO #280/917
CEILING BAR BOX (WOOD JOIST)	RACO #326
SURFACE WIRING DEVICE (DRY AREAS)	RACO #192 (4" SQUARE)
BRANCH CIRCUIT JUNTION BOX (DRY AREAS)	RACO #245 W/#832 BLANK COVER
SURFACE WIRING DEVICES (WET AREAS, 1 GANG)	BELL 2704-/273-L (F.S. TYPE)
SURFACE WIRING DEVICES (WET AREAS, 2 GANG)	BELL 276-4L/ 277-4L (F.S. TYPE)

THE ABOVE MODEL NUMBERS ARE TYPICAL OF THE PRODUCTS REQUIRED. CONTRACTOR SHALL ADJUST MODEL NUMBERS AS REQUIRED TO SUIT JOB CONDITIONS, WALL THICKNESS, DEVICE REQUIREMENTS, ETC.

2. PULL AND JUNCTION BOXES SHALL BE CODE GAUGE ENAMELED STEEL, NEMA "1" WITH SCREW FASTENED COVERS WHEN USED IN INDOOR, DRY AREAS. STEEL GAUGE SHALL BE IN ACCORDANCE WITH NEC ARTICLE #314C.
3. PULL AND JUNCTION BOXES UTILIZED IN INDOOR AREAS WHICH MAY BECOME DAMP (BOILER ROOM, UTILITY ROOMS, CONNECTIONS TO UNDERGROUND RACEWAYS, ETC.) SHALL BE GALVANIZED TYPE NEMA "1".
4. PULL AND JUNCTION BOXES FOR USE OUTDOORS SHALL BE GALVANIZED AND OF NEMA "3R" OR NEMA "4X" IN COSTAL OR CORROSIVE ENVIRONMENTS, OR WHERE NOTED.
5. ALL PULL BOXES FASTENED TO EXTERIOR BLOCK OR MASONRY WALLS SHALL BE PROVIDED WITH 1 1/2" CHANNEL FRAMING SPACERS ORIENTED VERTICALLY AT REAR OF ENCLOSURE TO ENSURE AIR CIRCULATION BEHIND ENCLOSURE.
6. OUTLET, SWITCH AND JUNCTION BOXES FOR BRANCH CIRCUIT WORK SHALL BE SIZED IN ACCORDANCE WITH NEC #314.
7. PULLBOXES AND LARGER JUNCTION BOXES SHALL BE SIZED IN ACCORDANCE WITH NEC ARTICLE #314.
8. WHERE USE OF KNOCKOUTS IS DISCONTINUED BY CHANGES IN THE WORK, INSTALL PROPERLY SIZED KNOCKOUT SEALS BY THOMAS & BETTS, RACOR, APPLETON OR EQUAL.

LIGHTING

1. COORDINATE FIXTURE LOCATIONS WITH INSTALLED DUCTWORK, SPRINKLERS, ARCHITECTURAL SOFFITS, ETC.
2. FIXTURES INSTALLED IN CLOSETS SHALL COMPLY WITH NEC ARTICLE #410-8 FOR LOCATION AND TYPE OF CONSTRUCTION.
3. FIXTURES WEIGHING IN EXCESS OF 50# SHALL BE SUPPORTED INDEPENDENTLY OF THE OUTLET BOX (NEC #410-16(A)).
4. WHERE TROFFERS ARE INSTALLED IN SUSPENDED CEILINGS, FIXTURES SHALL BE SECURELY FASTENED TO GRID WITH CONCEALED BOLTS, SCREWS, RIVETS, OR TEE BAR CLIPS. WHERE CEILING SUPPORT IS NOT ADEQUATE (ONE WIRE IN EACH CORNER OF THE FIXTURE), SUPPORT FIXTURE HOUSING INDEPENDENTLY OF THE GRID.
5. WHERE FIXTURES ARE PENDANT MOUNTED ON CHAIN HUNG, SUPPORTS SHALL BE ADEQUATE TO HOLD THE WEIGHT OF THE FIXTURE PLUS 25#.
6. FIXTURE HOUSING SHALL NOT BE USED AS RACEWAYS, EXCEPT THOSE DESIGNED FOR INSTALLATION IN CONTINUOUS ROWS. MAKE BRANCH CIRCUIT SPLICES IN 4" SQUARE BOXES WITH BLANK COVER PLATES (NEC #410-31).
7. CEILING PENDANT MOUNTED AND WALL BRACKET MOUNTED FIXTURES SHALL BE PROVIDED WITH DECORATIVE CANOPIES MATCHING THE FIXTURE AND PENDANT FINISH.
8. RECESSED INCANDESCENT FIXTURES SHALL BE THERMALLY PROTECTED.
9. RECESSED FIXTURES SHALL MAINTAIN A MINIMUM CLEARANCE OF 1/2" TO COMBUSTIBLE CONSTRUCTION AND 3" TO THERMAL INSULATION UNLESS UL LISTED FOR DIRECT CONTACT WITH THESE MATERIALS (NEC #410-66 (A) & (B)).
10. PROTECT LAMPS, LENSES AND LOUVERS DURING CONSTRUCTION. LAMPS, FIXTURE HOUSING, LENSES AND LOUVERS SHALL BE CLEANED UPON COMPLETION OF WORK BY ALL TRADES. REPLACE DEFECTIVE OR DAMAGED LAMPS, LENSES, AND LOUVERS AS REQUIRED AT THE TIME OF CLEANING.
11. WHEN SHOWN ABOVE DOOR, EXTERIOR BUILDING MOUNTED LIGHTING AT EGRESS DOORS SHALL BE MOUNTED WITH THE BOTTOM WITH THE BOTTOM OF THE FIXTURE AT 6" ABOVE DOOR CASING.
12. WHEN SHOWN AT THE SIDE OF A DOOR, EXTERIOR BUILDING MOUNTING LIGHTING SHALL BE MOUNTED ON STRIKE SIDE OF DOOR WITH TOP OF FIXTURE ALIGNED WITH THE TOP OF THE DOOR.
13. WHERE RECESSED FIXTURES ARE INSTALLED IN FIRE RATED CEILINGS, TROFFERS SHALL BE SUPPORTED AND TENTED IN ACCORDANCE WITH UL REQUIREMENTS FOR FIRE RATED CEILING ASSEMBLY.

PANELBOARDS

1. EQUIPMENT INTERRUPTING RATINGS SHALL BE AS SHOWN ON SCHEDULES OR ON THE SINGLE LINE DIAGRAM. UNLESS OTHERWISE NOTED ALL PANELBOARDS SHALL BE FULLY RATED. SERIES RATED EQUIPMENT SHALL NOT BE ACCEPTABLE.
2. SERVICE PANELBOARDS AND MAIN DISTRIBUTION PANELBOARDS SHALL HAVE BREAKERS OR FUSED SWITCHES AS SHOWN. SERVICE SWITCHES RATED OVER 600A AND BRANCH SWITCHES RATED OVER 800A SHALL BE BOLTED PRESSURE SWITCHES, SQUARE D "BOLT-LOC", PRINGLE OR EQUAL.
3. PANELBOARDS SHALL BE OF DEAD FRONT CONSTRUCTION WITH AUTOMATIC OVERCURRENT DEVICES. VOLTAGE AND CURRENT RATINGS AS SHOWN. CIRCUIT BREAKERS SHALL BE BOLT-ON TYPE UNLESS OTHERWISE NOTED. PANELBOARDS SHALL BE UL LISTED AS MANUFACTURED BY SQUARE D, GE OR SIEMENS.
4. PANELBOARDS RATED OVER 225A AMPS SHALL BE SQUARE D "I-LINE", GE "SPECTRA SERIES" OR EQUAL BY SIEMENS.
5. CIRCUIT BREAKERS SUPPLYING HVAC EQUIPMENT SHALL BE UL LISTED TYPE HACR.
6. WHERE INDICATED ON DRAWINGS, PROVIDE SPLIT BUS PANELBOARDS.
5. PANELBOARDS SHALL BE PROVIDED WITH A TYPEWRITTEN DIRECTORY IN FRAME ON THE PANEL DOOR.

SAFETY SWITCHES

1. SAFETY SWITCHES SHALL BE HEAVY DUTY, FUSED OR UNFUSED, RATINGS AS SHOWN ON THE DRAWINGS.
2. SWITCHES SHALL BE QUICK-MAKE, QUICK-BREAK OPERATION AND SHALL HAVE PADLOCKING PROVISIONS.
3. SWITCHES SHALL BE FURNISHED IN NEMA ENCLOSURES SUITABLE FOR USE IN THE LOCATION SHOWN. SWITCHES SHALL BE AS MANUFACTURED BY SQUARE D, GENERAL ELECTRIC, SIEMENS OR APPROVED EQUAL.

GENERAL ROOF NOTES:

1. ELECTRICAL EQUIPMENT ON ROOF SHALL BE WEATHERPROOF, NEMA 3R OR NEMA 4X AS REQUIRED, INCLUDING DISCONNECT SWITCHES, STARTERS, CONDUIT, FITTINGS, ETC.
2. REFER TO AND COMPLY WITH HVAC PLANS, WIRING DIAGRAMS, ETC. VERIFY ALL FINAL EQUIPMENT LOCATIONS PRIOR TO ROUGH-IN.
3. PROVIDE CONDUIT ONLY FROM MECHANICAL UNITS TO RESPECTIVE CONTROL DEVICES (T-STAT., BY-PASS TIMER, ENERGY MANAGEMENT SYSTEM, ETC). COORDINATE LOCATIONS AND REQUIREMENTS WITH MECHANICAL CONTRACTOR/DRAWINGS, AND COMPLY.
4. PROVIDE FUSES FOR MECHANICAL EQUIPMENT. FUSES ARE TO BE CLASS "RK-1", "BUSS" TYPE "LPN-RK" (208V), OR "LPS-RK" (480V), "LOW-PEAK". EQUIPMENT NAMEPLATE RATING SUPERCEDES DESIGN VALUES.
5. FLEX CONDUIT SHALL CARRY A COPPER BONDING WIRE, SIZED PER NEC TABLE 250-122.
6. CONTRACTOR IS TO PROVIDE ADEQUATE SUPPORT FOR ROOF-MOUNTED EQUIPMENT.
7. NO CONDUIT IS TO RUN ON ROOF FOR MORE THAN 4'-0". ALL OTHER CONDUIT IS TO RUN BELOW ROOF AND STUB THRU NEAR EQUIPMENT. VERIFY LOCATIONS OF STUB-UPS WITH MECHANICAL DRAWINGS/CONTRACTOR PRIOR TO ROUGH-IN, AND COMPLY. ELECTRICAL PENETRATIONS THRU ROOF SHALL BE FLASHED.

WIRING DEVICES

1. WIRING DEVICES SHALL BE SPECIFICATION GRADE UNLESS OTHERWISE INDICATED.
2. UNLESS OTHERWISE INDICATED ON THE DRAWINGS, WIRING DEVICES SHALL BE AS SPECIFIED BELOW OR APPROVED EQUAL:

DEVICE	STANDARD DEVICES MANUFACTURER/MODEL	DECORATOR DEVICES MANUFACTURER/MODEL
DUPLEX RECEPTACLE 125V, 20A, GROUNDED NEMA #5-20R	LEVITON #5362	LEVITON #16342
SINGLE RECEPTACLE 125V, 20A, GROUNDED NEMA #5-20R	LEVITON #5361	LEVITON #16341
GFCI DUPLEX RECEPTACLE 125V, GROUNDED NEMA #5-15R	LEVITON #6598	LEVITON #6598
I.G. DUPLEX RECEPTACLE 125V, 20A, ISO GROUNDED NEMA #5-20R (ORANGE)	LEVITON #5362-IG	LEVITON #5362-IG
I.G. SINGLE RECEPTACLE 125V, 20A, ISO GROUNDED NEMA #5-20R (ORANGE)	LEVITON #5361-IG	LEVITON #5361-IG
I.G. LOCKING RECEPTACLE 250V, 20A, ISO GROUNDED NEMA #L6-20R (ORANGE)	LEVITON 70620-FIG	LEVITON 70620-FIG
I.G. LOCKING RECEPTACLE 250V, 30A, ISO GROUNDED NEMA #L6-30R (ORANGE)	LEVITON 70630-FIG	LEVITON 70630-FIG
CLOCK RECEPTACLE 125V, 20A, GROUNDED NEMA #5-20R	LEVITON #5361-CH	LEVITON 70630-FIG
TOGGLE SWITCH, 1 POLE 120/277V, 20A	LEVITON #5621	LEVITON #5621
KEY SWITCH, 1 POLE 120/277V, 20A	LEVITON #1221-L	N/A
TOGGLE SWITCH, 1 POLE W/ PILOT LIGHT 125V, 15A	LEVITON #5226	LEVITON #5628
TOGGLE SWITCH, 2 POLE 120/277V, 20A	LEVITON #5522	LEVITON #5622
KEY SWITCH, 2 POLE 120/277V, 20A	LEVITON 1222-L	N/A
TOGGLE SWITCH, 3 WAY 120/277V, 20A	LEVITON #5523	LEVITON #5623
KEY SWITCH, 3 WAY 120/277V, 20A	LEVITON 1223-L	N/A
TOGGLE SWITCH, 4 WAY 120/277V, 20A	LEVITON #5524	LEVITON #5624
KEY SWITCH, 4 WAY 120/277V, 20A	LEVITON 1224-L	N/A
INCANDESCENT/HALOGEN DIMMER 120V, 600W, 1 POLE ("NOVA-T" THIN PROFILE)	LUTRON # NT-600	LUTRON # NT-600
INCANDESCENT/HALOGEN DIMMER 120V, 600W, 3 WAY ("NOVA-T" THIN PROFILE)	LUTRON # NT-603	LUTRON # NT-603
INCANDESCENT/HALOGEN DIMMER 120V, 1000W, 1 POLE ("NOVA-T" THIN PROFILE)	LUTRON #NT-1000	LUTRON #NT-1000
INCANDESCENT/HALOGEN DIMMER 120V, 1000W, 3 WAY ("NOVA-T" THIN PROFILE)	LUTRON #NT-1	LUTRON #NT-1003
MAGNETIC LOW VOLTAGE DIMMER 120V, 600W, 1 POLE ("NOVA-T", THIN PROFILE)	LUTRON #NTLV-600	LUTRON #NTLV-600
MAGNETIC LOW VOLTAGE DIMMER 277V, 600W, 1 POLE ("NOVA-T", THIN PROFILE)	LUTRON #NTLV-600 -277	LUTRON #NTLV-600-277
MAGNETIC LOW VOLTAGE DIMMER 120V, 600W, 3 WAY ("NOVA-T", THIN PROFILE)	LUTRON #NTLV-603	LUTRON #NTLV-603
MAGNETIC LOW VOLTAGE DIMMER 120V, 1000W, 1 POLE ("NOVA-T", THIN PROFILE)	LUTRON #NTLV-1000	LUTRON #NTLV-1000
MAGNETIC LOW VOLTAGE DIMMER 277V, 1000W, 1 POLE ("NOVA-T", THIN PROFILE)	LUTRON #NTLV-1000 -277	LUTRON #NTLV-1000-277
MAGNETIC LOW VOLTAGE DIMMER 120V, 1000W, 3 WAY ("NOVA-T", THIN PROFILE)	LUTRON #NTLV-1003	LUTRON #NTLV-1003
ELECTRONIC LOW VOLTAGE DIMMER 120V, 300W, 1 POLE ("NOVA-T", THIN PROFILE)	LUTRON #NTELV-300	LUTRON #NTELV-300
ELECTRONIC LOW VOLTAGE DIMMER 120V, 600W, 1 POLE ("NOVA-T", THIN PROFILE)	LUTRON #NTELV-600	LUTRON #NTELV-600
MAGNETIC LOW VOLTAGE DIMMER 120V, 1000W, 1 POLE ("NOVA-T", THIN PROFILE)	LUTRON #NTLV-1000	LUTRON #NTLV-1000
MAGNETIC LOW VOLTAGE DIMMER 120V, 1000W, 3 WAY ("NOVA-T", THIN PROFILE)	LUTRON #NTLV-1003	LUTRON #NTLV-1003
FAN SPEED CONTROL 120V, 12A, 1 POLE	LUTRON #NTFS-12E	LUTRON #NTFS-12E
LINEAR SLIDE SWITCH 120/277V, 20A, 1 POLE	LUTRON #NT-1PS	LUTRON #NT-1PS
LINEAR SLIDE SWITCH 120/277V, 20A, 3 WAY	LUTRON #NT-3PS	LUTRON #NT-3PS
LINEAR SLIDE SWITCH 120/277V, 20A, 4 WAY	LUTRON #NT-4PS	LUTRON #NT-4PS

3. WHERE SINGLE POLE, 3-WAY OR 4-WAY STITCHES ARE GROUPED WITH DIMMERS OR FAN SPEED CONTROLS, PROVIDE LINEAR SLIDE SWITCHES BY LUTRON AS SPECIFIED ABOVE. PROVIDE MULTI-GANG COMMON WALLPLATE BY LUTRON. INDIVIDUALLY MOUNTED CONTROLS SHALL NOT BE ACCEPTED.
4. WHERE GANGED RECEPTACLES INCLUDE A GROUND FAULT CIRCUIT CIRCUIT INTERRUPTER, PROVIDE DECORATOR STYLE CONVENIENCE OUTLETS AND MULTI-GANG DECORATOR COVERPLATE.
5. WIRING DEVICE MOUNTING HEIGHTS SHALL BE AS FOLLOWS:

DEVICE	MOUNTING HEIGHT
RECEPTACLES (GENERAL AREAS)	1'-0" A.F.F. TO BOTTOM
RECEPTACLES (ABOVE COUNTERS)	6" ABOVE BACKSPLASH
RECEPTACLES (UTILITY AREAS)	4'-0" A.F.F. TO TOP
LIGHT SWITCHES (ALL AREAS)	4'-0" A.F.F. TO TOP
DIMMERS (ALL AREAS)	4'-0" A.F.F. TO TOP
CLOCK OUTLET	7'-0" A.F.F.
FIRE ALARM PULL STATIONS	4'-0" TO TOP
FIRE ALARM AUDIO SIGNAL DEVICES	1'-0" BELOW C.L.G. TO TOP
FIRE ALARM VISUAL SIGNAL DEVICES	6'-8" A.F.F.
WATER COOLER OUTLET	(COORDINATE W/SHOP DWGS)
THERMOSTAT & HVAC CONTROLS	4'-0" TO TOP
WALL MOUNTED EXIT LIGHTS	6" ABOVE DOOR TO BOTTOM

MOUNTING HEIGHTS FOR OTHER DEVICES NOT SPECIFIED ABOVE SHALL BE IN ACCORDANCE WITH NJAC #5:23-7, "BARRIER FREE SUBCODE".

6. OUTLETS INSTALLED WITHIN 6'-0" OF SINKS OR LAVATORIES SHALL BE PROVIDED WITH GROUND FAULT PROTECTION OR GROUND FAULT FEED THRU.
7. RECEPTACLES IN TOILET ROOMS SHALL BE PROVIDED WITH GROUND FAULT PROTECTION OR GROUND FAULT FEED THRU.
8. RECEPTACLES INSTALLED IN UNFINISHED BASEMENTS, GARAGES, CRAWL SPACES AND OUTDOORS AT GRADE SHALL BE PROVIDED WITH GROUND FAULT PROTECTION OR GROUND FAULT FEED THRU.
9. WHERE MULTIPLE SWITCHES INSTALLED IN MULTI-GANG BOXES WOULD RESULT IN VOLTAGE BETWEEN ADJACENT SWITCHES EXCEEDING 300V, INSTALL PERMANENT BARRIER BETWEEN SWITCHES.
10. UNLESS OTHERWISE INDICATED, COVERPLATES FOR INDOOR DEVICES IN FINISHED AREAS SHALL BE AS DIRECTED BY ARCHITECT.
11. COVERPLATES FOR SURFACE MOUNTED WIRING IN UTILITY AREAS SHALL BE OF THE RAISED COVER TYPE AS MANUFACTURED BY MULBERRY, RACO OR APPROVED EQUAL.
12. COVERPLATES FOR WEATHERPROOF DUPLEX RECEPTACLES SHALL BE BELL #223-V WITH GASKET. COVERPLATES FOR WEATHERPROOF SWITCH SHALL BE BELL #224-V WITH

CITY OF DANA POINT
PLANNING DIVISION

This plan has been reviewed for ZONING ONLY and meets the requirements of Title 9 of the Dana Point Municipal Code.

APPROVED KBN

DATE 10/21/24

COMMENTS BUILDING 12 (OC PERMIT PKG21-0516) PER CDP13-0018(I).

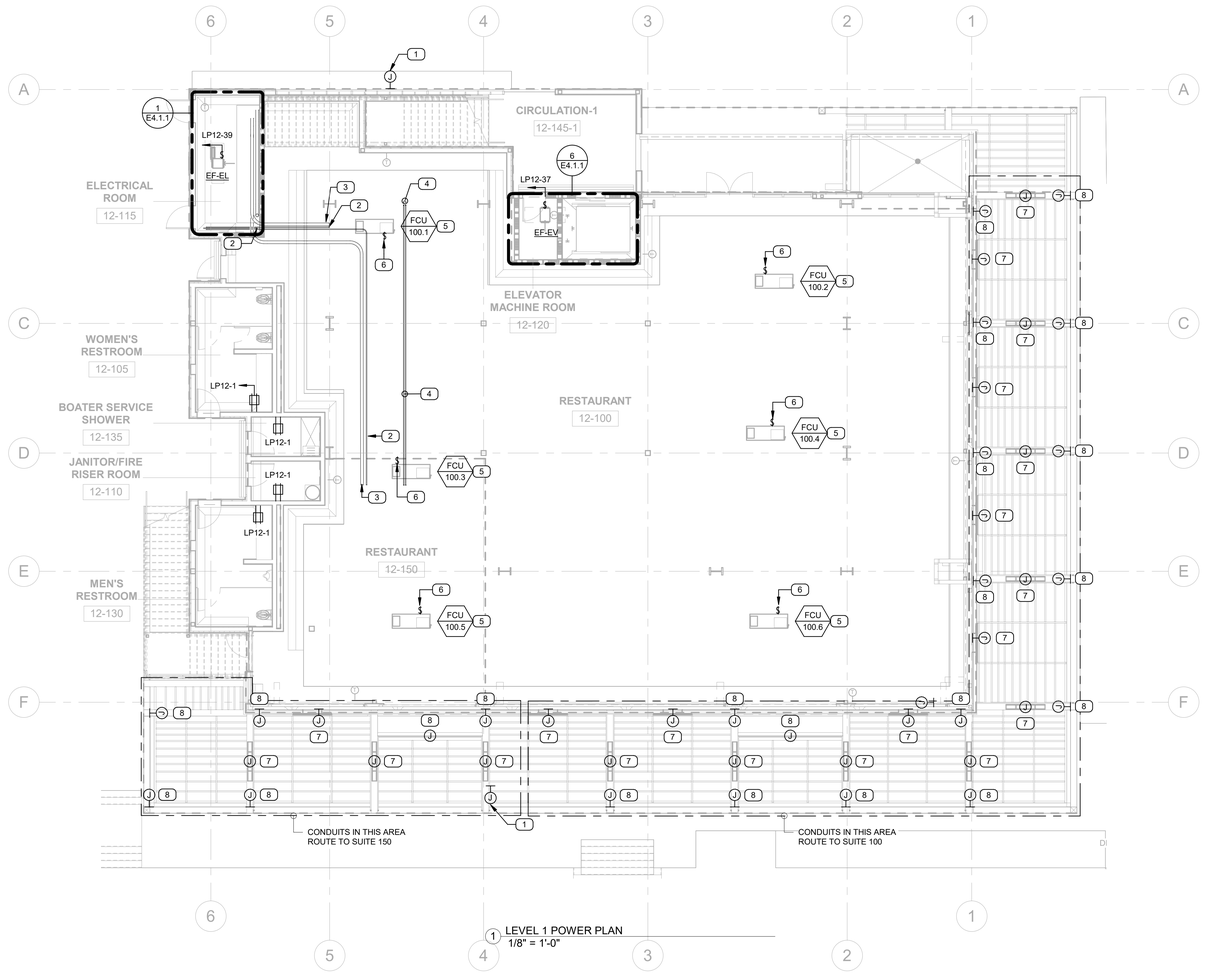

1 LEVEL 1 POWER PLAN
1/8" = 1'-0"

Zoning: CanningK 11/13/2024

Building&Safety: OCPWAzarvandB 12/22/2025

Permits: BNR21-0246, ELE21-0853, MEC21-0514, PLB21-0900

County of Orange - OC Public Works
OC Development Services
APPROVED

This set of plans and specifications must be kept on the job at all times. It is unlawful to make any changes or alterations to these plans without written permission from OC Public Works, OC Development Services of Orange County. The stamping of these plan specifications SHALL NOT be held to permit or be an approval of the violation of any provisions of any County Ordinance or State law.

Hani Tahsbsaee
BUILDING OFFICIAL

GENERAL NOTES

1. WIRING SHOWN TO REPRESENT 1#12H, 1#12N & 1#12GND UNLESS NOTED OTHERWISE BY PLAN NOTE, TICK MARKS OR FEEDER CALLOUT. PROVIDE SEPARATE NEUTRALS FOR ALL SINGLE-PHASE LOADS. MULTI-WIRE CIRCUITS SHARING NEUTRALS SHALL NOT BE UTILIZED.
2. REFER TO MECHANICAL AND PLUMBING PLANS FOR EXACT LOCATION OF HVAC AND PLUMBING EQUIPMENT AND RELATED DEVICES.
3. DEVICE AND RECEPTACLE ELEVATION SHOWN FOR REFERENCE. VERIFY EXACT LOCATIONS AND MOUNTING HEIGHTS OF DEVICES WITH ARCHITECTURAL PLANS.
4. PROVIDE UL APPROVED FIRE STOP SYSTEM AT PENETRATIONS OF FIRE RATED WALLS AND FLOORS WITH BOTH "F" AND "T" RATINGS REQUIRED TO MAINTAIN THE RATING OF THE ASSEMBLIES.
5. LOW VOLTAGE DEVICES ARE SHOWN FOR REFERENCE ONLY. REFER TO LOW VOLTAGE DRAWINGS FOR EXACT QUANTITY, LOCATIONS AND SPECIFICATIONS PRIOR TO ROUGH-IN.
6. NEW RECEPTACLES/SWITCHES SHALL BE DECORA STYLE. COORDINATE ALL RECEPTACLE, SWITCHES AND COVER PLATE WITH ARCHITECT PRIOR TO PROCUREMENT.
7. ELECTRICAL CONTRACTOR SHALL PROVIDE AND INSTALL ALL NECESSARY CONDUIT SUPPORTS AND ACCESSORIES TO MEET NEC SUPPORT REQUIREMENTS FOR CONDUIT RUNS.
8. CONDUITS SHALL BE ROUTED TIGHT TO STRUCTURE ABOVE.

PLAN NOTES (X)

1 PROVIDE WEATHERPROOF JUNCTION BOX FLUSH WITH FACE OF BUILDING WITH BLANK COVER PLATE AND 1/2" C.O. STUBBED INTO TENANT SPACE FOR FUTURE CONNECTION OF TENANT BUILDING MOUNTED SIGNAGE. ROUTE ADDITIONAL CONDUIT AND PULL LINE TO LCP FOR LANDLORD CONTROL OF TENANT SIGNAGE BRANCH CIRCUIT.

2 PROVIDE 1" C.O., COMPLETE WITH PULL ROPES, FROM FIRE ALARM CONTROL PANEL (FACP) TO POINT ABOVE ACCESSIBLE CEILING SPACE IN TENANT SUITE FOR FIRE ALARM WIRING (BY OTHERS). ROUTE CONDUIT TIGHT TO STRUCTURE ABOVE.

3 TENANT FEEDER CONDUIT. REFER TO SINGLE LINE DIAGRAM ON DRAWING E4.1.1 FOR ADDITIONAL INFORMATION.

4 PROVIDE 1" C.O., COMPLETE WITH PULL ROPES, FROM MAIN TELEPHONE BACKBOARD LOCATED ON LEVEL 2 TO POINT ABOVE ACCESSIBLE CEILING SPACE IN TENANT SUITE FOR LOW VOLTAGE WIRING (BY OTHERS). ROUTE CONDUIT TIGHT TO STRUCTURE ABOVE.

5 MECHANICAL EQUIPMENT PROVIDED BY MECHANICAL CONTRACTOR. COORDINATE REQUIREMENTS WITH MECHANICAL CONTRACTOR/PLANS PRIOR TO ROUGH-IN AND PROVIDE STARTERS AND ACCESSORIES REQUIRED FOR A COMPLETE INSTALLATION.

6 PROVIDE 208V, 30A, 2 POLE, NEMA 1 MOTOR RATED TOGGLE TYPE DISCONNECT SWITCH FOR FAN COIL UNIT. REFER TO MECHANICAL DRAWINGS FOR ADDITIONAL INFORMATION.

7 PROVIDE JUNCTION BOX FOR POWER CONNECTION TO PATIO HEATERS WITH 3/4" C.O. STUBBED INTO TENANT SPACE. JUNCTION BOXES AND CONDUIT TO BE CONCEALED ABOVE TRELLIS STRUCTURE. PATIO HEATERS TO BE CIRCUITED TO FUTURE TENANT PANELS (UNDER SEPARATE PERMIT).

8 PROVIDE JUNCTION BOX FOR POWER CONNECTION TO MOTOR SCREENS WITH 3/4" C.O. STUBBED INTO TENANT SPACE. JUNCTION BOXES AND CONDUIT TO BE CONCEALED ABOVE TRELLIS STRUCTURE. MOTOR SCREENS TO BE CIRCUITED TO FUTURE TENANT PANELS (UNDER SEPARATE PERMIT).

SMSARCHITECTS
100 Progress #250
Irvine, California 92618
949.757.3240 | www.sms-arch.com

CONSTANT
LINWOOD ENGINEERING INC
2301 dupont drive, suite 150
irvine, ca 92612 • 714.424.0001
www.linwoodengineering.com

DANA POINT HARBOR PARTNERS

PROJECT NAME
DANA POINT HARBOR COMMERCIAL CORE
BUILDING 12
1290 HARBOR WAY
DANA POINT, CA 92629

CLIENT
BWP | BURNHAM | WARD PROPERTIES

Robert Hatch P.E.
CA# E16118

REGISTERED PROFESSIONAL ENGINEER
ROBERT J. HATCH
E16118
ELECTRICAL
STATE OF CALIFORNIA

EXP. 12/31/25

No.	DATE	ISSUE
	06/01/2021	COUNTY SUBMITTAL
	09/24/2021	COUNTY RESUBMITTAL
	12/06/2022	50% DESIGN DEVELOPMENT
	02/10/2023	100% DESIGN DEVELOPMENT
	03/03/2023	50% CD PROGRESS SET
	04/21/2023	COUNTY RESUBMITTAL
A	07/24/2023	CITY RESUBMITTAL

DRAWINGS AND WRITTEN MATERIAL APPEARING HEREIN CONSTITUTE ORIGINAL AND UNPUBLISHED WORK OF SMS ARCHITECTS AND MAY NOT BE DUPLICATED, USED OR DISCLOSED WITHOUT WRITTEN CONSENT OF THE ARCHITECT

PROJECT NO 19019-12

DATE FEBRUARY 10, 2023

DRAWING TITLE
BUILDING 12 - LEVEL 1 - POWER PLAN

DRAWING NO.
E2.1.1

BIM 360://19274 Dana Point Harbor Revitalization_02/1/19274 MEP Dana Point - Bldg 12 R21.rvt

10/11/2024 9:26:02 AM

CITY OF DANA POINT
PLANNING DIVISION

This plan has been reviewed for ZONING ONLY and meets the requirements of Title 9 of the Dana Point Municipal Code.

APPROVED KBN

DATE 10/21/24

COMMENTS BUILDING 12 (OC PERMIT PKG21-0516) PER CDP13-0018(I).

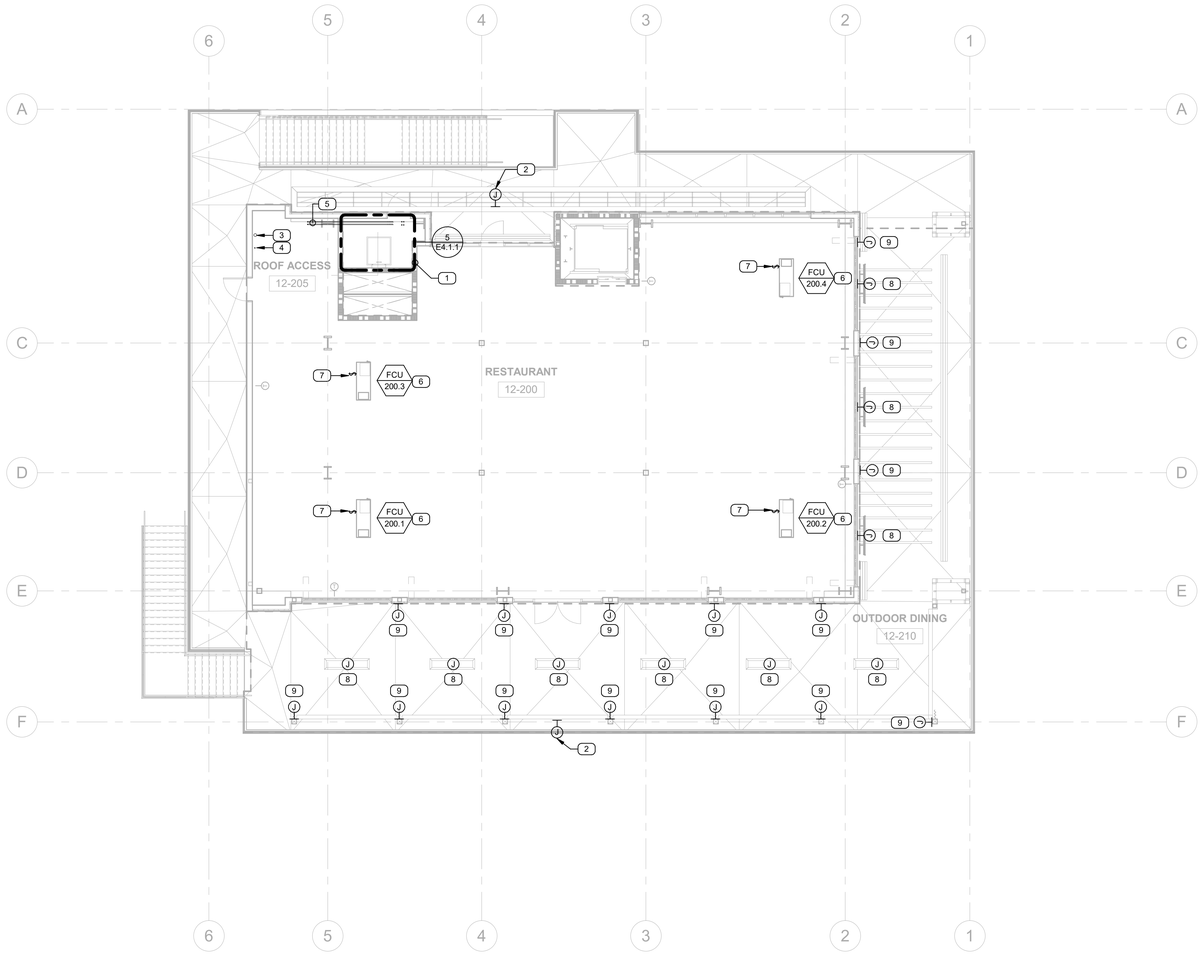

1 LEVEL 2 POWER PLAN
1/8" = 1'-0"

Zoning: CanningK 11/13/2024

Building&Safety: OCPWAzarvandB 12/22/2025

Permits: BNR21-0246, ELE21-0853, MEC21-0514, PLB21-0900

County of Orange - OC Public Works
OC Development Services
APPROVED
This set of plans and specifications must be kept on the job at all times. It is unlawful to make any changes or alterations to these plans without written permission from OC Public Works, OC Development Services of Orange County. The stamping of these plan specifications SHALL NOT be held to permit or be an approval of the violation of any provisions of any County Ordinance or State law.
Hani Tshetshaan
BUILDING OFFICIAL

GENERAL NOTES

1. WIRING SHOWN TO REPRESENT 1#12H, 1#12N & 1#12GND UNLESS NOTED OTHERWISE BY PLAN NOTE, TICK MARKS OR FEEDER CALLOUT. PROVIDE SEPARATE NEUTRALS FOR ALL SINGLE-PHASE LOADS. MULTI-WIRE CIRCUITS SHARING NEUTRALS SHALL NOT BE UTILIZED.
2. REFER TO MECHANICAL AND PLUMBING PLANS FOR EXACT LOCATION OF HVAC AND PLUMBING EQUIPMENT AND RELATED DEVICES.
3. DEVICE AND RECEPTACLE ELEVATION SHOWN FOR REFERENCE. VERIFY EXACT LOCATIONS AND MOUNTING HEIGHTS OF DEVICES WITH ARCHITECTURAL PLANS.
4. PROVIDE UL APPROVED FIRE STOP SYSTEM AT PENETRATIONS OF FIRE RATED WALLS AND FLOORS WITH BOTH "F" AND "T" RATINGS REQUIRED TO MAINTAIN THE RATING OF THE ASSEMBLIES.
5. LOW VOLTAGE DEVICES ARE SHOWN FOR REFERENCE ONLY. REFER TO LOW VOLTAGE DRAWINGS FOR EXACT QUANTITY, LOCATIONS AND SPECIFICATIONS PRIOR TO ROUGH-IN.
6. NEW RECEPTACLES/SWITCHES SHALL BE DECORA STYLE. COORDINATE ALL RECEPTACLE, SWITCHES AND COVER PLATE WITH ARCHITECT PRIOR TO PROCUREMENT.
7. ELECTRICAL CONTRACTOR SHALL PROVIDE AND INSTALL ALL NECESSARY CONDUIT SUPPORTS AND ACCESSORIES TO MEET NEC SUPPORT REQUIREMENTS FOR CONDUIT RUNS.
8. CONDUITS SHALL BE ROUTED TIGHT TO STRUCTURE ABOVE.

PLAN NOTES "X"

1 REFER TO ELEVATOR ELECTRICAL DETAIL AND NOTES ON DRAWING E6.1.2 FOR ADDITIONAL WORK.
2 PROVIDE WEATHERPROOF JUNCTION BOX FLUSH WITH FACE OF BUILDING WITH BLANK COVER PLATE AND 1/2" C.O. STUBBED INTO TENANT SPACE FOR FUTURE CONNECTION OF TENANT BUILDING MOUNTED SIGNAGE. ROUTE ADDITIONAL CONDUIT AND PULL LINE TO LCP FOR LANDLORD CONTROL OF TENANT SIGNAGE BRANCH CIRCUIT.
3 TENANT FEEDER CONDUIT. REFER TO SINGLE LINE DIAGRAM ON DRAWING E4.1.1 FOR ADDITIONAL INFORMATION.
4 PROVIDE 1" C.O., COMPLETE WITH PULL ROPES, FROM FIRE ALARM CONTROL PANEL (FACP) TO POINT ABOVE ACCESSIBLE CEILING SPACE IN TENANT SUITE FOR FIRE ALARM WIRING (BY OTHERS). ROUTE CONDUIT TIGHT TO STRUCTURE ABOVE.
5 PROVIDE 1" C.O., COMPLETE WITH PULL ROPES, FROM MAIN TELEPHONE BACKBOARD LOCATED ON LEVEL 2 TO POINT ABOVE ACCESSIBLE CEILING SPACE IN TENANT SUITE FOR LOW VOLTAGE WIRING (BY OTHERS). ROUTE CONDUIT TIGHT TO STRUCTURE ABOVE.
6 MECHANICAL EQUIPMENT PROVIDED BY MECHANICAL CONTRACTOR. COORDINATE REQUIREMENTS WITH MECHANICAL CONTRACTOR/PLANS PRIOR TO ROUGH-IN AND PROVIDE STARTERS AND ACCESSORIES REQUIRED FOR A COMPLETE INSTALLATION.
7 PROVIDE 208V, 30A, 2 POLE, NEMA 1 MOTOR RATED TOGGLE TYPE DISCONNECT SWITCH FOR FAN COIL UNIT. REFER TO MECHANICAL DRAWINGS FOR ADDITIONAL INFORMATION.
8 PROVIDE JUNCTION BOX FOR POWER CONNECTION TO PATIO HEATERS WITH 3/4" C.O. STUBBED INTO TENANT SPACE. JUNCTION BOXES AND CONDUIT TO BE CONCEALED ABOVE TRELLIS STRUCTURE. PATIO HEATERS TO BE CIRCUITED TO FUTURE TENANT PANELS (UNDER SEPARATE PERMIT).
9 PROVIDE JUNCTION BOX FOR POWER CONNECTION TO MOTOR SCREENS WITH 3/4" C.O. STUBBED INTO TENANT SPACE. JUNCTION BOXES AND CONDUIT TO BE CONCEALED ABOVE TRELLIS STRUCTURE. MOTOR SCREENS TO BE CIRCUITED TO FUTURE TENANT PANELS (UNDER SEPARATE PERMIT).

SMSARCHITECTS
100 Progress #250
Irvine, California 92618
949.757.3240 | www.sms-arch.com

CONSTANT
LINWOOD ENGINEERING INC
2301 dupont drive, suite 150
irvine, ca 92612 • 714.424.0001
www.linwoodengineering.com

DANA POINT HARBOR PARTNERS

PROJECT NAME
DANA POINT HARBOR COMMERCIAL CORE
BUILDING 12
1290 HARBOR WAY
DANA POINT, CA 92629

CLIENT
BURNHAM | WARD PROPERTIES
BWP

Robert J. Hatch, P.E.
CA # E16118

PROFESSIONAL ENGINEER
REGISTERED
ROBERT J. HATCH
No. E16118
ELECTRICAL
STATE OF CALIFORNIA
EXP. 12/31/25

No.	DATE	ISSUE
	06/01/2021	COUNTY SUBMITTAL
	09/24/2021	COUNTY RESUBMITTAL
	12/06/2022	50% DESIGN DEVELOPMENT
	02/10/2023	100% DESIGN DEVELOPMENT
	03/03/2023	50% CD PROGRESS SET
	04/21/2023	COUNTY RESUBMITTAL
A	07/24/2023	CITY RESUBMITTAL

DRAWINGS AND WRITTEN MATERIAL APPEARING HEREIN CONSTITUTE ORIGINAL AND UNPUBLISHED WORK OF SMS ARCHITECTS AND MAY NOT BE DUPLICATED, USED OR DISCLOSED WITHOUT WRITTEN CONSENT OF THE ARCHITECT

PROJECT NO 19019-12

DATE FEBRUARY 10, 2023

DRAWING TITLE
BUILDING 12 - LEVEL 2 - POWER PLAN

DRAWING NO.
E2.1.2

BIM 360://19274 Dana Point Harbor Revitalization_R21/19274 MEP Dana Point - Bldg 12 R21.rvt

10/11/2024 9:26:02 AM

CITY OF DANA POINT
PLANNING DIVISION

This plan has been reviewed for ZONING ONLY and meets the requirements of Title 9 of the Dana Point Municipal Code.

APPROVED KBN

DATE 10/21/24

COMMENTS BUILDING 12 (OC PERMIT PKG21-0516) PER CDP13-0018(I).

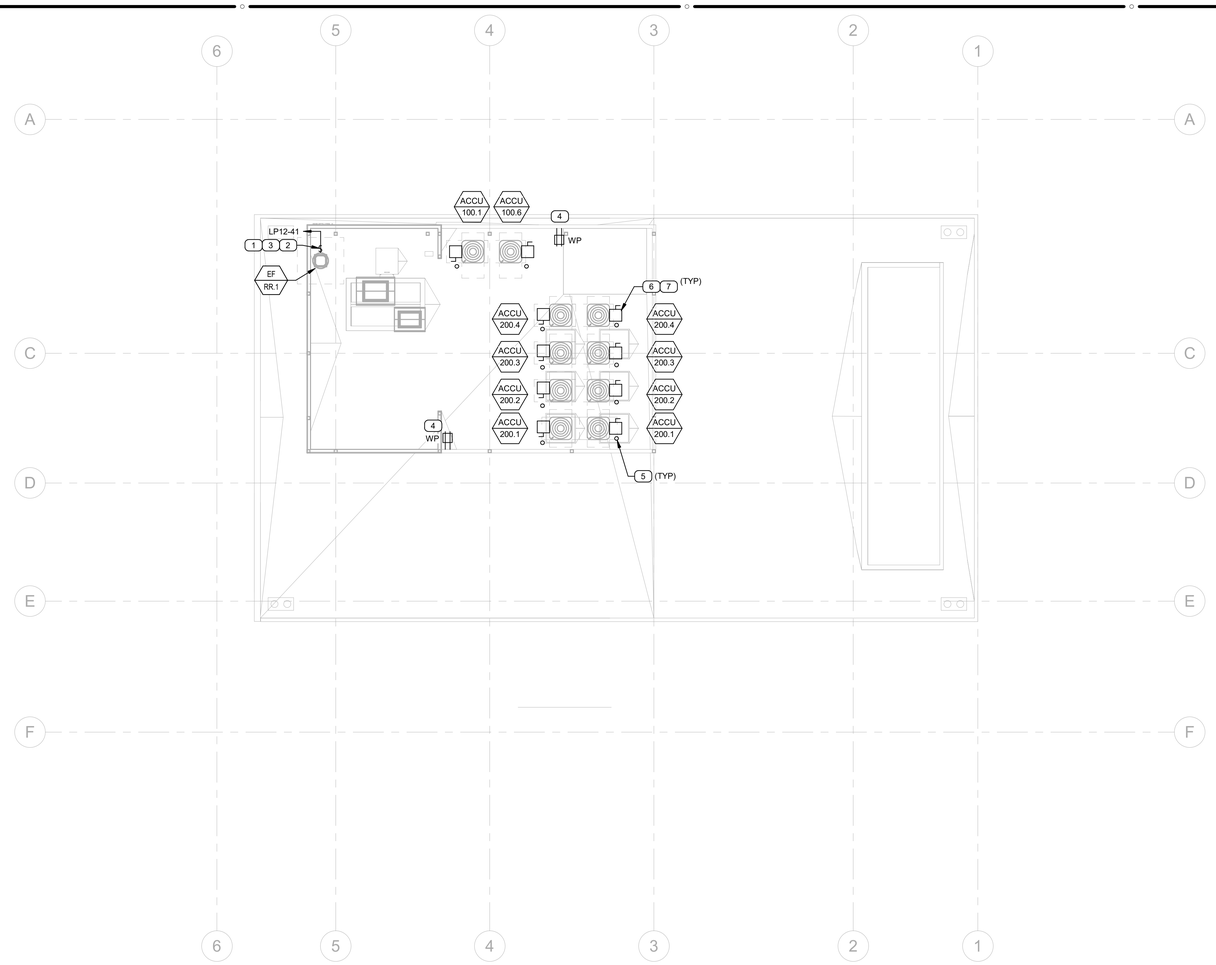

1 ROOF POWER PLAN
1/8" = 1'-0"

Zoning: CanningK 11/13/2024

Building&Safety: OCPWAzarvandB 12/22/2025

Permits: BNR21-0246, ELE21-0853, MEC21-0514, PLB21-0900

County of Orange - OC Public Works
OC Development Services
APPROVED

This set of plans and specifications must be kept on the job at all times. It is unlawful to make any changes or alterations to these plans without written permission from OC Public Works, OC Development Services of Orange County. The stamping of these plan specifications SHALL NOT be held to permit or be an approval of the violation of any provisions of any County Ordinance or State law.

Hani Tshetsiaev
BUILDING OFFICIAL

GENERAL NOTES

1. WIRING SHOWN TO REPRESENT 1#12H, 1#12N & 1#12GND UNLESS NOTED OTHERWISE BY PLAN NOTE, TICK MARKS OR FEEDER CALLOUT. PROVIDE SEPARATE NEUTRALS FOR ALL SINGLE-PHASE LOADS. MULTI-WIRE CIRCUITS SHARING NEUTRALS SHALL NOT BE UTILIZED.
2. REFER TO MECHANICAL AND PLUMBING PLANS FOR EXACT LOCATION OF HVAC AND PLUMBING EQUIPMENT AND RELATED DEVICES.
3. DEVICE AND RECEPTACLE ELEVATION SHOWN FOR REFERENCE. VERIFY EXACT LOCATIONS AND MOUNTING HEIGHTS OF DEVICES WITH ARCHITECTURAL PLANS.
4. PROVIDE UL APPROVED FIRE STOP SYSTEM AT PENETRATIONS OF FIRE RATED WALLS AND FLOORS WITH BOTH "F" AND "T" RATINGS REQUIRED TO MAINTAIN THE RATING OF THE ASSEMBLIES.
5. LOW VOLTAGE DEVICES ARE SHOWN FOR REFERENCE ONLY. REFER TO LOW VOLTAGE DRAWINGS FOR EXACT QUANTITY, LOCATIONS AND SPECIFICATIONS PRIOR TO ROUGH-IN.
6. NEW RECEPTACLES/SWITCHES SHALL BE DECORA STYLE. COORDINATE ALL RECEPTACLE, SWITCHES AND COVER PLATE WITH ARCHITECT PRIOR TO PROCUREMENT.
7. ELECTRICAL CONTRACTOR SHALL PROVIDE AND INSTALL ALL NECESSARY CONDUIT SUPPORTS AND ACCESSORIES TO MEET NEC SUPPORT REQUIREMENTS FOR CONDUIT RUNS.
8. CONDUITS SHALL BE ROUTED TIGHT TO STRUCTURE ABOVE.

PLAN NOTES "X"

1 MECHANICAL EQUIPMENT PROVIDED BY MECHANICAL CONTRACTOR. COORDINATE REQUIREMENTS WITH MECHANICAL CONTRACTOR/PLANS PRIOR TO ROUGH-IN AND PROVIDE STARTERS AND ACCESSORIES REQUIRED FOR A COMPLETE INSTALLATION.

2 PROVIDE 120V, 20A, WEATHERPROOF, MOTOR RATED SWITCH FOR CONNECTION TO EXHAUST FAN.

3 PROVIDE 1/2" C.O. STUBBED THROUGH ROOF TO ASSOCIATED THERMOSTAT FOR CONTROL WIRING. REFER TO "FLASHING DETAIL FOR PIPES 4" & SMALLER THRU ROOF" DETAIL ON DRAWING E6.1.1 FOR ADDITIONAL INFORMATION.

4 PROVIDE 120V, 20A, GFCI, WEATHERPROOF ROOF MOUNTED RECEPTACLE WITH BOBBLE COVER WITH 1/2" C.O. STUBBED THROUGH ROOF FOR FUTURE TENANT CONNECTION. REFER TO ROOFTOP RECEPTACLE MOUNTING DETAIL ON DRAWING E6.1.1 FOR ADDITIONAL INFORMATION.

5 PROVIDE 1" C.O. MINIMUM STUBBED THROUGH ROOF FOR FUTURE A/C UNIT CONTROL WIRING. REFER TO "FLASHING DETAIL FOR PIPES 4" & SMALLER THRU ROOF" DETAIL ON DRAWING E6.1.1 FOR ADDITIONAL INFORMATION.

6 PROVIDE 1" C.O. STUBBED THROUGH ROOF FROM DISCONNECT SWITCH FOR FUTURE A/C UNIT POWER WIRING (BY TENANT, UNDER SEPARATE PERMIT).

7 PROVIDE 208V, 60A, 2 POLE, NEMA 4X, FUSED DISCONNECT SWITCH WITH FLEXIBLE WHIP CONNECTION TO MECHANICAL UNIT. PROVIDE FUSES PER MANUFACTURER'S NAMEPLATE RATING.

SMSARCHITECTS
100 Progress #250
Irvine, California 92618
949.757.3240 | www.sms-arch.com

CONSTANT
LINWOOD ENGINEERING INC
230 dupont drive, suite 150
irvine, ca 92612 • 714.424.0003
www.linwoodengineering.com

DANA POINT HARBOR PARTNERS

PROJECT NAME
DANA POINT HARBOR COMMERCIAL CORE
BUILDING 12
1290 HARBOR WAY
DANA POINT, CA 92629

CLIENT
BWP PROPERTIES
BURNHAM | WARD

Robert J. Hatch, P.E.
CA # E16118
PROFESSIONAL ENGINEER
REGISTERED
E16118
ELECTRICAL
STATE OF CALIFORNIA
EXP. 12/31/25

No.	DATE	ISSUE
	06/01/2021	COUNTY SUBMITTAL
	09/24/2021	COUNTY RESUBMITTAL
	12/06/2022	50% DESIGN DEVELOPMENT
	02/10/2023	100% DESIGN DEVELOPMENT
	03/03/2023	50% CD PROGRESS SET
	04/21/2023	COUNTY RESUBMITTAL
A	07/24/2023	CITY RESUBMITTAL

DRAWINGS AND WRITTEN MATERIAL APPEARING HEREIN CONSTITUTE ORIGINAL AND UNPUBLISHED WORK OF SMS ARCHITECTS AND MAY NOT BE DUPLICATED, USED OR DISCLOSED WITHOUT WRITTEN CONSENT OF THE ARCHITECT

PROJECT NO. 19019-12

DATE FEBRUARY 10, 2023

DRAWING TITLE
BUILDING 12 - ROOF ELECTRICAL PLAN

DRAWING NO.
E2.1.3

CITY OF DANA POINT
PLANNING DIVISION

This plan has been reviewed for ZONING ONLY and meets the requirements of Title 9 of the Dana Point Municipal Code.

APPROVED KBN

DATE 10/21/24

COMMENTS BUILDING 12 (OC PERMIT PKG21-0516) PER CDP13-0018(I).

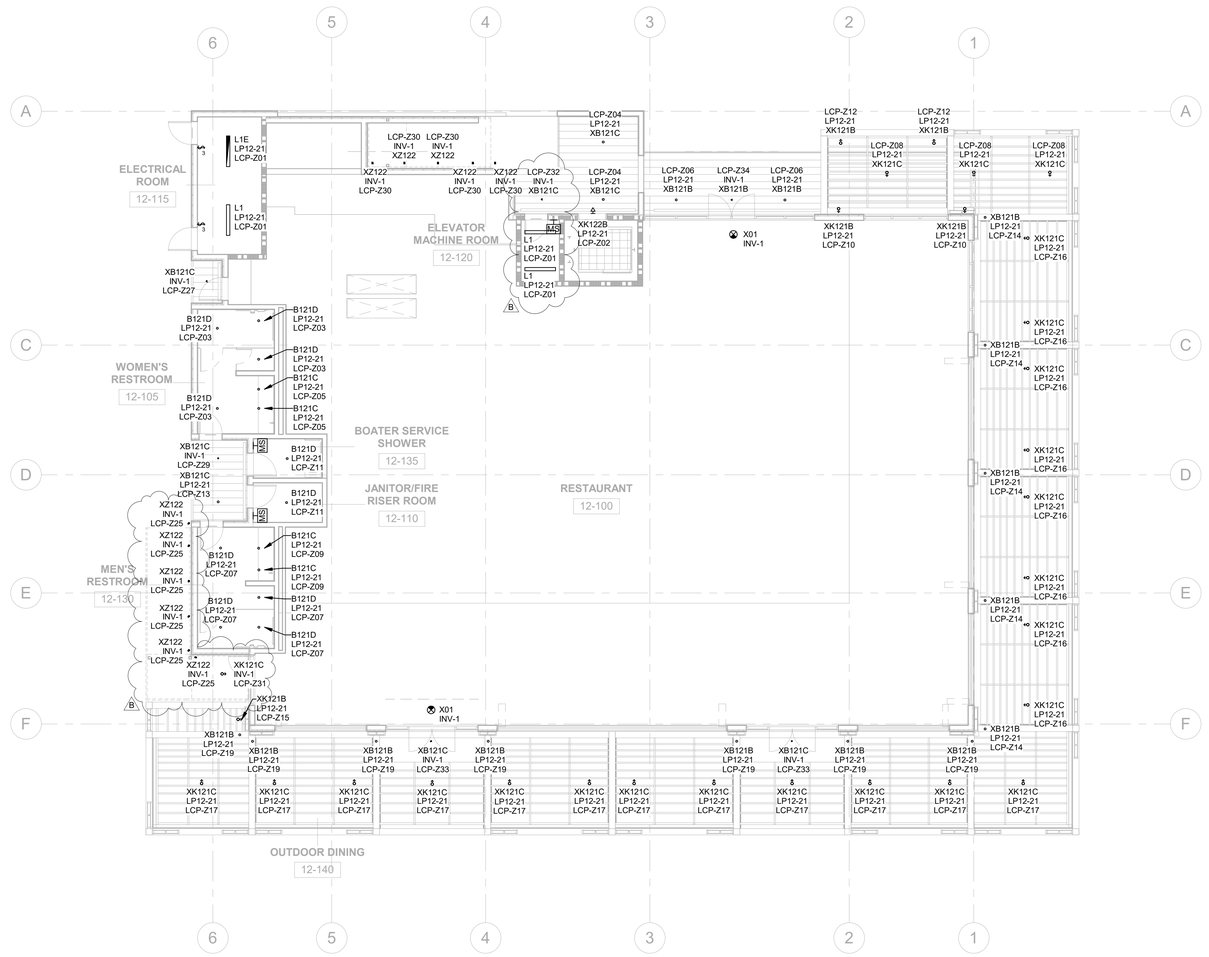

1 LEVEL 1 LIGHTING PLAN
1/8" = 1'-0"

Zoning: CanningK 11/13/2024

Building&Safety: OCPWAzarvandB 12/22/2025

Permits: BNR21-0246, ELE21-0853, MEC21-0514, PLB21-0900

County of Orange - OC Public Works
OC Development Services
APPROVED
This set of plans and specifications must be kept on the job at all times. It is unlawful to make any changes or alterations to these plans without written permission from OC Public Works, OC Development Services of Orange County. The stamping of these plan specifications SHALL NOT be held to permit or be an approval of the violation of any provisions of any County Ordinance or State law.
Hani Tohmtsbaes
BUILDING OFFICIAL

GENERAL NOTES

1. WIRING SHOWN TO REPRESENT 1#12H, 1#12N & 1#12GND UNLESS NOTED OTHERWISE BY PLAN NOTE, TICK MARKS OR FEEDER CALLOUT. PROVIDE SEPARATE NEUTRALS FOR SINGLE-PHASE LOADS. MULTI-WIRE CIRCUITS SHARING NEUTRALS SHALL NOT BE UTILIZED.
2. REFER TO ARCHITECTURAL REFLECTED CEILING PLANS, FLOOR PLANS AND ELEVATIONS FOR EXACT LIGHTING FIXTURE AND CONTROL DEVICE LOCATIONS, CEILING TYPES AND MOUNTING HEIGHTS.
3. ADJACENT SWITCHES SHALL BE PROVIDED UNDER A SINGLE COVER PLATE WITH BARRIERS FOR DIFFERENT VOLTAGES AS REQUIRED. VERIFY COLOR WITH ARCHITECT PRIOR TO PROCUREMENT.
4. PROVIDE UL APPROVED FIRE STOP SYSTEM AT PENETRATIONS OF FIRE RATED WALLS AND FLOORS WITH BOTH "F" AND "T" RATINGS REQUIRED TO MAINTAIN THE RATING OF THE ASSEMBLIES.
5. LOW VOLTAGE SWITCHES CONTROLLING CORRIDORS, LOBBIES, STAIRWELLS AND VESTIBULES SHALL BE LOCATED WITHIN NEAREST CORE ELECTRICAL ROOM.
6. FIXTURES SHOWN HATCHED ARE EGRESS LIGHTING AND SHALL BE POWERED THRU EMERGNECY LIGHTING INVERTER IN BUILDING CORE ELECTRICAL ROOM OR WITH INTEGRAL BATTERY BACKUPS, CAPABLE OF PROVIDING MINIMUM 90 MINUTE BACKUP POWER.
7. NEW RECEPTACLES/SWITCHES SHALL BE DECORA STYLE. COORDINATE RECEPTACLE, SWITCHES AND COVER PLATE WITH ARCHITECT PRIOR TO PROCUREMENT.
8. E.C. TO MEET LIGHTING CONTROL ACCEPTANCE REQUIREMENTS PER TITLE 24 130.4. A CERTIFICATE OF ACCEPTANCE SHALL BE SUBMITTED TO THE ENFORCEMENT AGENCY UNDER SECTION 10-103(a) OF PART 1 FOR:
   A. AUTOMATIC DAYLIGHT CONTROLS.
   B. LIGHTING CONTROLS
9. ALL LIGHTING IS TO BE DESIGNED AND LOCATED SO THAT LIGHT RAYS ARE AIMED DOWNWARD ONTO THE SITE THAT IS ATTACHED TO THE WATER-FACING ELEVATION OF THE BUILDING PER SECTION 5.5 (p) OF THE DANA POINT HARBOR DISTRICT REGULATION.

PLAN NOTES "X"

SMSARCHITECTS
100 Progress #250
Irvine, California 92618
949.757.3240 | www.sms-arch.com

CONSTANT
LINWOOD ENGINEERING INC
2301 dupont drive, suite 150
irvine, ca 92612 • 714.424.0001
www.linwoodengineering.com

DANA POINT HARBOR PARTNERS

PROJECT NAME
DANA POINT HARBOR COMMERCIAL CORE
BUILDING 12
1290 HARBOR WAY
DANA POINT, CA 92629

CLIENT
BWP PROPERTIES
BURNHAM|WARD

Robert J. Hatch, P.E.
CA # E16118

PROFESSIONAL ENGINEER
REGISTERED
ROBERT J. HATCH
E16118
ELECTRICAL
STATE OF CALIFORNIA

EXP. 12/31/25

No.	DATE	ISSUE
	06/01/2021	COUNTY SUBMITTAL
	09/24/2021	COUNTY RESUBMITTAL
	12/06/2022	50% DESIGN DEVELOPMENT
	02/10/2023	100% DESIGN DEVELOPMENT
	03/03/2023	50% CD PROGRESS SET
	04/21/2023	COUNTY RESUBMITTAL
A	07/24/2023	CITY RESUBMITTAL
B	10/11/2024	LIGHTING UPDATES

DRAWINGS AND WRITTEN MATERIAL APPEARING HEREIN CONSTITUTE ORIGINAL AND UNPUBLISHED WORK OF SMS ARCHITECTS AND MAY NOT BE DUPLICATED, USED OR DISCLOSED WITHOUT WRITTEN CONSENT OF THE ARCHITECT

PROJECT NO 19019-12

DATE FEBRUARY 10, 2023

DRAWING TITLE
BUILDING 12 - LEVEL 1 - LIGHTING PLAN

DRAWING NO.
E3.1.1

BIM 360://19274 Dana Point Harbor Revitalization_R21//19274 MEP Dana Point - Bldg 12 R21.rvt

10/11/2024 9:26:04 AM

CITY OF DANA POINT
PLANNING DIVISION

This plan has been reviewed for ZONING ONLY and meets the requirements of Title 9 of the Dana Point Municipal Code.

APPROVED KBN

DATE 10/21/24

COMMENTS BUILDING 12 (OC PERMIT PKG21-0516) PER CDP13-0018(I).

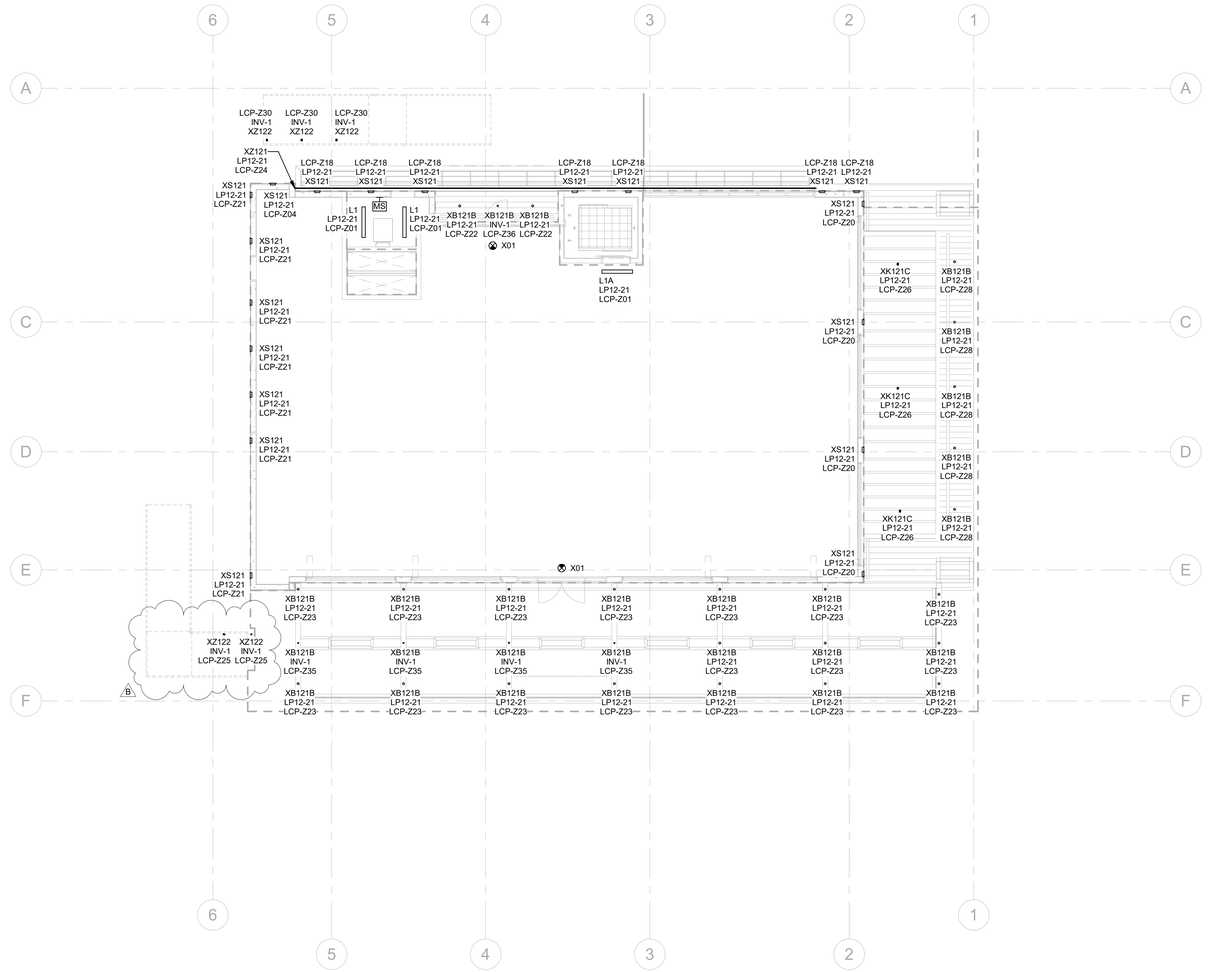

1 LEVEL 2 LIGHTING PLAN
1/8" = 1'-0"

Zoning: CanningK 11/13/2024

Building&Safety: OCPWAzarvandB 12/22/2025

Permits: BNR21-0246, ELE21-0853, MEC21-0514, PLB21-0900

County of Orange - OC Public Works
OC Development Services
APPROVED

This set of plans and specifications must be kept on the job at all times. It is unlawful to make any changes or alterations to these plans without written permission from OC Public Works, OC Development Services of Orange County. The stamping of these plan specifications SHALL NOT be held to permit or be an approval of the violation of any provisions of any County Ordinance or State law.

Hind Tshetshaane
BUILDING OFFICIAL

GENERAL NOTES

1. WIRING SHOWN TO REPRESENT 1#12H, 1#12N & 1#12GND UNLESS NOTED OTHERWISE BY PLAN NOTE, TICK MARKS OR FEEDER CALLOUT. PROVIDE SEPARATE NEUTRALS FOR SINGLE-PHASE LOADS. MULTI-WIRE CIRCUITS SHARING NEUTRALS SHALL NOT BE UTILIZED.
2. REFER TO ARCHITECTURAL REFLECTED CEILING PLANS, FLOOR PLANS AND ELEVATIONS FOR EXACT LIGHTING FIXTURE AND CONTROL DEVICE LOCATIONS, CEILING TYPES AND MOUNTING HEIGHTS.
3. ADJACENT SWITCHES SHALL BE PROVIDED UNDER A SINGLE COVER PLATE WITH BARRIERS FOR DIFFERENT VOLTAGES AS REQUIRED. VERIFY COLOR WITH ARCHITECT PRIOR TO PROCUREMENT.
4. PROVIDE UL APPROVED FIRE STOP SYSTEM AT PENETRATIONS OF FIRE RATED WALLS AND FLOORS WITH BOTH "F" AND "T" RATINGS REQUIRED TO MAINTAIN THE RATING OF THE ASSEMBLIES.
5. LOW VOLTAGE SWITCHES CONTROLLING CORRIDORS, LOBBIES, STAIRWELLS AND VESTIBULES SHALL BE LOCATED WITHIN NEAREST CORE ELECTRICAL ROOM.
6. FIXTURES SHOWN HATCHED ARE EGRESS LIGHTING AND SHALL BE POWERED THRU EMERGNECY LIGHTING INVERTER IN BUILDING CORE ELECTRICAL ROOM OR WITH INTEGRAL BATTERY BACKUPS, CAPABLE OF PROVIDING MINIMUM 90 MINUTE BACKUP POWER.
7. NEW RECEPTACLES/SWITCHES SHALL BE DECORA STYLE. COORDINATE RECEPTACLE, SWITCHES AND COVER PLATE WITH ARCHITECT PRIOR TO PROCUREMENT.
8. E.C. TO MEET LIGHTING CONTROL ACCEPTANCE REQUIREMENTS PER TITLE 24 130.4. A CERTIFICATE OF ACCEPTANCE SHALL BE SUBMITTED TO THE ENFORCEMENT AGENCY UNDER SECTION 10-103(a) OF PART 1 FOR:
   A. AUTOMATIC DAYLIGHT CONTROLS.
   B. LIGHTING CONTROLS
9. ALL LIGHTING IS TO BE DESIGNED AND LOCATED SO THAT LIGHT RAYS ARE AIMED DOWNWARD ONTO THE SITE THAT IS ATTACHED TO THE WATER-FACING ELEVATION OF THE BUILDING PER SECTION 5.5 (p) OF THE DANA POINT HARBOR DISTRICT REGULATION.

PLAN NOTES "X"

SMSARCHITECTS
100 Progress #250
Irvine, California 92618
949.757.3240 | www.sms-arch.com

CONSTANT
LINWOOD ENGINEERING INC
2301 dupont drive, suite 150
irvine, ca 92612 • 714.424.0001
www.linwoodengineering.com

DANA POINT HARBOR PARTNERS

PROJECT NAME
DANA POINT HARBOR COMMERCIAL CORE
BUILDING 12
1290 HARBOR WAY
DANA POINT, CA 92629

CLIENT
BWP PROPERTIES
BURNHAM|WARD

Robert J. Hatch, P.E.
CA # E16118

PROFESSIONAL ENGINEER
REGISTERED
E16118
ELECTRICAL
STATE OF CALIFORNIA
EXP. 12/31/25

No.	DATE	ISSUE
	06/01/2021	COUNTY SUBMITTAL
	09/24/2021	COUNTY RESUBMITTAL
	12/06/2022	50% DESIGN DEVELOPMENT
	02/10/2023	100% DESIGN DEVELOPMENT
	03/03/2023	50% CD PROGRESS SET
	04/21/2023	COUNTY RESUBMITTAL
A	07/24/2023	CITY RESUBMITTAL
B	10/11/2024	LIGHTING UPDATES

DRAWINGS AND WRITTEN MATERIAL APPEARING HEREIN CONSTITUTE ORIGINAL AND UNPUBLISHED WORK OF SMS ARCHITECTS AND MAY NOT BE DUPLICATED, USED OR DISCLOSED WITHOUT WRITTEN CONSENT OF THE ARCHITECT

PROJECT NO 19019-12

DATE FEBRUARY 10, 2023

DRAWING TITLE
BUILDING 12 - LEVEL 2 - LIGHTING PLAN

DRAWING NO.
E3.1.2

BIM 360://19274 Dana Point Harbor Revitalization_R21/19274 MEP Dana Point - Bldg 12 R21.rvt

10/11/2024 9:26:05 AM

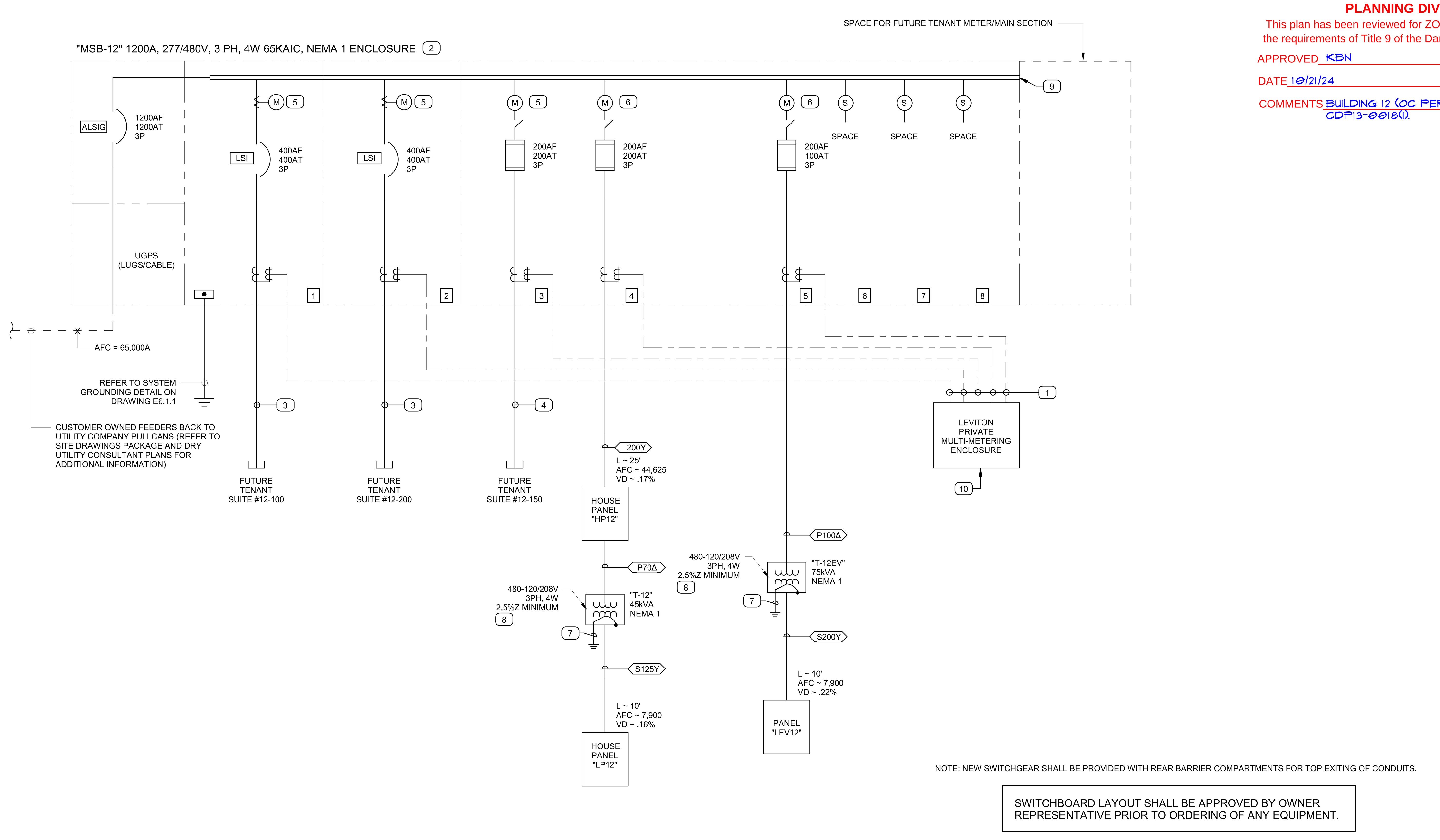

NOTE: NEW SWITCHGEAR SHALL BE PROVIDED WITH REAR BARRIER COMPARTMENTS FOR TOP EXITING OF CONDUITS.

SWITCHBOARD LAYOUT SHALL BE APPROVED BY OWNER REPRESENTATIVE PRIOR TO ORDERING OF ANY EQUIPMENT.

3 BLDG 12 SINGLE LINE DIAGRAM
12" = 1'-0"

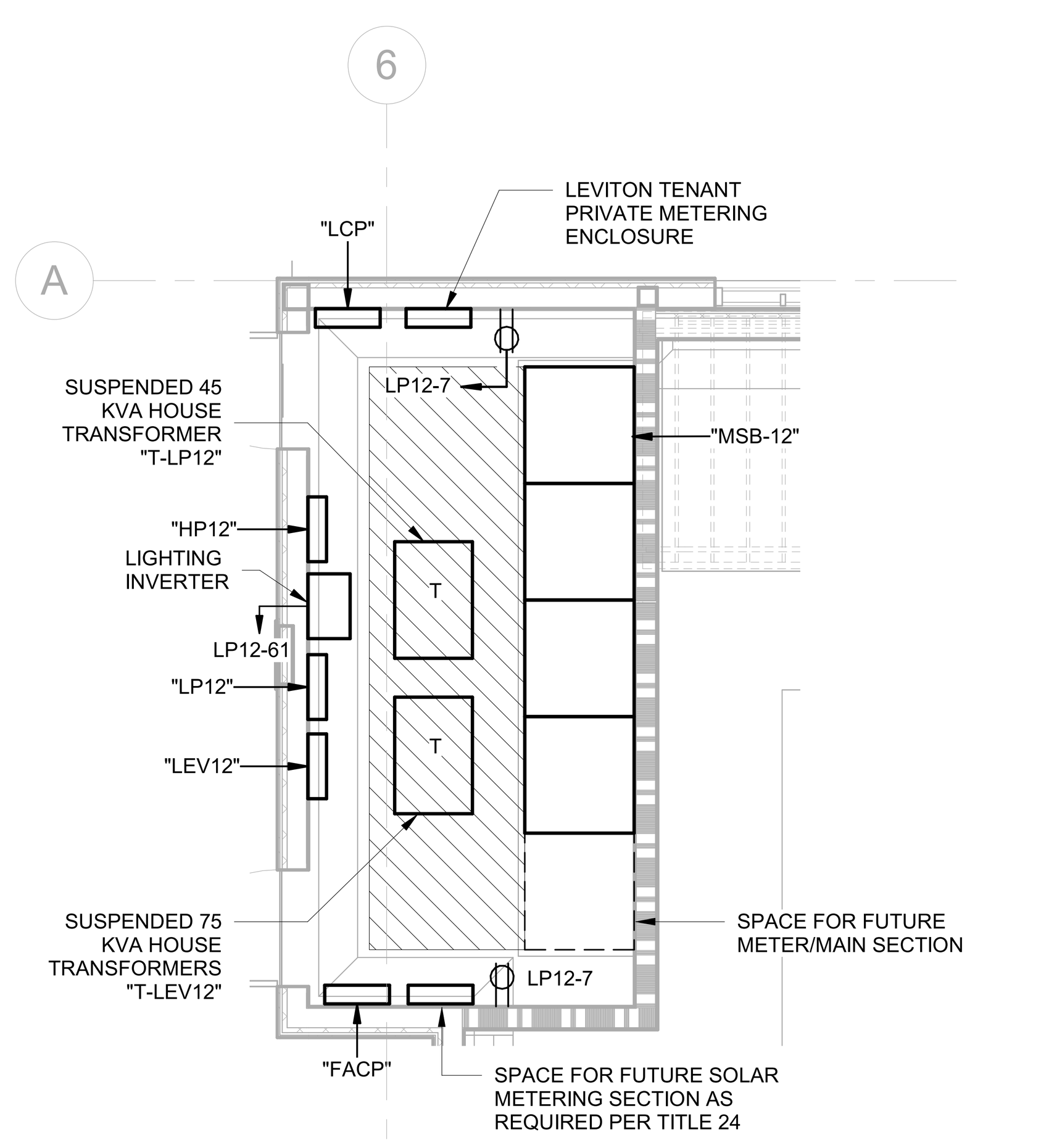

1 ENLARGED ELECTRICAL ROOM
1/4" = 1'-0"

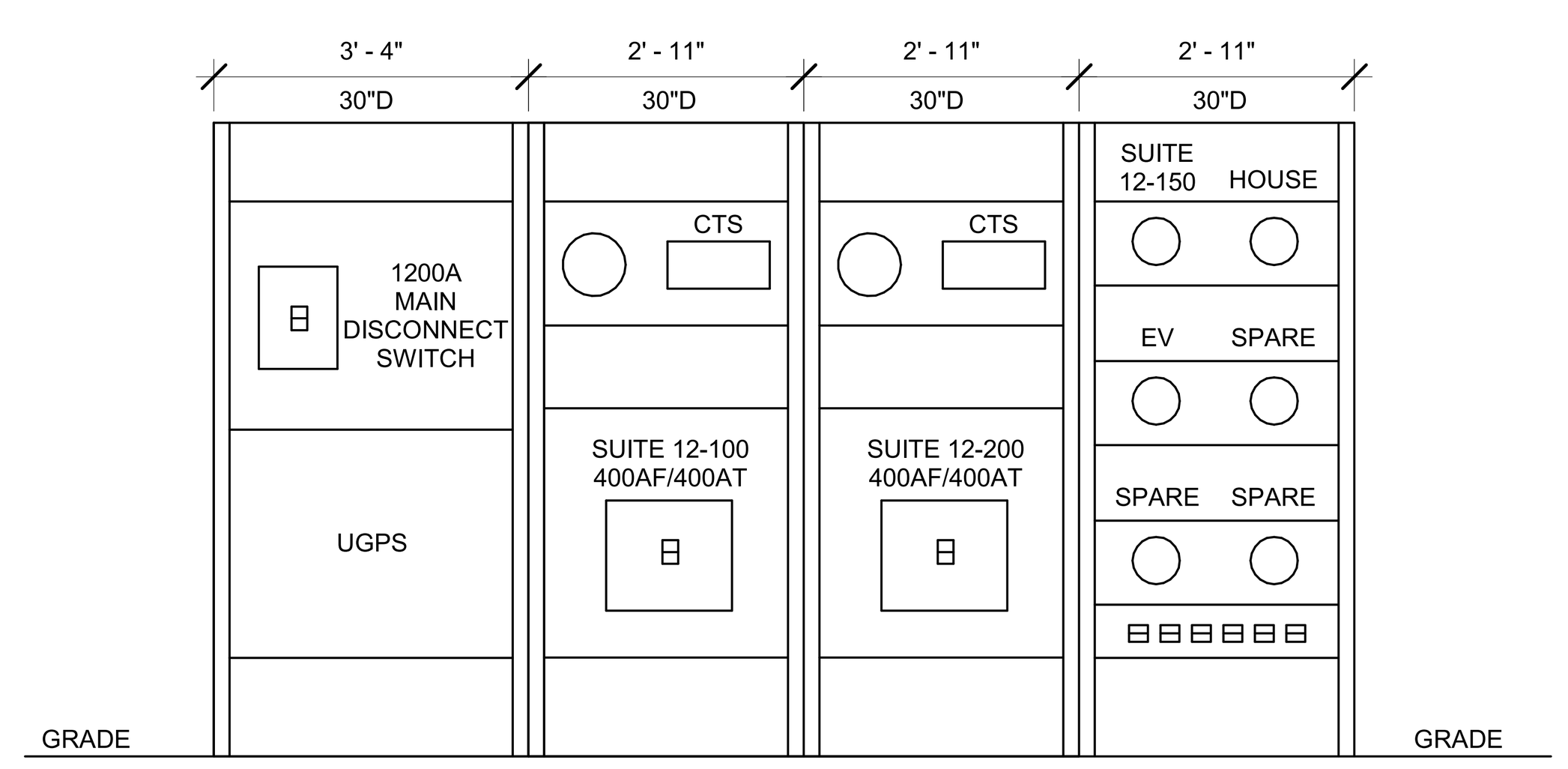

NOTE:
- SWITCHGEAR IS NEMA 1 RATED.
- NEW SWITCHGEAR SHALL BE PROVIDED WITH REAR BARRIER COMPARTMENTS FOR TOP EXISTING OF CONDUITS.

2 MSB - BUILDING 12 ELEVATION
N.T.S.

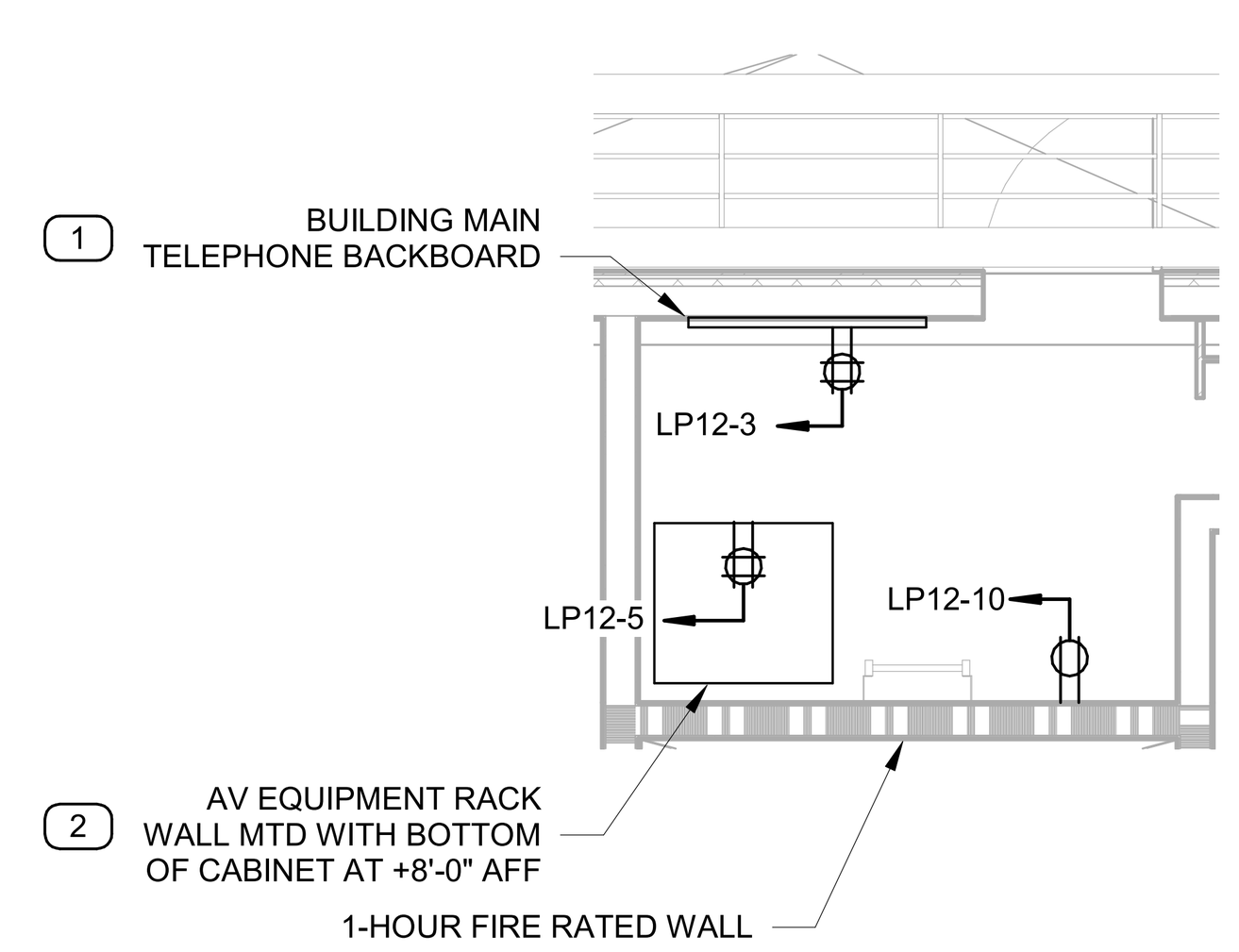

5 ENLARGED MPOE ROOM
1/4" = 1'-0"

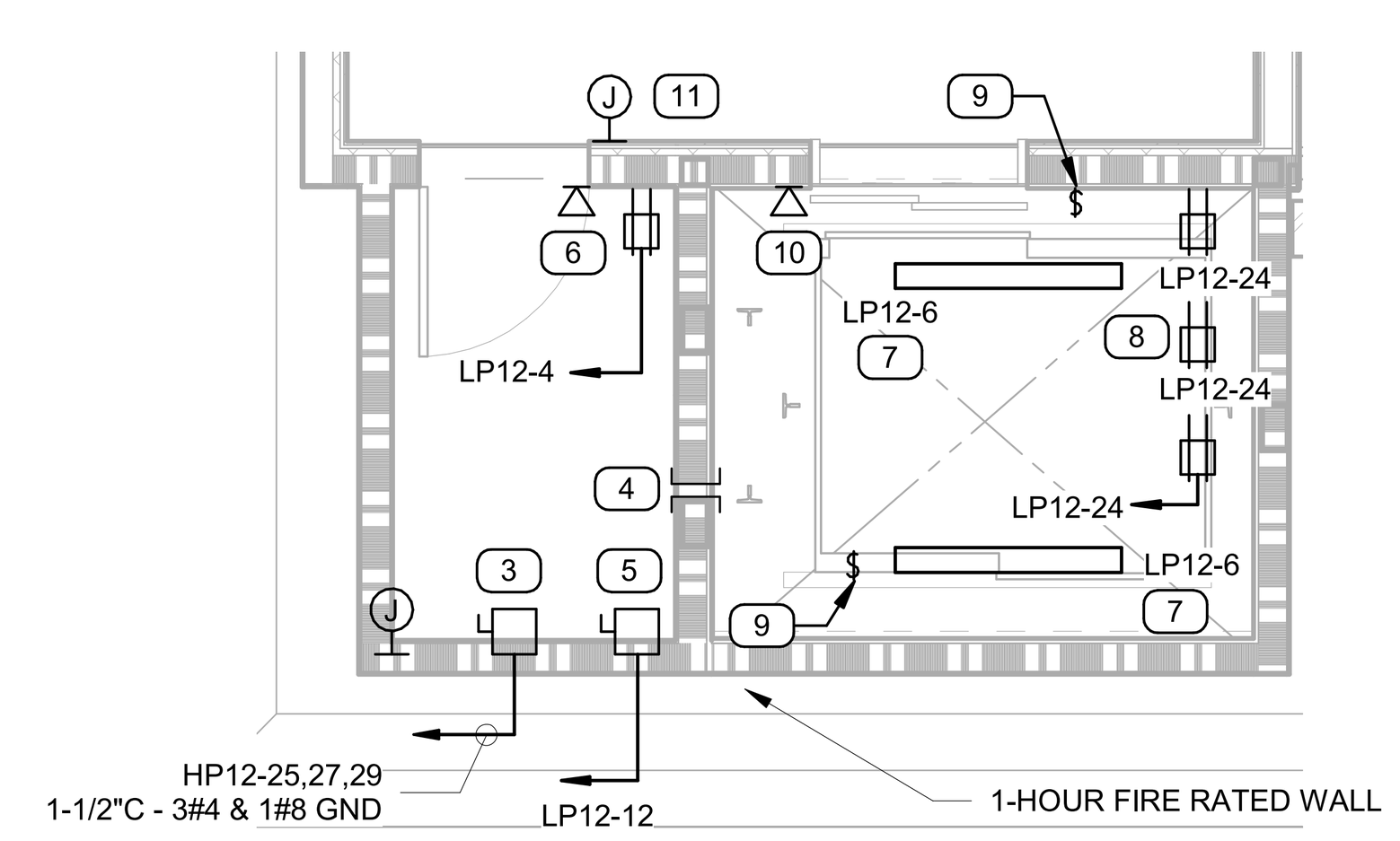

6 ENLARGED ELEVATOR MACHINE ROOM & PIT/SHAFT
1/4" = 1'-0"

Dana Point Harbor Revitalization - "MSB-12" Service Load Calc					
Tenant Information	Area (sq.ft)	W/sq.ft	KW	Amps	Service Size
Space 12-100 (Restaurant)	5,091	60	305.46	367.58	400A
Space 12-150 (Restaurant)	845	60	50.70	61.01	200A
Space 12-200 (Restaurant)	3,587	60	215.22	258.99	400A
EV Charging Panel "LEV12"			28.80	34.66	100A
House Panel "HP12" (House Meter)			47.70	83.03	200A
Public Restrooms (Included in House Loads Above)	474				
Misc Site Power (Included in amps load above)			21.30		
Future Capacity (25% of Tenant Loads)			142.85	171.82	
Total @ 480/277V, 3-phase, 4W			812.03	977.09	

CITY OF DANA POINT
PLANNING DIVISION
This plan has been reviewed for ZONING ONLY and meets the requirements of Title 9 of the Dana Point Municipal Code.
APPROVED KBN
DATE 10/21/24
COMMENTS BUILDING 12 (OC PERMIT PKG21-0516) PER CDP13-0018(I).

PLAN NOTES "X"

1 PROVIDE NEW MAIN TELEPHONE BACKBOARD PER UTILITY COMPANY REQUIREMENTS.
2 PROVIDE QUAD RECEPTACLE WITHIN WALL MOUNTED AV EQUIPMENT RACK FOR CONNECTION OF EQUIPMENT WITHIN RACK. VERIFY EXACT MOUNTING HEIGHT WITH OWNER IN FIELD PRIOR TO INSTALLATION.
3 PROVIDE A LOCKABLE 100AMP/3-POLE FUSED ELEVATOR DISCONNECT SWITCH WITH DUAL ELEMENT FUSES SIZED BY MANUFACTURER, SHUNT TRIP MECHANISM AND CONNECTION TO ELEVATOR CONTROLLER. PROVIDE WITH (2) NORMALLY OPEN/CLOSED SETS OF CONTACTS FOR ANTI-POWER OUTAGE ENTRAPMENT OPTION.
4 PROVIDE SLEEVE PENETRATION INTO HOISTWAY PER ELEVATOR SHOP DRAWINGS.
5 PROVIDE A 30AMP LOCKABLE NON-FUSED DISCONNECT SWITCH WITH GFI PROTECTED BRANCH CIRCUIT AND CONNECTION TO ELEVATOR CAR LIGHTS AND FAN. PROVIDE ENGRAVED NAMEPLATE STATING "ELEVATOR CAB LIGHTS".
6 PROVIDE DEDICATED HOT PHONE LINE IN ELEVATOR MACHINE ROOM FOR PHONE IN ELEVATOR CAB.
7 PROVIDE LED ENCLOSED STRIP LIGHT FIXTURE TYPE "L1". LIGHT LEVELS AT THE BOTTOM OF THE PIT AND TOP OF CAB SHALL BE MINIMUM 20FC.
8 PROVIDE NEMA 4 RATED CONVENIENCE "GFI" RECEPTACLES IN PIT AND EACH ACCESSIBLE HOIST WAY ACCESS LOCATION WITH DEDICATED BRANCH CIRCUIT. AT A MINIMUM HALFWAY UP THE HOISTWAY AND AT TOP FLOOR.
9 PROVIDE NEMA 4 RATED MULTIWAY LIGHT SWITCH IN PIT AND EACH ACCESSIBLE HOIST WAY ACCESS WHERE LIGHTS ARE INSTALLED. PIT LEVEL SWITCH SHALL BE 42" ABOVE SEAL PLATE AND ADJACENT TO LADDER.
10 PROVIDE BACKBOX, CONDUIT AND DEDICATED PHONE OUTLET IN THE PIT.
11 PROVIDE ADDRESSABLE RELAY MODULE AND POWER FOR SHUNT TRIP OPERATION OF ELEVATOR DISCONNECT SWITCH, AND ADDRESSABLE MONITOR MODULE FOR SHUNT TRIP CIRCUIT. HEAT DETECTOR SHALL SIGNAL FIRE ALARM CONTROL PANEL AND RELAY MODULE TO OPEN ELEVATOR DISCONNECT VIA SHUNT TRIP CONTACTOR.

Zoning: CanningK 11/13/2024
Building&Safety: OCPWAzarvandB 12/22/2025
Permits: BNR21-0246, ELE21-0853, MEC21-0514, PLB21-0900

County of Orange - OC Public Works
OC Development Services
APPROVED
This set of plans and specifications must be kept on the job at all times. It is unlawful to make any changes or alterations to these plans without written permission from OC Public Works, OC Development Services of Orange County. The stamping of these plan specifications SHALL NOT be held to permit or be an approval of the violation of any provisions of any County Ordinance or State law.
Hadi Tabatabaee
BUILDING OFFICIAL

GENERAL NOTES

1. VERIFY POWER SUPPLY LOCATIONS AND CONFORM TO THE REQUIREMENTS OF THE LANDLORD AND POWER COMPANY. POWER COMPANY SHALL BE CONTACTED PRIOR TO BEGINNING CONSTRUCTION TO ARRANGE AND VERIFY THE INSTALLATION OF POWER COMPANY METER.
2. GROUND EQUIPMENT AND SERVICES IN ACCORDANCE WITH ARTICLE 250 AND 517 OF THE NATIONAL ELECTRICAL CODE, LOCAL APPLICABLE CODES, AND AS INDICATED ON DRAWINGS. CONDUIT SHALL HAVE AN EQUIPMENT GROUNDING CONDUCTOR. THE GROUNDING CONDUCTOR SHALL BE BONDED TO THE METAL FRAMES OF FIXED ELECTRICAL EQUIPMENT.
3. MAKE THE NECESSARY INSPECTIONS OF EXISTING SITE, POWER SUPPLY LOCATION, ROUTING, AND POWER CO. SERVICE AS REQUIRED FOR THIS WORK AND MAKE ALLOWANCE FOR EXISTING CONDITIONS BEFORE SUBMITTING BID.
4. CUT AND PATCH THE CONSTRUCTION WORK AS REQUIRED FOR PROPER INSTALLATION OF THE ELECTRICAL WORK. PATCHING SHALL MATCH THE SURROUNDING WORK TO THE SATISFACTION OF THE ARCHITECT. CONDUIT SHALL BE INSTALLED CONCEALED UNLESS SPECIFICALLY APPROVED BY THE ARCHITECT. COORDINATE SAW CUTTING WITH LANDLORD'S REPRESENTATIVE.
5. PROVIDE ENGRAVED LAMINATED PHENOLIC BLACK-ON-WHITE (UNLESS NOTED OTHERWISE) NAMEPLATES SECURED TO EQUIPMENT WITH ADHESIVE AND SCREWS FOR PANELBOARDS, RELAY CABINETS, TRANSFORMERS, DISTRIBUTION BOARDS, AND MAIN SWITCHBOARD - IDENTIFYING EQUIPMENT DESIGNATION (CORRESPONDING WITH DESIGNATION USED ON DRAWINGS), EQUIPMENT VOLTAGE. SOURCE LETTERING SHALL BE 1/4" HIGH. PROVIDE LABELS FOR CIRCUIT BREAKERS, FUSIBLE SWITCHES AND STARTERS IN SWITCHBOARDS AND DISTRIBUTION BOARDS FOR EACH DEVICE IDENTIFYING EQUIPMENT CONTROLLED. LETTERING SHALL BE 1/8" HIGH.
6. DEVICES SHALL HAVE AN INTERRUPTING CAPACITY NOT LESS THAN THE POWER COMPANY AVAILABLE FAULT CURRENT, OR AS INDICATED ON THE DRAWINGS WHICHEVER IS GREATER.
7. AVAILABLE SPACE FOR SWITCHBOARDS IS LIMITED. SWITCHBOARDS MUST FIT IN ALLOCATED SPACE.
8. CIRCUIT BREAKERS (MAIN SWITCHBOARD, DISTRIBUTION PANELS, PANELBOARDS) SHALL BE FULLY RATED FOR AIC AS NOTED ON SINGLE LINE DIAGRAM AND PACEL SCHEDULES, UNLESS NOTED OTHERWISE.

SLD PLAN NOTES

1. PROVIDE 1#12 CU THWN WIRE PER PHASE AT EACH UTILITY METER SECTION FOR CT WIRING BACK TO PRIVATE TENANT METERING ENCLOSURE IN ELECTRICAL ROOM. WIRING SHALL BE ROUTED BETWEEN SWITCHBOARD AND METERING ENCLOSURE WITHIN CONDUIT.
2. SWITCHGEAR SHALL BE PROVIDED WITH COPPER BUSSING, MARINE GRADE FINISH AND STAINLESS STEEL FASTENERS.
3. PROVIDE (2) 2"C.O. (RUN IN PARALLEL), COMPLETE WITH PULL ROPES, FROM "MSB-12" TO POINT ABOVE ACCESSIBLE CEILING SPACE IN TENANT SPACE INDICATED AND CAP FOR FUTURE TENANT USE. CONDUIT SHALL BE ROUTED TIGHT TO STRUCTURE ABOVE.
4. PROVIDE 4"C.O., COMPLETE WITH PULL ROPE, FROM "MSB-12" TO POINT ABOVE ACCESSIBLE CEILING SPACE IN TENANT SPACE INDICATED AND CAP FOR FUTURE TENANT USE. CONDUIT SHALL BE ROUTED TIGHT TO STRUCTURE ABOVE.
5. TENANT SHALL BE RESPONSIBLE FOR CONTACTING UTILITY COMPANY AND SETTING OF METER.
6. ELECTRICAL CONTRACTOR SHALL CONTACT UTILITY COMPANY AND ARRANGE FOR SETTING OF METER FOR LANDLORD'S HOUSE SYSTEM.
7. PROVIDE 3/4"C-1#4 CU TO EFFECTIVELY GROUNDED STRUCTURAL METAL MEMBER OF THE STRUCTURE AND COLD WATER PIPE PER SECTION 250 OF THE NEC. REFER TO "DRY TYPE TRANSFORMER GROUNDING DETAIL" ON DRAWING E6.1.1 FOR ADDITIONAL INFORMATION.
8. TRANSFORMER SHALL BE COMPLETELY ENCLOSED EXCEPT FOR VENTILATING OPENINGS AND BE PROVIDED WITH CLASS 155 OR HIGHER INSULATION SYSTEM.
9. PROVIDE EXTENDABLE BUSSING AND BLANK COVER PLATE AT END OF SWITCHGEAR FOR FUTURE EXPANSION.
10. PROVIDE VERIFEYE SERIES 8000 MULTIPLE METR UNIT BY LEVITON #277WH-241 AND ALL CT'S AS REQUIRED FOR A COMPLETE INSTALLATION. SINGLE ENCLOSURE SHALL CONTAIN ALL PRIVATE METERS FOR EACH TENANT SPACE AS REQUIRED PER TITLE 24 SECTION 130.5(A).

SMS ARCHITECTS
100 Progress #250
Irvine, California 92618
949.757.3240 | www.sms-arch.com

CONSTANT
LINWOOD ENGINEERING INC
2301 dupont drive, suite 150
irvine, ca 92612 • 714.424.0001
www.linwoodengineering.com

DANA POINT HARBOR PARTNERS

PROJECT NAME:
DANA POINT HARBOR COMMERCIAL CORE
BUILDING 12
1290 HARBOR WAY
DANA POINT, CA 92629

CLIENT
BWP BURNHAM | WARD PROPERTIES

Robert J. Hatch, P.E.
CA # E16118
REGISTERED PROFESSIONAL ENGINEER ROBERT J. HATCH E16118 ELECTRICAL STATE OF CALIFORNIA
EXP. 12/31/25

No.	DATE	ISSUE
	06/01/2021	COUNTY SUBMITTAL
	09/24/2021	COUNTY RESUBMITTAL
	12/06/2022	50% DESIGN DEVELOPMENT
	02/10/2023	100% DESIGN DEVELOPMENT
	03/03/2023	50% CD PROGRESS SET
	04/21/2023	COUNTY RESUBMITTAL
A	07/24/2023	CITY RESUBMITTAL

DRAWINGS AND WRITTEN MATERIAL APPEARING HEREIN CONSTITUTE ORIGINAL AND UNPUBLISHED WORK OF SMS ARCHITECTS AND MAY NOT BE DUPLICATED, USED OR DISCLOSED WITHOUT WRITTEN CONSENT OF THE ARCHITECT

PROJECT NO. 19019-12
DATE FEBRUARY 10, 2023
DRAWING TITLE
BUILDING 12 - SINGLE LINE DIAGRAM & ENLARGED PLANS
DRAWING NO.
E4.1.1

TYPE	B121C	B121D	L1	L1A	L1E	XB121B	XB121C
MANUFACTURER	ALPHABET	ALPHABET	LITHONIA	LITHONIA	LITHONIA	TARGETTI LIGHTING	TARGETTI LIGHTING
CATALOG #	NU4-RD-XTM19-10LM-27K-98-HE40-UNV-DIM10-NC-WH-WH-MARINE GRADE FINISH	NU4-RD-XTM19-10LM-27K-98-HE80-UNV-DIM10-NC-WH-WH-MARINE GRADE FINISH	CLX-L48-4000LM-SEF-FDL-W-MVOLT-GZ10-35K-80CRI-[FINSIH]-[MOUNTING]	CLX-L48-4000LM-SEF-FDL-W-MVOLT-GZ10-35K-80CRI-[FINISH]-[MOUNTING]-MSD7	CLX-L48-4000LM-SEF-FDL-W-MVOLT-GZ10-35K-80CRI-[FINSIH]-[MOUNTING]	JU-R-SP-L1-27-24-TBD-MARINE GRADE FINISH, 1US3175M, DMLExx1242UD, DOWNLIGHT MOUNTING HARDWARE AS REQUIRED.	JU-R-FL-L1-27-24-TBD-MARINE GRADE FINISH, 1US3175M, DMLExx1242UD, DOWNLIGHT MOUNTING HARDWARE AS REQUIRED.
LAMP/CATALOG#	2700K 98CRI WARM WHITE LED (SUPPLIED WITH LUMINAIRE)	2700K 98CRI WARM WHITE LED (SUPPLIED WITH LUMINAIRE)	3500K 80CRI 4000LM	3500K 80 CRI 4000 LM	3500K 80CRI 4000LM	2700K WARM WHITE LED (SUPPLIED WITH LUMINAIRE)	2700K WARM WHITE LED (SUPPLIED WITH LUMINAIRE)
LUMINAIRE WATTAGE	16	16	27.5.	27.5	27.5	7	7
DESCRIPTION	RECESS MOUNTED 3000K WARM WHITE LED DOWNLIGHT WITH 40 DEGREE OPTIC. WHITE TRIM. CONTRACTOR TO PAINT TRIM TO MATCH CEILING.	RECESS MOUNTED 3000K WARM WHITE LED DOWNLIGHT WITH 80 DEGREE OPTIC. WHITE TRIM. CONTRACTOR TO PAINT TRIM TO MATCH CEILING.	4' LINEAR LED STRIPLIGHT WITH FLAT WIDE DIFFUSE LENDS AND 0-10V DIMMING DRIVER. PROVIDE WITH CEILING SURFACE MOUNT OPTION OR CHAIN HUNG PENDANT OPTION AS REQUIRED.	SIMILAR TO LUMINAIRE TYPE "L1" EXCEPT WITH INTEGRAL OCCUPANCY SENSOR.	SIMILAR TO LUMINAIRE TYPE "L1" EXCEPT WITH BATTERY PACK CAPABLE OF PROVIDING 90 MINUTES OF EMERGENCY POWER.	RECESS MOUNTED LOW VOLTAGE 2700K WARM WHITE LED DOWNLIGHT WITH 21 DEGREE OPTICS. MARINE GRADE FINISH PER ARCHITECT.	RECESS MOUNTED LOW VOLTAGE 2700K WARM WHITE LED DOWNLIGHT WITH 39 DEGREE OPTICS. MARINE GRADE FINISH PER ARCHITECT.
NOTES	REQUIRES DIMMING OCCUPANCY SENSOR CONTROL	REQUIRES DIMMING OCCUPANCY SENSOR CONTROL	CONFIRM FINISH AND MOUTNING CONFIGURATION WITH ARCHITECT.	CONFIRM FINISH AND HOUSING WITH ARCHITECT.	CONFIRM FINISH AND MOUTNING CONFIGURATION WITH ARCHITECT.	FIXTURE TO BE INSTALLED IN DOWNLIGHT ORIENTATION. REQUIRES REMOTE POWER SUPPLY. REQUIRES 0-10V DIMMING.	FIXTURE TO BE INSTALLED IN DOWNLIGHT ORIENTATION. REQUIRES REMOTE POWER SUPPLY. REQUIRES 0-10V DIMMING.
VOLTS	120-277	120-277	120-277	120-277	120-277	120-277/24	120-277/24
CONTACT	JEFF WARUNEK PERFORMANCE LIGHTING PHONE: 949 246 9736 EMAIL: jeffw@performanceltg.com	JEFF WARUNEK PERFORMANCE LIGHTING PHONE: 949 246 9736 EMAIL: jeffw@performanceltg.com				JEFF WARUNEK PERFORMANCE LIGHTING PHONE: 949 246 9736 EMAIL: jeffw@performanceltg.com	JEFF WARUNEK PERFORMANCE LIGHTING PHONE: 949 246 9736 EMAIL: jeffw@performanceltg.com
LAMP WATTAGE	16	16	27.5	27.5	27.5	7	7

TYPE	XK121B	XK121C	XK122B	XS121	XZ121	XZ122
MANUFACTURER	TARGETTI LIGHTING	TARGETTI LIGHTING	HEVI LITE	TESLYTE	DURALAMP	ALPHABET
CATALOG #	JP-R-TBD-FL-L1-27-24-MARINE GRADE FINISH, WITH DMLExx1242UD	JP-R-TBD-WF-L1-27-24-MARINE GRADE FINISH, WITH DMLExx1242UD	HL-382S-TBD-MARINE GRADE FINISH	WR-ET2301-S10-MOD: 2700K-90-L-TBD-M-DMG, MARINE GRADE FINISH	DL-ES-15-O-27-HC-24 WITH 07UX1CBL1, DL-ALUM-C-6, MARINE GRADE FINISH, DMLEXX01242UD	750S-27K-VA-BG-CF WITH P70414-500-ECO
LAMP/CATALOG#	2700K WARM WHITE LED (INCLUDED WITH LUMINAIRE)	2700K WARM WHITE LED (INCLUDED WITH LUMINAIRE)	GREEN CREATIVE 6.5GU10DIM/927NF25	2700K LED (SUPPLIED WITH LUMINAIRE)	2700K WARM WHITE LED (INCLUDED WITH LUMINAIRE)	2700K WARM WHITE LED (INCLUDED WITH LUMINAIRE)
LUMINAIRE WATTAGE	3	3	7	6	1.5 PER FT.	1.5
DESCRIPTION	SURFACE MOUNTED LOW VOLTAGE ADJUSTABLE 2700K WARM WHITE LED ACCENT WITH 24 DEGREE OPTICS. MARINE GRADE FINISH PER ARCHITECT.	SURFACE MOUNTED LOW VOLTAGE ADJUSTABLE 2700K WARM WHITE LED ACCENT WITH 32 DEGREE OPTICS. MARINE GRADE FINISH PER ARCHITECT.	SURFACE MOUNTED LOW-PROFILE 2700K WARM WHITE LED ACCENT WITH GU-10 LAMP BASE, 25-DEGREE NARROW FLOOD OPTIC MR16 LAMP, AND MARINE GRADE FINISH PER ARCHITECT.	RECESS MOUNTED LOW VOLTAGE 2700K WARM WHITE LED STEP LIGHT WITH LOUVER FACEPLATE. MARINE GRADE FINISH PER ARCHITECT.	SURFACE MOUNTED LOW VOLTAGE OUTDOOR WARM WHITE LED TAPE LIGHT WITH MOUNTING CHANNEL, MARINE GRADE FINISH, AND FROSTED LENS COVER.	HANDRAIL RECESS MOUNTED LOW VOLTAGE LED PATH LIGHT WITH ASYMMETRIC BEAM, 1P67 RATED GLASS LENS, 316 STAINLESS STEEL MARINE GRADE FINISH.
NOTES	FIXTURE TO BE AIMED DOWNWARD. REQUIRES REMOTE POWER SUPPLY. CONTRACTOR TO COORDINATE MOUNTING ASSEMBLY AND PSU SIZE AND QUANTITY TO ENSURE AN EFFICIENT, COST EFFECTIVE INSTALLATION. REQUIRES 0-10V DIMMING.	FIXTURE TO BE AIMED DOWNWARD. REQUIRES REMOTE POWER SUPPLY. CONTRACTOR TO COORDINATE MOUNTING ASSEMBLY AND PSU SIZE AND QUANTITY TO ENSURE AN EFFICIENT, COST EFFECTIVE INSTALLATION. REQUIRES 0-10V DIMMING.	FIXTURE TO BE INSTALLED IN DOWNWARD ORIENTATION. REQUIRES PHASE DIMMING.	REQUIRES 0-10V DIMMING	REQUIRES REMOTE POWER SUPPLY HIDDEN FROM VIEW. CONTRACTOR TO ASSIST ON POWER SUPPLY SIZE AND QUANTITY TO ENSURE AN EFFICIENT, COST EFFECTIVE INSTALLATION. REQUIRES 0-10V DIMMING.	REQUIRES REMOTE POWER SUPPLY. CONTRACTOR TO COORDINATE MOUNTING ASSEMBLY AND PSU SIZE AND QUANTITY TO ENSURE AN EFFICIENT, COST EFFECTIVE INSTALLATION. REQUIRES 0-10V DIMMING.
VOLTS	120-277/24	120-277/24	120	120-277	120-277/24	120-277/24
CONTACT	JEFF WARUNEK PERFORMANCE LIGHTING PHONE: 949 246 9736 EMAIL: jeffw@performanceltg.com	JEFF WARUNEK PERFORMANCE LIGHTING PHONE: 949 246 9736 EMAIL: jeffw@performanceltg.com	JEFF WARUNEK PERFORMANCE LIGHTING PHONE: 949 246 9736 EMAIL: jeffw@performanceltg.com	JEFF WARUNEK PERFORMANCE LIGHTING PHONE: 949 246 9736 EMAIL: jeffw@performanceltg.com	JEFF WARUNEK PERFORMANCE LIGHTING TEL: 949 246 9736 EMAIL: jeffw@performanceltg.com	JEFF WARUNEK PERFORMANCE LIGHTING PHONE: 949 246 9736 EMAIL: jeffw@performanceltg.com
LAMP WATTAGE	3	3	7	10	1.5 PER FT.	1.5

B

LCP-12

ZONE	LOAD DESCRIPTION	VOLTAGE	CIRCUIT	DIM TYPE	CONTROL TYPE	ZONE	LOAD DESCRIPTION	VOLTAGE	CIRCUIT	DIM TYPE	CONTROL TYPE
Z01	ELEC/ELEV ROOM L1	120V	LP12-21	0-10V	OCC SENSOR	Z02	LEVEL 1 ELEVATOR (ELV01) XK122B	120V	LP12-21	FOR. ELV	PHOTO/TIME SCHEDULE
Z03	LEVEL 1 WOMENS RESTROOM (WRR01) B121D	120V	LP12-21	0-10V	OCC SENSOR	Z04	LEVEL 1 RESTROOM VESTIBULE (VST01) XB121C	120V	LP12-21	0-10V	PHOTO/TIME SCHEDULE
Z05	LEVEL 1 WOMENS RESTROOM (WRR02) B121C	120V	LP12-21	0-10V	OCC SENSOR	Z06	LEVEL 1 MAIN ENTRY (ENT01) XB121B	120V	LP12-21	0-10V	PHOTO/TIME SCHEDULE
Z07	LEVEL 1 MENS RESTROOM (MRR01) B121D	120V	LP12-21	0-10V	OCC SENSOR	Z08	LEVEL 1 CIRCULATION (CIR01) XK121C	120V	LP12-21	0-10V	PHOTO/TIME SCHEDULE
Z09	LEVEL 1 MENS RESTROOM (MRR02) B121C	120V	LP12-21	0-10V	OCC SENSOR	Z10	LEVEL 1 OUTDOOR DINING (FAC01) XK121B	120V	LP12-21	0-10V	PHOTO/TIME SCHEDULE
Z11	LEVEL 1 JANITOR ROOM/BOATER (OCS) B121D	120V	LP12-21	0-10V	OCC SENSOR	Z12	LEVEL 1 OUTDOOR DINING (FAC02) XK121B	120V	LP12-21	0-10V	PHOTO/TIME SCHEDULE
Z13	LEVEL 1 ELEVATOR VESTIBULE (VST02) XB121C	120V	LP12-21	0-10V	PHOTO/TIME SCHEDULE	Z14	LEVEL 1 OUTDOOR DINING (FAC03) XB121B	120V	LP12-21	0-10V	PHOTO/TIME SCHEDULE
Z15	LEVEL 1 OUTDOOR DINING (ODN03) XK121B	120V	LP12-21	0-10V	PHOTO/TIME SCHEDULE	Z16	LEVEL 1 OUTDOOR DINING (ODN01) XK12C	120V	LP12-21	0-10V	PHOTO/TIME SCHEDULE
Z17	LEVEL 1 OUTDOOR DINING (ODN02) XK121C	120V	LP12-21	0-10V	PHOTO/TIME SCHEDULE	Z18	LEVEL 2 CIRCULATION (CIR11) XS121	120V	LP12-21	0-10V	PHOTO/TIME SCHEDULE
Z19	LEVEL 1 OUTDOOR DINING (FAC04) XB121B	120V	LP12-21	0-10V	PHOTO/TIME SCHEDULE	Z20	LEVEL 2 CIRCULATION (CIR12) XS121	120V	LP12-21	0-10V	PHOTO/TIME SCHEDULE
Z21	LEVEL 2 CIRCULATION (CIR13) XS121	120V	LP12-21	0-10V	PHOTO/TIME SCHEDULE	Z22	LEVEL 2 MAIN ENTRY (ENT11) XB121B	120V	LP12-21	0-10V	PHOTO/TIME SCHEDULE
Z23	LEVEL 2 OUTDOOR DINING (ODN12) XB121B	120V	LP12-21	0-10V	PHOTO/TIME SCHEDULE	Z24	LEVEL 2 FAÇADE (FAC11) XZ121	120V	LP12-21	0-10V	PHOTO/TIME SCHEDULE
Z25	WEST STAIRWELL (STR02) XZ122	120V	INV-1	0-10V	PHOTO/TIME SCHEDULE	Z26	LEVEL 2 CIRCULATION (CIR21) XK121C	120V	LP12-21	0-10V	PHOTO/TIME SCHEDULE
Z27	LEVEL 1 EXIT (EXT03) XB121C	120V	INV-1	0-10V	PHOTO/TIME SCHEDULE	Z28	LEVEL 2 OUTDOOR DINING (ODN11) XB121B	120V	LP12-21	0-10V	PHOTO/TIME SCHEDULE
Z29	LEVEL 1 ELEVATOR VESTIBULE (VST02) XB121C	120V	INV-1	0-10V	PHOTO/TIME SCHEDULE	Z30	NORTH STAIRWELL (STR01) XZ122	120V	INV-1	0-10V	PHOTO/TIME SCHEDULE
Z31	LEVEL 1 EXIT (EXT01) XK121C	120V	INV-1	0-10V	PHOTO/TIME SCHEDULE	Z32	LEVEL 1 RESTROOM VESTIBULE (VST01) XB121C	120V	INV-1	0-10V	PHOTO/TIME SCHEDULE
Z33	LEVEL 1 MAIN DINING ENTRY (ENT02) XB121C	120V	INV-1	0-10V	PHOTO/TIME SCHEDULE	Z34	LEVEL 1 MAIN ENTRY (ENT01) XB121B	120V	INV-1	0-10V	PHOTO/TIME SCHEDULE
Z35	LEVEL 2 OUTDOOR DINING (ODN12) XB121B	120V	INV-1	0-10V	PHOTO/TIME SCHEDULE	Z36	LEVEL 2 MAIN ENTRY (ENT11) XB121B	120V	INV-1	0-10V	PHOTO/TIME SCHEDULE
Z37	SPARE					Z38	SPARE				
Z39	SPARE					Z40	SPARE				
Z41	SPARE					Z42	SPARE				
Z43	SPARE					Z44	SPARE				
Z45	SPARE					Z46	SPARE				
Z47	SPARE					Z48	SPARE				
Z49	SPARE					Z50	SPARE				

THREE PHASE PANELBOARD SCHEDULE

POLE NO.	C.B. AMP/P	LOAD DESCRIPTION	WATTS	LOAD TYPE	C.B. OPT.	ΦA	ΦB	ΦC	C.B. OPT.	LOAD TYPE	WATTS	LOAD DESCRIPTION	C.B. AMP/P	POLE NO.
1	20/1	SPARE										SPARE	20/1	2
3	20/1	SITE LIGHTING										SPARE	20/1	4
5	20/1	SITE LIGHTING										SPARE	20/1	6
7	20/1	SPARE										SPARE	20/1	8
9	20/1	SPARE										SPARE	20/1	10
11	20/1	SPARE										SPARE	20/1	12
13		SPACE FOR FUTURE CTS										SPACE FOR FUTURE CTS		14
15		SPACE FOR FUTURE CTS										SPACE FOR FUTURE CTS		16
17		SPACE FOR FUTURE CTS										SPACE FOR FUTURE CTS		18
19		SPACE				2,000				M	2,000	WH-1	20/3	20
21		SPACE					2,000			M	2,000			22
23		SPACE						2,000		M	2,000			24
25	70/3	ELEVATOR MOTOR	9,695	M		9,695						SPACE		26
27			9,695	M			9,695					SPACE		28
29			9,695	M				9,695				SPACE		30
31	20/1	SPARE										SPACE		32
33	20/1	SPARE										SPACE		34
35	20/1	SPARE										SPACE		36
37	70/3	TRANSFORMER "T-12" SUB-FEED	2,108	M		2,108						SPACE		38
39			2,108	M			2,108					SPACE		40
41			4,396	M				4,396				SPACE		42

ABBREVIATIONS	
Φ	PHASE
A.I.C.	AMPERE INTERRUPTING CURRENT(KAIC=1000 AIC)
C.B.	CIRCUIT BREAKER
OPT.	CIRCUIT BREAKER OPTIONS OR SPECIAL FEATURES (WHERE NONE SHOWN PROVIDE THERMAL/MAG. C.B.)
IG	ISOLATED GROUND
GFCI	GROUND FAULT CIRCUIT INTERRUPTER
P	NUMBER OF POLES
TVSS	TRANSIENT VOLTAGE SURGE SUPPRESSION
LO	"LOCK-ON" DEVICE

CONN. LOAD PER Φ IN KW:	13.80	13.80	16.09
LOAD SUMMARY	CONN. KW	DEMAND FACTOR	DEMAND KW
LTG. & CONTIN. LOADS [L]		125%	
RECEPT.S ≤ 10KVA [R]		100%	
RECEPT.S > 10KVA [R]		50%	
MISC. LOADS [M]	43.7	100%	43.7
AIR COND/HTG LOADS [A]		100%	
COMM. KITCHEN LOADS [K]		65%	
TOTALS:	43.7		43.7
DEMAND KW PER Φ:	13.8	13.8	16.1

PANELBOARD RATINGS	
VOLTS:	277/480
PHASES/WIRES:	3PH/4W
MAIN C.B.:	MLO
BUS AMPERES:	225A
TVSS REQ'D:	NO
ENCLOSURE:	NEMA 1, SURFACE
AIC RATING:	65KAIC
HI Φ AMPS	58.1
DEMAND AMPS	52.6

PANEL TAG: **HP12** (N)

THREE PHASE PANELBOARD SCHEDULE

POLE NO.	C.B. AMP/P	LOAD DESCRIPTION	WATTS	LOAD TYPE	C.B. OPT.	ΦA	ΦB	ΦC	C.B. OPT.	LOAD TYPE	WATTS	LOAD DESCRIPTION	C.B. AMP/P	POLE NO.
1	20/1	RESTROOM GFCI RECEPTS	720	R		1,220			LO	M	500	FACP	20/1	2
3	20/1	TELE BACKBOARD RECEPT	500	R			750			M	250	ELEV. MACHINE ROOM LIGHT AND RECEPT	20/1	4
5	20/1	AV RACK RECEPTACLE	1,500	R				2,000		M	500	ELEV. CAB LTS	20/1	6
7	20/1	ELEC ROOM RECEPT	360	R		740				M	380	ELEVATOR PUT RECEPT AND LIGHTS	20/1	8
9	20/1	ROOFTOP RECEPTACLES	360	R			860			M	500	ELEVATOR CONTROL CABINET	20/1	10
11	20/1	TIME CLOCK CONTROL	200	M				200				SPARE	20/1	12
13		SPACE FOR FUTURE CTS										SPACE FOR FUTURE CTS		14
15		SPACE FOR FUTURE CTS										SPACE FOR FUTURE CTS		16
17		SPACE FOR FUTURE CTS										SPACE FOR FUTURE CTS		18
19	20/1	TRAP PRIMER	28	M		28						SPARE	20/1	20
21	20/1	LIGHTING	1,020	L			1,020					SPARE	20/1	22
23	20/1	SPARE										SPARE	20/1	24
25	20/1	SPARE										SPARE	20/1	26
27	20/1	SPARE										SPARE	20/1	28
29	20/1	SPARE										SPARE	20/1	30
31		SPACE FOR FUTURE CTS										SPACE FOR FUTURE CTS		32
33		SPACE FOR FUTURE CTS										SPACE FOR FUTURE CTS		34
35		SPACE FOR FUTURE CTS										SPACE FOR FUTURE CTS		36
37	20/1	EF-EV	209	A		209						SPACE		38
39	20/1	EF-EL	127	A			127					SPACE		40
41	20/1	EF-RR.1	187	A				187				SPACE		42
43		SPACE										SPACE		44
45		SPACE										SPACE		46
47		SPACE										SPACE		48
49		SPACE										SPACE		50
51		SPACE										SPACE		52
53		SPACE										SPACE		54
55		SPACE										SPACE		56
57		SPACE										SPACE		58
59		SPACE										SPACE		60
61		LIGHTING INVERTER	124	L		124						SPACE		62
63		SPACE										SPACE		64
65		SPACE										SPACE		66

B

ABBREVIATIONS	
Φ	PHASE
A.I.C.	AMPERE INTERRUPTING CURRENT(KAIC=1000 AIC)
C.B.	CIRCUIT BREAKER
OPT.	CIRCUIT BREAKER OPTIONS OR SPECIAL FEATURES (WHERE NONE SHOWN PROVIDE THERMAL/MAG. C.B.)
IG	ISOLATED GROUND
GFCI	GROUND FAULT CIRCUIT INTERRUPTER
P	NUMBER OF POLES
TVSS	TRANSIENT VOLTAGE SURGE SUPPRESSION
LO	"LOCK-ON" DEVICE

CONN. LOAD PER Φ IN KW:	2.32	2.76	2.39
LOAD SUMMARY	CONN. KW	DEMAND FACTOR	DEMAND KW
LTG. & CONTIN. LOADS [L]	1.14	125%	1.43
RECEPT.S ≤ 10KVA [R]	3.44	100%	3.44
RECEPT.S > 10KVA [R]		50%	
MISC. LOADS [M]	2.4	100%	2.4
AIR COND/HTG LOADS [A]	0.5	100%	0.5
COMM. KITCHEN LOADS [K]		65%	
TOTALS:	7.5		7.8
DEMAND KW PER Φ:	2.4	3.0	2.4

PANELBOARD RATINGS	
VOLTS:	120/208
PHASES/WIRES:	3PH/4W
MAIN C.B.:	125A
BUS AMPERES:	200A
TVSS REQ'D:	NO
ENCLOSURE:	NEMA 1, SURFACE
AIC RATING:	10KAIC
HI Φ AMPS	23.0
DEMAND AMPS	21.5

PANEL TAG: **LP12** (N)

THREE PHASE PANELBOARD SCHEDULE

POLE NO.	C.B. AMP/P	LOAD DESCRIPTION	WATTS	LOAD TYPE	C.B. OPT.	ΦA	ΦB	ΦC	C.B. OPT.	LOAD TYPE	WATTS	LOAD DESCRIPTION	C.B. AMP/P	POLE NO.
1	40/2	LEVEL 2 EV CHARGING STATION #1A	3,600	M		3,600						SPACE		2
3			3,600	M			3,600					SPACE		4
5	40/2	LEVEL 2 EV CHARGING STATION #1B	3,600	M				3,600				SPACE		6
7			3,600	M		3,600						SPACE		8
9	40/2	LEVEL 2 EV CHARGING STATION #2A	3,600	M			3,600					SPACE		10
11			3,600	M				3,600				SPACE		12
13	40/2	LEVEL 2 EV CHARGING STATION #2B	3,600	M		3,600						SPACE		14
15			3,600	M			3,600					SPACE		16
17	40/2	LEVEL 2 EV CHARGING STATION #3A	3,600	M				3,600				SPACE		18
19			3,600	M		3,600						SPACE		20
21	40/2	LEVEL 2 EV CHARGING STATION #3B	3,600	M			3,600					SPACE		22
23			3,600	M				3,600				SPACE		24
25		SPACE										SPACE		26
27		SPACE										SPACE		28
29		SPACE										SPACE		30
31		SPACE										SPACE		32
33		SPACE										SPACE		34
35		SPACE										SPACE		36
37		SPACE										SPACE		38
39		SPACE										SPACE		40
41		SPACE										SPACE		42

ABBREVIATIONS	
Φ	PHASE
A.I.C.	AMPERE INTERRUPTING CURRENT(KAIC=1000 AIC)
C.B.	CIRCUIT BREAKER
OPT.	CIRCUIT BREAKER OPTIONS OR SPECIAL FEATURES (WHERE NONE SHOWN PROVIDE THERMAL/MAG. C.B.)
IG	ISOLATED GROUND
GFCI	GROUND FAULT CIRCUIT INTERRUPTER
P	NUMBER OF POLES
TVSS	TRANSIENT VOLTAGE SURGE SUPPRESSION
LO	"LOCK-ON" DEVICE

CONN. LOAD PER Φ IN KW:	14.40	14.40	14.40
LOAD SUMMARY	CONN. KW	DEMAND FACTOR	DEMAND KW
LTG. & CONTIN. LOADS [L]		125%	
RECEPT.S ≤ 10KVA [R]		100%	
RECEPT.S > 10KVA [R]		50%	
MISC. LOADS [M]	43.2	100%	43.2
AIR COND/HTG LOADS [A]		100%	
COMM. KITCHEN LOADS [K]		65%	
TOTALS:	43.2		43.2
DEMAND KW PER Φ:	14.4	14.4	14.4

PANELBOARD RATINGS	
VOLTS:	120/208
PHASES/WIRES:	3PH/4W
MAIN C.B.:	200A
BUS AMPERES:	225A
TVSS REQ'D:	NO
ENCLOSURE:	NEMA 1, SURFACE
AIC RATING:	10KAIC
HI Φ AMPS	119.9
DEMAND AMPS	119.9

PANEL TAG: **LEV12** (N)

Zoning: CanningK 11/13/2024

Building&Safety: OCPWAzarvandB 12/22/2025

Permits: BNR21-0246, ELE21-0853, MEC21-0514, PLB21-0900

County of Orange - OC Public Works
OC Development Services
APPROVED

This set of plans and specifications must be kept on the job at all times. It is unlawful to make any changes or alterations to these plans without written permission from OC Public Works, OC Development Services of Orange County. The stamping of these plan specifications SHALL NOT be held to permit or be an approval of the violation of any provisions of any County Ordinance or State law.

Hadi Tabatabaee
BUILDING OFFICIAL

GENERAL NOTES

1. AT THE CONCLUSION OF THIS PROJECT, THE ELECTRICAL CONTRACTOR SHALL PROVIDE AN UPDATED TYPEWRITTEN DIRECTORY INSIDE EACH PANELBOARD PROPERLY IDENTIFYING EACH CIRCUIT USED AND THE SPECIFIC LOAD SERVED.
2. IT IS THE ELECTRICAL CONTRACTOR'S RESPONSIBILITY TO PROPERLY BALANCE ALL BRANCH CIRCUITS BETWEEN THE PHASES OF THE SYSTEM, REGARDLESS OF CIRCUITING INDICATED.

CITY OF DANA POINT
PLANNING DIVISION
This plan has been reviewed for ZONING ONLY and meets the requirements of Title 9 of the Dana Point Municipal Code.

APPROVED KBN

DATE 10/21/24

COMMENTS BUILDING 12 (OC PERMIT PKG21-0516) PER CDP13-0018(I).

PLAN NOTES "X"

SMSARCHITECTS
100 Progress #250
Irvine, California 92618
949.757.3240 | www.sms-arch.com

CONSTANT
LINWOOD ENGINEERING INC
2301 dupont drive, suite 150
irvine, ca 92612 • 714.424.0001
www.linwoodengineering.com

DANA POINT HARBOR PARTNERS

PROJECT NAME:
DANA POINT HARBOR COMMERCIAL CORE
BUILDING 12
1290 HARBOR WAY
DANA POINT, CA 92629

CLIENT
B|W|P BURNHAM|WARD PROPERTIES

Robert J. Hatch, P.E.
CA # E16118
REGISTERED PROFESSIONAL ENGINEER ROBERT J. HATCH E16118 ELECTRICAL STATE OF CALIFORNIA
EXP. 12/31/25

No.	DATE	ISSUE
	06/01/2021	COUNTY SUBMITTAL
	09/24/2021	COUNTY RESUBMITTAL
	12/06/2022	50% DESIGN DEVELOPMENT
	02/10/2023	100% DESIGN DEVELOPMENT
	03/03/2023	50% CD PROGRESS SET
	04/21/2023	COUNTY RESUBMITTAL
A	07/24/2023	CITY RESUBMITTAL
B	10/11/2024	LIGHTING UPDATES

DRAWINGS AND WRITTEN MATERIAL APPEARING HEREIN CONSTITUTE ORIGINAL AND UNPUBLISHED WORK OF SMS ARCHITECTS AND MAY NOT BE DUPLICATED, USED OR DISCLOSED WITHOUT WRITTEN CONSENT OF THE ARCHITECT

PROJECT NO. 19019-12

DATE FEBRUARY 10, 2023

DRAWING TITLE
ELECTRICAL SCHEDULES

DRAWING NO.
E5.1.1

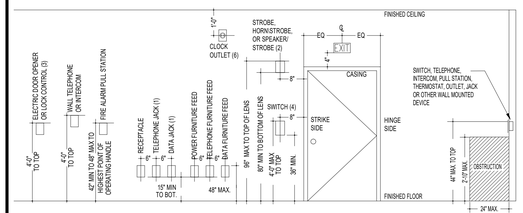

TYPICAL DEVICE LOCATION & ELEVATIONS | 04

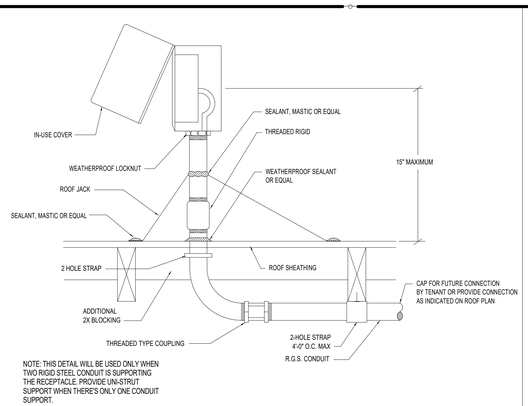

NOTE: THIS DETAIL WILL BE USED ONLY WHEN TWO RIGID STEEL CONDUIT IS SUPPORTING THE RECEPTACLE. PROVIDE UNI-STRUT SUPPORT WHEN THERE'S ONLY ONE CONDUIT SUPPORT.

ROOFTOP RECEPTACLE MOUNTING DETAIL | 03

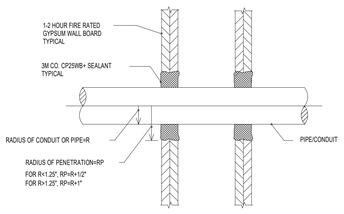

CONDUIT/PIPE PENETRATION THRU RATED WALL

PROVIDE 3M CP 25WB+ CAULK FOR CONDUIT OR PIPE PENETRATIONS OF UP TO 12" THROUGH 1-HOUR AND 2-HOUR RATED WALLS.

- METAL PIPE/CONDUIT APPLICATIONS THROUGH NOMINAL 12 IN. (304.8MM) OUTSIDE DIAMETER. INSTALLED DEPTH OF CP 25WB+ CAULK DEPENDS ON ANNULAR SPACE.
- WHEN THE ANNULAR SPACE IS LESS AND 1-1/4 IN. (31.8 MM), A 1/2 IN. (12.7MM) MINIMUM DEPTH OF CP 25WB+ CAULK IS REQUIRED.
- WHEN THE ANNULAR SPACE IS GREATER THAN 1-1/4 IN. (31.8 MM), A 1 IN. (25.4MM) MINIMUM DEPTH OF CP25WB+ CAULK IS REQUIRED.
- COMMON BUILDING MATERIALS SUCH AS BACKER ROD MAY BE USED FOR METAL PIPE APPLICATIONS.

CONDUIT PENETRATION THRU RATED WALL | 02

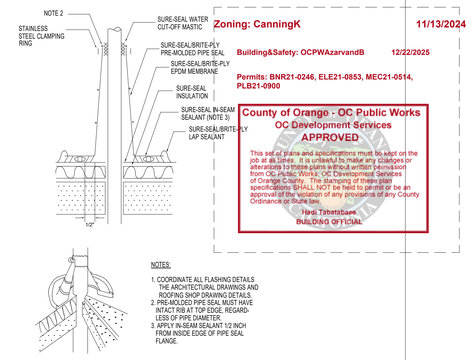

NOTES:

1. COORDINATE ALL FLASHING DETAILS THE ARCHITECTURAL DRAWINGS AND ROOFING SHOP DRAWING DETAILS.
2. PRE-MOLDED PIPE SEAL MUST HAVE INTACT RIB AT TOP EDGE. REGARD-LESS OF PIPE DIAMETER.
3. APPLY IN-SEAM SEALANT 1/2 INCH FROM INSIDE EDGE OF PIPE SEAL FLANGE.

FLASHING DETAIL FOR PIPES THRU ROOF | 01

CITY OF DANA POINT
PLANNING DIVISION

This plan has been reviewed for ZONING ONLY and meets the requirements of Title 9 of the Dana Point Municipal Code.

APPROVED KBN

DATE 10/21/24

COMMENTS BUILDING 12 (OC PERMIT PKG21-0516) PER CDP13-0018(I).

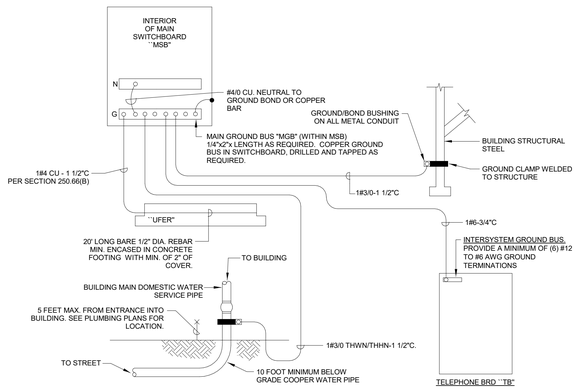

** MAIN BONDING JUMPER SHALL BE SIZED AS FOLLOWS:		* GROUNDING ELECTRODE CONDUCTOR SHALL BE SIZED AS FOLLOWS:	
SERVICE SIZE	M.B.J. SIZE (NEC 250-66)	SERVICE SIZE	M.B.J. SIZE
0-1,000A	#3/0	0-200A	#4
1,200A	#4/0	201-400A	#1/0
1,600A	#250MCM	OVER 401A	#3/0
2,000A	#300MCM		
2,500A	#500MCM		
3,000A	#500MCM		
4,000A	#600MCM		

NOTE:
ALL EXPOSED GROUNDING PATHS SHALL BE CONDUCTORS IN CONDUIT. PROVIDE CONDUIT GROUND BUSHINGS.

SYSTEM GROUNDING DETAIL | 07

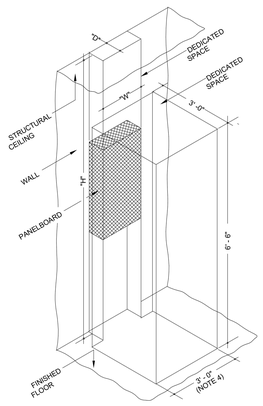

NOTES:

1. DIMENSIONS "D" AND "W" ARE ELECTRICAL PANEL DEPTH AND WIDTH, RESPECTIVELY. COORDINATE THESE DIMENSIONS WITH THE ELECTRICAL EQUIPMENT SHOP DRAWINGS.
2. DIMENSION "H" SHALL BE THE DISTANCE FROM FINISHED FLOOR TO STRUCTURAL CEILING, OR 25'-0", WHICHEVER IS LESS.
3. NO PIPING, DUCTS, ARCHITECTURAL APPURTENANCES OR OTHER ELECTRICAL EQUIPMENT SHALL BE PERMITTED TO BE INSTALLED WITHIN THE "DEDICATED SPACE".
4. THE THREE FOOT WIDE SECTION OF THE DEDICATED SPACE SHALL BE PERMITTED TO OVERLAP WITH THE "DEDICATED SPACE" REQUIREMENT FOR ADJACENT PANELBOARDS.
5. SUSPENDED ACOUSTICAL CEILINGS SHALL NOT BE CONSIDERED TO BE STRUCTURAL.

DEDICATED SPACE AROUND ELEC. PANELS | 06

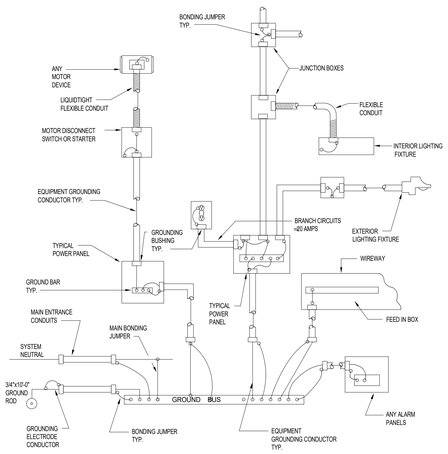

EQUIPMENT GROUNDING AND BONDING | 05

SMSARCHITECTS
100 Progress #250
Irvine, California 92618
949.757.3240 | www.sms-arch.com

CONSTANT
LINWOOD ENGINEERING INC
2301 dupont drive, suite 150
irvine, ca 92612 • 714.424.0003
www.linwoodengineering.com

DANA POINT HARBOR PARTNERS

PROJECT NAME
DANA POINT HARBOR COMMERCIAL CORE
BUILDING 12
1290 HARBOR WAY
DANA POINT, CA 92629

CLIENT
BWP PROPERTIES
BURNHAM|WARD

Robert J. Hatch, P.E.
CA # E16118

EXP. 12/31/25

No.	DATE	ISSUE
	06/01/2021	COUNTY SUBMITTAL
	09/24/2021	COUNTY RESUBMITTAL
	12/06/2022	50% DESIGN DEVELOPMENT
	02/10/2023	100% DESIGN DEVELOPMENT
	03/03/2023	50% CD PROGRESS SET
	04/21/2023	COUNTY RESUBMITTAL
A	07/24/2023	CITY RESUBMITTAL

DRAWINGS AND WRITTEN MATERIAL APPEARING HEREIN CONSTITUTE ORIGINAL AND UNPUBLISHED WORK OF SMS ARCHITECTS AND MAY NOT BE DUPLICATED, USED OR DISCLOSED WITHOUT WRITTEN CONSENT OF THE ARCHITECT

PROJECT NO 19019-12

DATE FEBRUARY 10, 2023

DRAWING TITLE
ELECTRICAL DETAILS

DRAWING NO.
E6.1.1

BIM 360://19274 Dana Point Harbor Revitalization_R21/19274 MEP Dana Point - Bldg 12 R21.rvt

10/11/2024 9:26:09 AM

CERTIFICATE OF COMPLIANCE			**NRCC-LTI-E**
Project Name:	Dana Point - Bldg 12	**Report Page:**	**(Page 3 of 6)**
Project Address:	1290 Harbor Way	**Date Prepared:**	10/7/2024

H. INDOOR LIGHTING CONTROLS (Not including PAFs)

*This table includes lighting controls for conditioned and unconditioned spaces. When a control having a * is shown, the notes section of this table provides more detail on how compliance is achieved. The lighting controls section of the Compliance Summary Table on the first page will show "DOES NOT COMPLY" if the notes are left blank.*

Building Level Controls

01	02	03	
Mandatory Demand Response §110.12(c)	Shut-off controls §130.1(c)	Field Inspector	
		Pass	Fail
Not Required <= 10,000 SF	Whole Building Auto Time Switch	☐	☐

Area Level Controls

04	05	06	07	08	09	10	11	12	
Area Description	Complete Building or Area Category Primary Function Area	Area Controls §130.1(a)	Multi-Level Controls §130.1(b)	Shut-Off Controls §130.1(c)	Primary/Skylit Daylighting §130.1(d)	Secondary Daylighting §140.6(d)	Interlocked Systems §140.6(a)1	Field Inspector	
								Pass	Fail
Electrical	Electrical Mechancial Telephone Room	Manual ON/OFF	Dimmer	Exempt*	N/A	N/A	No	☐	☐
Restroom	Restrooms	Manual ON/OFF	Dimmer	Vacancy	N/A	N/A	No	☐	☐
Shower	Restrooms	Manual ON/OFF	Dimmer	Vacancy	N/A	N/A	No	☐	☐
Unleased	All Other Space Types	Manual ON/OFF	Dimmer	Occupancy Sensor	N/A	N/A	No	☐	☐

*NOTES: Controls with a * require a note in the space below explaining how compliance is achieved. *EX: Conference 1: Primary/Skylight Daylighting: Exempt because less than 120 watts of general lighting; EXCEPTION 1 to §130.1(d)2*	13 Plan Sheet Showing Daylit Zones:
Electrical	

CERTIFICATE OF COMPLIANCE			**NRCC-LTI-E**
Project Name:	Dana Point - Bldg 12	**Report Page:**	**(Page 2 of 6)**
Project Address:	1290 Harbor Way	**Date Prepared:**	10/7/2024

C. COMPLIANCE RESULTS

Controls Compliance (See Table H for Details)	COMPLIES
Rated Power Reduction Compliance (See Table Q for Details)	

D. EXCEPTIONAL CONDITIONS

This table is auto-filled with uneditable comments because of selections made or data entered in tables throughout the form.

E. ADDITIONAL REMARKS

This table includes remarks made by the permit applicant to the Authority Having Jurisdiction.

F. INDOOR LIGHTING FIXTURE SCHEDULE

This table includes all permanent designed lighting and all portable lighting in offices.

Designed Wattage: Conditioned Spaces

01	02	03	04	05	06	07	08	09	10	
Name or Item Tag	Complete Luminaire Description	Modular (Track) Fixture	Small Aperture & Color Change[1]	Watts per luminaire[2]	How is Wattage determined	Total Number of Luminaires	Excluded per §140.6(a)3	Design Watts	Field Inspector	
									Pass	Fail
B121C	B121C	No	No	16	Mfr. Spec	4	No	64	☐	☐
B121D	B121D	No	No	16	Mfr. Spec	10	No	160	☐	☐
L1	L1 - 27.5W LED Striplight	No	No	27.5	Mfr. Spec	7	No	192.5	☐	☐
Total Designed Watts: CONDITIONED SPACES								416		

[1]*FOOTNOTE: Design Watts for small aperture and color changing luminaires which qualify per §140.6(a)4B is adjusted to be 75% of their rated wattage. Table F automatically makes this adjustment, the permit applicant should enter full rated wattage in column 05.*

[2]*Authority Having Jurisdiction may ask for Luminaire cut sheets to confirm wattage used for compliance per §130.0(c) Wattage used must be the maximum rated for the luminaire, not the lamp.*

G. MODULAR LIGHTING SYSTEMS

This section does not apply to this project.

Zoning: CanningK 11/13/2024
Building&Safety: OCPWAzarvandB 12/22/2025
Permits: BNR21-0246, ELE21-0853, MEC21-0514, PLB21-0900

CERTIFICATE OF COMPLIANCE			**NRCC-LTI-E**
This document is used to demonstrate compliance with requirements in §110.9, §110.12(c), §130.0, §130.1, §140.6 and §141.0(b)2 for indoor lighting scopes using the prescriptive path.			
Project Name:	Dana Point - Bldg 12	**Report Page:**	**(Page 1 of 6)**
Project Address:	1290 Harbor Way	**Date Prepared:**	10/7/2024

A. GENERAL INFORMATION

01	Project Location (city)	Dana Point	04	Total Conditioned Floor Area (ft²)	829
02	Climate Zone	6	05	Total Unconditioned Floor Area (ft²)	0
03	Occupancy Types Within Project (select all that apply):		06	# of Stories (Habitable Above Grade)	1

● Support Areas ● : See Table I

County of Orange - OC Public Works
OC Development Services
APPROVED
This set of plans and specifications must be kept on the job at all times. It is unlawful to make any changes or alterations to these plans without written permission from OC Public Works, OC Development Services of Orange County. The stamping of these plan specifications SHALL NOT be held to permit or be an approval of the violation of any provisions of any County Ordinance or State law.
Hadi Tabatabaee
BUILDING OFFICIAL

B. PROJECT SCOPE

This table includes any lighting systems that are within the scope of the permit application and are demonstrating compliance using the prescriptive path outlined in §140.6 or §141.0(b)2 for alterations.

Scope of Work	Conditioned Spaces		Unconditioned Spaces	
01	02	03	04	05
My Project Consists of (check all that apply):	Calculation Method	Area (ft²)	Calculation Method	Area (ft²)
☒ New Lighting System	Area Category Method	829	Area Category Method	0
☐ New Lighting System - Parking Garage				
Total Area of Work (ft²)	829		0	

C. COMPLIANCE RESULTS

If any cell on this table says "DOES NOT COMPLY" or "COMPLIES with Exceptional Conditions" refer to Table D. for guidance.

	Allowed Lighting Power per §140.6(b) (Watts)							Adjusted Lighting Power per §140.6(a) (Watts)				Compliance Results
Lighting in conditioned and unconditioned spaces must not be combined for compliance per §140.6(b)1	01	02	03	04		05		06	07		08	09
	Complete Building §140.6(c)1	Area Category §140.6(c)2	Area Category Additional §140.6(c)2G (+)	Tailored §140.6(c)3 (+)	=	**Total Allowed** (Watts)	≥	Total Designed (Watts)	Adjustments: PAF Lighting Control Credits §140.6(a)2 (-)	=	**Total Adjusted** (Watts) *Includes Adjustments	**05 must be >= 08** §140.6
	(See Table I)	(See Table I)	(See Table J)	(See Table K)				(See Table F)	(See Table P)			
Conditioned		421.6	0		=	422	≥	416	0	=	416	COMPLIES
Unconditioned					=		≥			=		

CERTIFICATE OF COMPLIANCE			**NRCC-LTI-E**
Project Name:	Dana Point - Bldg 12	**Report Page:**	**(Page 6 of 6)**
Project Address:	1290 Harbor Way	**Date Prepared:**	10/7/2024

DOCUMENTATION AUTHOR'S DECLARATION STATEMENT

I certify that this Certificate of Compliance documentation is accurate and complete.

Documentation Author Name: Rinah Park	Documentation Author Signature: [signature]
Company: Linwood Engineering, Inc.	Signature Date: 2024-10-07
Address: 2301 Dupont Dr. STE 150	CEA/ HERS Certification Identification (if applicable): N/A
City/State/Zip: Irvine CA 92612	Phone: 714.424.0001

RESPONSIBLE PERSON'S DECLARATION STATEMENT

I certify the following under penalty of perjury, under the laws of the State of California:

1. The information provided on this Certificate of Compliance is true and correct.
2. I am eligible under Division 3 of the Business and Professions Code to accept responsibility for the building design or system design identified on this Certificate of Compliance (responsible designer)
3. The energy features and performance specifications, materials, components, and manufactured devices for the building design or system design identified on this Certificate of Compliance conform to the requirements of Title 24, Part 1 and Part 6 of the California Code of Regulations.
4. The building design features or system design features identified on this Certificate of Compliance are consistent with the information provided on other applicable compliance documents, worksheets, calculations, plans and specifications submitted to the enforcement agency for approval with this building permit application.
5. I will ensure that a completed signed copy of this Certificate of Compliance shall be made available with the building permit(s) issued for the building, and made available to the enforcement agency for all applicable inspections. I understand that a completed signed copy of this Certificate of Compliance is required to be included with the documentation the builder provides to the building owner at occupancy.

Responsible Designer Name: Robert J. Hatch	Responsible Designer Signature: [signature]
Company: Linwood Engineering, Inc.	Date Signed: 2024-10-07
Address: 2301 Dupont Dr. Suite 150	License: E16118
City/State/Zip: Irvine CA 92612	Phone: 714-424-0001

CITY OF DANA POINT
PLANNING DIVISION
This plan has been reviewed for ZONING ONLY and meets the requirements of Title 9 of the Dana Point Municipal Code.
APPROVED KBN
DATE 10/21/24
COMMENTS BUILDING 12 (OC PERMIT PKG21-0516) PER CDP13-0018(I).

CERTIFICATE OF COMPLIANCE			**NRCC-LTI-E**
Project Name:	Dana Point - Bldg 12	**Report Page:**	**(Page 5 of 6)**
Project Address:	1290 Harbor Way	**Date Prepared:**	10/7/2024

P. POWER ADJUSTMENT: LIGHTING CONTROL CREDIT (POWER ADJUSTMENT FACTOR (PAF))

This section does not apply to this project.

Q. RATED POWER REDUCTION COMPLIANCE FOR ALTERATIONS

This section does not apply to this project.

R. 80% LIGHTING POWER FOR ALL ALTERATIONS - CONTROLS EXCEPTIONS

This section does not apply to this project.

S. DAYLIGHT DESIGN POWER ADJUSTMENT FACTOR (PAF)

This section does not apply to this project.

T. DECLARATION OF REQUIRED CERTIFICATES OF INSTALLATION

Selections have been made based on information provided in this document. If any selection have been changed by permit applicant, an explanation should be included in Table E. Additional Remarks. These documents must be provided to the building inspector during construction and can be found online at https://www.energy.ca.gov/title24/2019standards/2019_compliance_documents/Nonresidential_Documents/NRCI/

Form/Title	Field Inspector	
	Pass	Fail
NRCI-LTI-01-E - Must be submitted for all buildings	☐	☐

U. DECLARATION OF REQUIRED CERTIFICATES OF ACCEPTANCE

Selections have been made based on information provided in this document. If any selection have been changed by the permit applicant, an explanation should be included in Table E. Additional Remarks. These documents must be provided to the building inspector during construction and any with "-A" in the form name must be completed through an Acceptance Test Technician Certification Provider (ATTCP). For more information visit: http://www.energy.ca.gov/title24/attcp/providers.html

Form/Title	Systems/Spaces To Be Field Verified	Field Inspector	
		Pass	Fail
NRCA-LTI-02-A - Must be submitted for occupancy sensors and automatic time switch controls.		☐	☐

CERTIFICATE OF COMPLIANCE			**NRCC-LTI-E**
Project Name:	Dana Point - Bldg 12	**Report Page:**	**(Page 4 of 6)**
Project Address:	1290 Harbor Way	**Date Prepared:**	10/7/2024

I. LIGHTING POWER ALLOWANCE: COMPLETE BUILDING OR AREA CATEGORY METHODS

Each area complying using the Complete Building or Area Category Methods per §140.6(b) are included in this table. Column 06 indicates if additional lighting power allowances per §140.6(c) or adjustments per §140.6(a) are being used .

Conditioned Spaces

01	02	03	04	05	06	
Area Description	Complete Building or Area Category Primary Function Area	Allowed Density (W/ft²)	Area (ft²)	Allowed Wattage (Watts)	Additional Allowance / Adjustment	
					Area Category	PAF
Electrical, Mechanical Rooms	Electrical Mechancial Telephone Room	0.4	369	147.6	No	No
Restrooms	Restrooms	0.65	315	204.8	No	No
Boated Service Shower	Restrooms	0.65	45	29.2	No	No
Unleased Tenant	All Other Space Types	0.4	100	40	No	No
		TOTALS:	829	421.6	See Tables J, or P for detail	

J. ADDITIONAL ALLOWANCE: AREA CATEGORY METHOD QUALIFYING LIGHTING SYSTEM

This section does not apply to this project.

K. TAILORED METHOD GENERAL LIGHTING POWER ALLOWANCE

This section does not apply to this project.

L. ADDITIONAL LIGHTING ALLOWANCE: TAILORED WALL DISPLAY

This section does not apply to this project.

M. ADDITIONAL LIGHTING ALLOWANCE: TAILORED FLOOR AND TASK LIGHTING

This section does not apply to this project.

N. ADDITIONAL LIGHTING ALLOWANCE: TAILORED ORNAMENTAL/SPECIAL EFFECTS

This section does not apply to this project.

O. ADDITIONAL LIGHTING ALLOWANCE: TAILORED VERY VALUABLE MERCHANDISE

This section does not apply to this project.

SMSARCHITECTS
100 Progress #250
Irvine, California 92618
949.757.3240 | www.sms-arch.com

CONSTANT
LINWOOD ENGINEERING INC
2301 dupont drive, suite 150
irvine, ca 92612 • 714.424.0001
www.linwoodengineering.com

DANA POINT HARBOR PARTNERS

PROJECT NAME:
DANA POINT HARBOR COMMERCIAL CORE
BUILDING 12
1290 HARBOR WAY
DANA POINT, CA 92629

CLIENT:
B|W|P BURNHAM|WARD PROPERTIES

Robert J. Hatch, P.E.
CA # E16118
REGISTERED PROFESSIONAL ENGINEER ROBERT J. HATCH E16118 ELECTRICAL STATE OF CALIFORNIA
EXP. 12/31/25

No.	DATE	ISSUE
	06/01/2021	COUNTY SUBMITTAL
	09/24/2021	COUNTY RESUBMITTAL
	12/06/2022	50% DESIGN DEVELOPMENT
	02/10/2023	100% DESIGN DEVELOPMENT
	03/03/2023	50% CD PROGRESS SET
	04/21/2023	COUNTY RESUBMITTAL
A	07/24/2023	CITY RESUBMITTAL

DRAWINGS AND WRITTEN MATERIAL APPEARING HEREIN CONSTITUTE ORIGINAL AND UNPUBLISHED WORK OF SMS ARCHITECTS AND MAY NOT BE DUPLICATED, USED OR DISCLOSED WITHOUT WRITTEN CONSENT OF THE ARCHITECT

PROJECT NO. 19019-12
DATE FEBRUARY 10, 2023
DRAWING TITLE
BUILDING 12 - TITLE 24 COMPLIANCE REPORT

DRAWING NO.
E8.1.1

10/11/2024 9:26:11 AM

BIM 360://19274 Dana Point Harbor Revitalization_R21/19274 MEP Dana Point - Bldg 12 R21.rvt

STATE OF CALIFORNIA

Outdoor Lighting

NRCC-LTO-E

CALIFORNIA ENERGY COMMISSION

CERTIFICATE OF COMPLIANCE			NRCC-LTO-E
Project Name:	Dana Point - Bldg 12	Report Page:	(Page 3 of 8)
Project Address:	1290 Harbor Way	Date Prepared:	10/7/2024

F. OUTDOOR LIGHTING FIXTURE SCHEDULE

For new or altered lighting systems demonstrating compliance with §140.7 all new luminaires being installed and any existing luminaires remaining or being moved within the spaces covered by the permit application are included in the Table below. For altered lighting systems using the Existing Power method per §141.0(b)2L only new luminaires being installed and replacement luminaires being installed as part of the project scope are included (ie, existing luminaires remaining or existing luminaires being moved are not included).

Designed Wattage:

01	02		03	04	05	06	07	08	09	10	
Name or Item Tag	Complete Luminaire Description		Watts per luminaire[1, 2]	How is Wattage determined	Total number luminaires[2]	Luminaire Status[3]	Excluded per §140.7(a)	Design Watts	Cutoff Req. > 6,200 initial lumen output §130.2(b)[4]	Field Inspector	
										Pass	Fail
XB121B	XB121B	☐ Linear	7	Mfr. Spec	44	New	☐	308	NA: < 6200 lumens	☐	☐
XB121C	XB121C	☐ Linear	7	Mfr. Spec	8	New	☐	56	NA: < 6200 lumens	☐	☐
XK121B	XK121B	☐ Linear	3	Mfr. Spec	5	New	☐	15	NA: < 6200 lumens	☐	☐
XK121C	XK121C	☐ Linear	3	Mfr. Spec	27	New	☐	81	NA: < 6200 lumens	☐	☐
XK122B	XK122B	☐ Linear	7	Mfr. Spec	1	New	☐	7	NA: < 6200 lumens	☐	☐
XS121	XS121	☐ Linear	10	Mfr. Spec	19	New	☐	190	NA: < 6200 lumens	☐	☐
XZ121	XZ121	☐ Linear	1.5	Mfr. Spec	68	New	☐	102	NA: < 6200 lumens	☐	☐
XZ122	XZ122	☐ Linear	1.5	Mfr. Spec	16	New	☒	---	NA: < 6200 lumens	☐	☐
							Total Design Watts:	759			

B

* NOTES: Selections with a * require a note in the space below explaining how compliance is achieved.
EX: Luminaire is lighting a statue; EXCEPTION 2 to §130.2(b)

[1]*FOOTNOTES: Authority Having Jurisdiction may ask for Luminaire cut sheets to confirm wattage used for compliance per §130.0(c)*
[2] *For linear luminaires, wattage should be indicated as W/lf instead of Watts/luminaire. Total linear feet should be indicated in column 05 instead of number of luminaires.*

Registration Number: Registration Date/Time: Registration Provider: Energysoft
CA Building Energy Efficiency Standards - 2019 Nonresidential Compliance Report Version: 2019.1.003 Schema Version: rev 20200601 Report Generated: 2024-10-07 14:31:13

STATE OF CALIFORNIA

Outdoor Lighting

NRCC-LTO-E

CALIFORNIA ENERGY COMMISSION

CERTIFICATE OF COMPLIANCE			NRCC-LTO-E
Project Name:	Dana Point - Bldg 12	Report Page:	(Page 2 of 8)
Project Address:	1290 Harbor Way	Date Prepared:	10/7/2024

C. COMPLIANCE RESULTS

Results in this table are automatically calculated from data input and calculations in Tables F through I. Note: If any cell on this table says "COMPLIES with Exceptional Conditions" refer to Table D. Exceptional Conditions for guidance or see applicable Table referenced below.

Calculations of Total Allowed Lighting Power (Watts) §140.7 or §141.0(b)2L													Compliance Results			
01		02		03		04		05		06		07		08		09
General Hardscape Allowance §140.7(d)1 (See Table I)	+	Per Application §140.7(d)2 (See Table J)	+	Sales Frontage §140.7(d)2 (See Table K)	+	Ornamental §140.7(d)2 (See Table L)	+	Per Specific Area §140.7(d)2 (See Table M)	OR	Existing Power Allowance §141.0(b)2L (See Table N)	=	**Total Allowed** (Watts)	≥	**Total Actual** (Watts)		**07 must be >= 08**
418.35	+	---	+	---	+	---	+	759	OR	---	=	1,177.35	≥	759		COMPLIES
Cutoff Compliance (See Table G for Details)																N/A
Controls Compliance (See Table H for Details)																COMPLIES

D. EXCEPTIONAL CONDITIONS

This table is auto-filled with uneditable comments because of selections made or data entered in tables throughout the form.

E. ADDITIONAL REMARKS

This table includes remarks made by the permit applicant to the Authority Having Jurisdiction.

Registration Number: Registration Date/Time: Registration Provider: Energysoft
CA Building Energy Efficiency Standards - 2019 Nonresidential Compliance Report Version: 2019.1.003 Schema Version: rev 20200601 Report Generated: 2024-10-07 14:31:13

STATE OF CALIFORNIA

Outdoor Lighting

NRCC-LTO-E

CALIFORNIA ENERGY COMMISSION

Zoning: CanningK 11/13/2024

CERTIFICATE OF COMPLIANCE			NRCC-LTO-E
Project Name:	Dana Point - Bldg 12	Report Page:	(Page 1 of 8)
Project Address:	1290 Harbor Way	Date Prepared:	10/7/2024

Building&Safety: OCPWAzarvandB 12/22/2025

Permits: BNR21-0246, ELE21-0853, MEC21-0514, PLB21-0900

County of Orange - OC Public Works
OC Development Services
APPROVED
This set of plans and specifications must be kept on the job at all times. It is unlawful to make any changes or alterations to these plans without written permission from OC Public Works, OC Development Services of Orange County. The stamping of these plan specifications SHALL NOT be held to permit or be an approval of the violation of any provisions of any County Ordinance or State law.
Hadi Tatabatabaee
BUILDING OFFICIAL

A. GENERAL INFORMATION

01	Project Location (city)	Dana Point	04	Total Illuminated Hardscape Area (ft^2): 614
02	Climate Zone	6		
03	Outdoor Lighting Zone per Title 24 Part 1 §10.114 or as designated by Authority Having Jurisdiction (AHJ):			
☐	LZ-0: Very Low - Undeveloped Parkland	☐ LZ-2: Moderate - Rural Areas	☐	LZ-4: High - Must be reviewed by CA Energy Commission for Approval
☐	LZ-1: Low - Developed Parkland	☒ LZ-3: Moderately High - Urban Areas		

B. PROJECT SCOPE

This table includes outdoor lighting systems that are within the scope of the permit application and are demonstrating compliance using the prescriptive path outlined in §140.7 or §141.0(b)2L for alterations.

My Project Consists of:

01	02		
☒ New Lighting System	Must Comply with Allowances from §140.7		
☐ Altered Lighting System	Is your alteration increasing the connected lighting load (Watts)?	◯ Yes	◯ No

03	04	05
% of Existing Luminaires Being Altered[1]	Sum Total of Luminaires Being Added or Altered	Calculation Method
☐ < 10% ☐ >= 10% and < 50% ☐ >= 50%		

Please proceed to Table F. Outdoor Lighting Fixture Schedule to define the project's luminaires.

[1] *FOOTNOTES: % of Existing Luminaires Being Altered = (Sum Total of Luminaires Being Added or Altered / Existing Luminaires within the Scope of the Permit Application) x 100.*

Registration Number: Registration Date/Time: Registration Provider: Energysoft
CA Building Energy Efficiency Standards - 2019 Nonresidential Compliance Report Version: 2019.1.003 Schema Version: rev 20200601 Report Generated: 2024-10-07 14:31:13

STATE OF CALIFORNIA

Outdoor Lighting

NRCC-LTO-E

CALIFORNIA ENERGY COMMISSION

CERTIFICATE OF COMPLIANCE			NRCC-LTO-E
Project Name:	Dana Point - Bldg 12	Report Page:	(Page 6 of 8)
Project Address:	1290 Harbor Way	Date Prepared:	10/7/2024

M. LIGHTING ALLOWANCE: PER SPECIFIC AREA

This table includes areas using the wattage allowance per specific area from Table 140.7-B . More than one specific area allowance may be taken in a single project, if applicable. However, multiple specific area allowances may not be taken for the exact same area on the site.

01	02	03	04	05	06	07	08	09	10
		CALCULATED ALLOWANCE (Watts)			DESIGN WATTS				
Area Description	Specific Area Type per Table 140.7-B	Specific Area (ft^2)[1]	Allowed Density (W/ft^2)	Extra Allowance (Watts)	Luminaire Name or Item Tag	Watts per Luminaire	# of Luminaires	Design Watts	Additional Allowance (Watts)
Level 1 Canopies	SalesCanopy	2656	0.62	1652	XB121B	7	15	105	255
					XB121C	7	8	56	
					XK121C	3	24	72	
					XK121B	3	5	15	
					XK122B	7	1	7	
							Total Design Watts for this Area:	255	
Level 2 Canopies	SalesCanopy	1950	0.62	1212.9	XB121B	7	29	203	402
					XK121C	3	3	9	
					XS121	10	19	190	
							Total Design Watts for this Area:	402	
Level 2 Building Facade	BuildingFacade	670	0.17	113.9	XZ121	1.5	68	102	102
							Total Design Watts for this Area:	102	
								Total Allowance (Watts) All Areas:	759

Registration Number: Registration Date/Time: Registration Provider: Energysoft
CA Building Energy Efficiency Standards - 2019 Nonresidential Compliance Report Version: 2019.1.003 Schema Version: rev 20200601 Report Generated: 2024-10-07 14:31:13

STATE OF CALIFORNIA

Outdoor Lighting

NRCC-LTO-E

CALIFORNIA ENERGY COMMISSION

CERTIFICATE OF COMPLIANCE			NRCC-LTO-E
Project Name:	Dana Point - Bldg 12	Report Page:	(Page 5 of 8)
Project Address:	1290 Harbor Way	Date Prepared:	10/7/2024

I. LIGHTING POWER ALLOWANCE (per §140.7)

	01				
This table includes areas using allowance calculations per §140.7. General Hardscape Allowance is per Table 140.7-A while "Use it or lose it" Allowances are per Table 140.7-B . Indicate which allowances are being used to expand sections for user input. Luminaires that qualify for one of the "Use it or lose it" allowances shall not qualify for another "Use it or lose it" allowance.	☒ General Hardscape Allowance Table I (below)	"Use it or lose it" Allowance (select all that apply) (select all that apply): ☐ Per Application Table J	☐ Sales Frontage Table K	☐ Ornamental Table L	☒ Per Specific Area Table M

Calculated General Hardscape Lighting Power Allowance per Table 140.7-A (LZ 0, 1 & 4)

Calculated General Hardscape Lighting Power Allowance per Table 140.7-A (LZ 2 & 3)

02	03	04	05	06	07	08	9	10
		Area Wattage Allowance (AWA)			Area Wattage Allowance (AWA)			
Area Description	Surface Type	Illuminated Area (ft^2)	Allowed Density (W/ft^2)	Area Allowance (Watts)	Perimeter Length (lf)	Allowed Density (W/lf)	Linear Allowance (Watts)	Total General AWA + LWA (Watts)
							Initial Wattage Allowance for Entire Site (Watts):	350
							Total General Hardscape Allowance (Watts):	418

J. LIGHTING ALLOWANCE: PER APPLICATION

This section does not apply to this project.

K. LIGHTING ALLOWANCE: SALES FRONTAGE

This section does not apply to this project.

L. LIGHTING ALLOWANCE: ORNAMENTAL

This section does not apply to this project.

Registration Number: Registration Date/Time: Registration Provider: Energysoft
CA Building Energy Efficiency Standards - 2019 Nonresidential Compliance Report Version: 2019.1.003 Schema Version: rev 20200601 Report Generated: 2024-10-07 14:31:13

STATE OF CALIFORNIA

Outdoor Lighting

NRCC-LTO-E

CALIFORNIA ENERGY COMMISSION

CERTIFICATE OF COMPLIANCE			NRCC-LTO-E
Project Name:	Dana Point - Bldg 12	Report Page:	(Page 4 of 8)
Project Address:	1290 Harbor Way	Date Prepared:	10/7/2024

F. OUTDOOR LIGHTING FIXTURE SCHEDULE

For new or altered lighting systems demonstrating compliance with §140.7 all new luminaires being installed and any existing luminaires remaining or being moved within the spaces covered by the permit application are included in the Table below. For altered lighting systems using the Existing Power method per §141.0(b)2L only new luminaires being installed and replacement luminaires being installed as part of the project scope are included (ie, existing luminaires remaining or existing luminaires being moved are not included).

Designed Wattage:

01	02	03	04	05	06	07	08	09	10

[3] *Select "New" for new luminaires in a new outdoor lighting project, or for added luminaires in an alteration. Select "Altered" for replacement luminaires in an alteration. Select "Existing to Remain" for existing luminaires within the project scope that are not being altered and are remaining. Select "Existing Reinstalled" for existing luminaires which are being removed and reinstalled as part of the project scope.*
[4] *Compliance with mandatory cutoff requirements is required for luminaires with initial lumen output >= 6,200 unless exempted by §130.2(b)*

G. CUTOFF REQUIREMENTS (BUG)

This section does not apply to this project.

H. OUTDOOR LIGHTING CONTROLS

This table demonstrates compliance with controls requirements for all new or altered luminaires installed as part of the permit application. For alteration projects, luminaires which are existing to remain (ie untouched) and luminaires which are removed and reinstalled (wiring only) do not need to be included in this table even if they are within the spaces covered by the permit application.
*When an option having a * is selected, the notes section of this table must be completed. The lighting controls section of the Compliance Summary Table on the first page will show "DOES NOT COMPLY" if the notes are left blank.*

Mandatory Controls

01	02	03	04	05	
Area Description	Shut-Off §130.2(c)1	Auto-Schedule §130.2(c)2	Motion Sensor §130.2(c)3	Field Inspector	
				Pass	Fail
EXTERIOR	Photocontrol	Yes	Yes	☐	☐

** NOTES: Controls with a * require a note in the space below explaining how compliance is achieved.*
EX: Not permitted by health & safety to be turned off; EXCEPTION 1 to §130.2(c)

Registration Number: Registration Date/Time: Registration Provider: Energysoft
CA Building Energy Efficiency Standards - 2019 Nonresidential Compliance Report Version: 2019.1.003 Schema Version: rev 20200601 Report Generated: 2024-10-07 14:31:13

CITY OF DANA POINT
PLANNING DIVISION
This plan has been reviewed for ZONING ONLY and meets the requirements of Title 9 of the Dana Point Municipal Code.
APPROVED KBN
DATE 10/21/24
COMMENTS BUILDING 12 (OC PERMIT PKG21-0516) PER CDP13-0018(I).

STATE OF CALIFORNIA

Outdoor Lighting

NRCC-LTO-E

CALIFORNIA ENERGY COMMISSION

CERTIFICATE OF COMPLIANCE			NRCC-LTO-E
Project Name:	Dana Point - Bldg 12	Report Page:	(Page 8 of 8)
Project Address:	1290 Harbor Way	Date Prepared:	10/7/2024

DOCUMENTATION AUTHOR'S DECLARATION STATEMENT

I certify that this Certificate of Compliance documentation is accurate and complete.

Documentation Author Name: Rinah Park	Documentation Author Signature: [signature]
Company: Linwood Engineering, Inc.	Signature Date: 2024-10-07
Address: 2301 Dupont Dr. STE 150	CEA/ HERS Certification Identification (if applicable): N/A
City/State/Zip: Irvine CA 92612	Phone: 714.424.0001

RESPONSIBLE PERSON'S DECLARATION STATEMENT

I certify the following under penalty of perjury, under the laws of the State of California:

1. The information provided on this Certificate of Compliance is true and correct.
2. I am eligible under Division 3 of the Business and Professions Code to accept responsibility for the building design or system design identified on this Certificate of Compliance (responsible designer)
3. The energy features and performance specifications, materials, components, and manufactured devices for the building design or system design identified on this Certificate of Compliance conform to the requirements of Title 24, Part 1 and Part 6 of the California Code of Regulations.
4. The building design features or system design features identified on this Certificate of Compliance are consistent with the information provided on other applicable compliance documents, worksheets, calculations, plans and specifications submitted to the enforcement agency for approval with this building permit application.
5. I will ensure that a completed signed copy of this Certificate of Compliance shall be made available with the building permit(s) issued for the building, and made available to the enforcement agency for all applicable inspections. I understand that a completed signed copy of this Certificate of Compliance is required to be included with the documentation the builder provides to the building owner at occupancy.

Responsible Designer Name: Robert J. Hatch	Responsible Designer Signature: [signature]
Company: Linwood Engineering, Inc.	Date Signed: 2024-10-07
Address: 2301 Dupont Dr. Suite 150	License: E16118
City/State/Zip: Irvine CA 92612	Phone: 714-424-0001

Registration Number: Registration Date/Time: Registration Provider: Energysoft
CA Building Energy Efficiency Standards - 2019 Nonresidential Compliance Report Version: 2019.1.003 Schema Version: rev 20200601 Report Generated: 2024-10-07 14:31:13

STATE OF CALIFORNIA

Outdoor Lighting

NRCC-LTO-E

CALIFORNIA ENERGY COMMISSION

CERTIFICATE OF COMPLIANCE			NRCC-LTO-E
Project Name:	Dana Point - Bldg 12	Report Page:	(Page 7 of 8)
Project Address:	1290 Harbor Way	Date Prepared:	10/7/2024

M. LIGHTING ALLOWANCE: PER SPECIFIC AREA

[1] *FOOTNOTES: See Table 140.7-B for rules for calculating the specific areas (ft^2 for these additional lighting allowances.*
[2] *For luminaires indicated in Table F as linear, wattage in column 07 is W/lf instead of Watts/luminaire. Total linear feet should be indicated in column 08 instead of number of luminaires.*

N. EXISTING CONDITIONS POWER ALLOWANCE (alterations only)

This section does not apply to this project.

O. DECLARATION OF REQUIRED CERTIFICATES OF INSTALLATION

Selections have been made based on information provided in this document. If any selection have been changed by permit applicant, an explanation should be included in Table E. Additional Remarks. These documents must be provided to the building inspector during construction and can be found online at https://www.energy.ca.gov/title24/2019standards/2019_compliance_documents/Nonresidential_Documents/NRCI/

Form/Title	Field Inspector	
	Pass	Fail
NRCI-LTO-01-E - Must be submitted for all buildings	☐	☐
NRCI-LTO-02-E- Must be submitted for a lighting control system, or for an Energy Management Control System (EMCS), to be recognized for compliance.	☐	☐

P. DECLARATION OF REQUIRED CERTIFICATES OF ACCEPTANCE

Selections have been made based on information provided in this document. If any selection have been changed by permit applicant, an explanation should be included in Table E. Additional Remarks. These documents must be provided to the building inspector during construction and must be completed through an Acceptance Test Technician Certification Provider (ATTCP). For more information visit: http://www.energy.ca.gov/title24/attcp/providers.html

Form/Title	Systems/Spaces To Be Field Verified	Field Inspector	
		Pass	Fail
NRCA-LTO-02-A - Must be submitted for all outdoor lighting controls except for alterations where controls are added to <= 20 luminaires.	☐	☐	

Registration Number: Registration Date/Time: Registration Provider: Energysoft
CA Building Energy Efficiency Standards - 2019 Nonresidential Compliance Report Version: 2019.1.003 Schema Version: rev 20200601 Report Generated: 2024-10-07 14:31:13

SMSARCHITECTS
100 Progress #250
Irvine, California 92618
949.757.3240 | www.sms-arch.com

CONSTANT
LINWOOD ENGINEERING INC
2301 dupont drive, suite 150
irvine, ca 92612 • 714.424.0001
www.linwoodengineering.com

DANA POINT HARBOR PARTNERS

PROJECT NAME:
DANA POINT HARBOR COMMERCIAL CORE
BUILDING 12
1290 HARBOR WAY
DANA POINT, CA 92629

CLIENT
B|W|P BURNHAM|WARD PROPERTIES

Robert J. Hatch, P.E.
CA # E16118
REGISTERED PROFESSIONAL ENGINEER ROBERT J. HATCH E16118 ELECTRICAL STATE OF CALIFORNIA
EXP. 12/31/25

No.	DATE	ISSUE
	06/01/2021	COUNTY SUBMITTAL
	09/24/2021	COUNTY RESUBMITTAL
	12/06/2022	50% DESIGN DEVELOPMENT
	02/10/2023	100% DESIGN DEVELOPMENT
	03/03/2023	50% CD PROGRESS SET
	04/21/2023	COUNTY RESUBMITTAL
A	07/24/2023	CITY RESUBMITTAL
B	10/11/2024	LIGHTING UPDATES

DRAWINGS AND WRITTEN MATERIAL APPEARING HEREIN CONSTITUTE ORIGINAL AND UNPUBLISHED WORK OF SMS ARCHITECTS AND MAY NOT BE DUPLICATED, USED OR DISCLOSED WITHOUT WRITTEN CONSENT OF THE ARCHITECT

PROJECT NO. 19019-12
DATE FEBRUARY 10, 2023
DRAWING TITLE
BUILDING 12 - TITLE 24 COMPLIANCE REPORT

DRAWING NO.
E8.1.2

10/11/2024 9:26:14 AM

BIM 360://19274 Dana Point Harbor Revitalization_R21/19274 MEP Dana Point - Bldg 12 R21.rvt

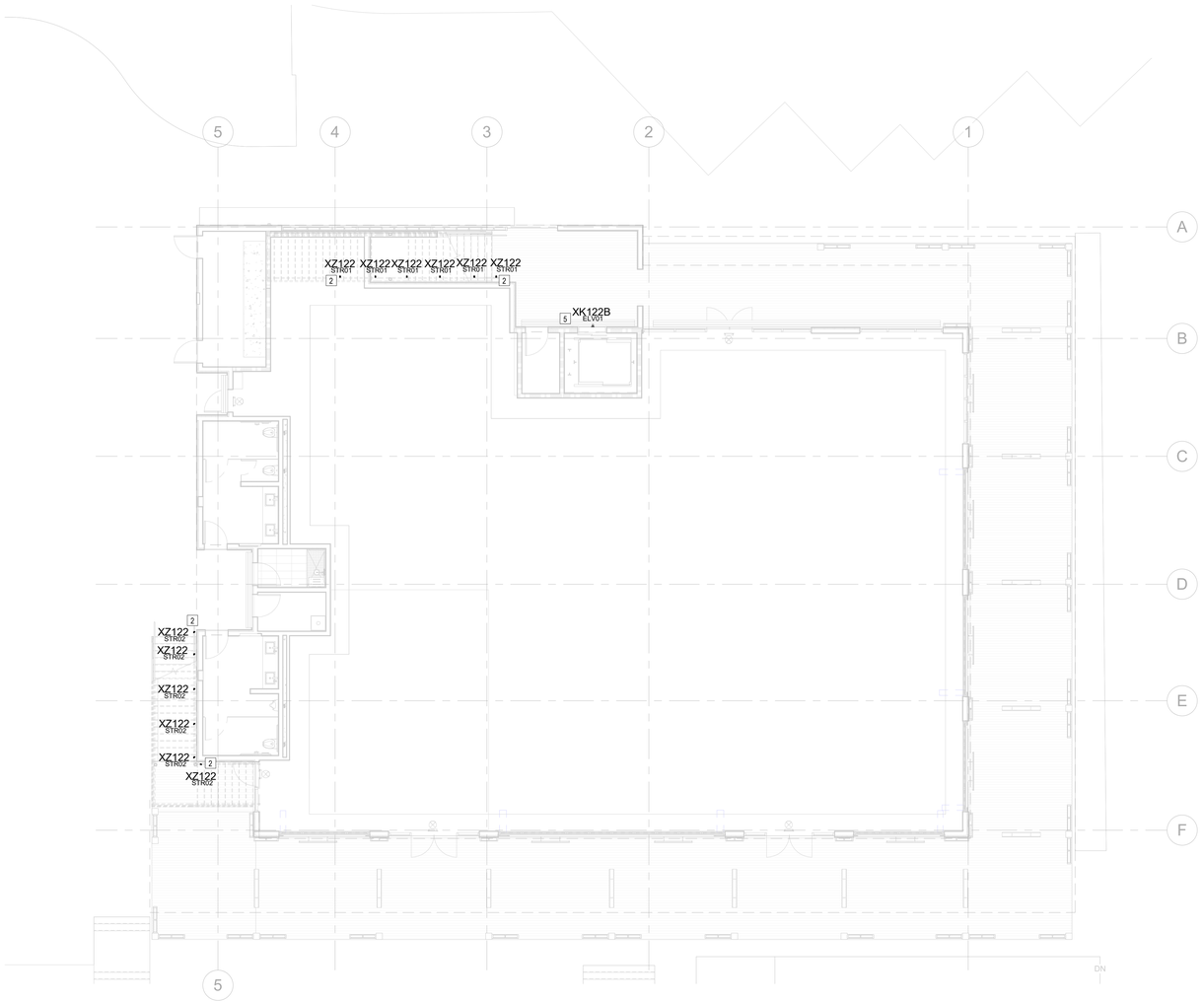

1 LEVEL 1 LIGHTING FLOOR PLAN
1/8" = 1'-0"

CITY OF DANA POINT
PLANNING DIVISION

This plan has been reviewed for ZONING ONLY and meets the requirements of Title 9 of the Dana Point Municipal Code.

APPROVED_KBN

DATE_10/21/24

COMMENTS_BUILDING 12 (OC PERMIT PKG21-0516) PER CDP13-0018(I).

Zoning: CanningK 11/13/2024

Building&Safety: OCPWAzarvandB 12/22/2025

Permits: BNR21-0246, ELE21-0853, MEC21-0514, PLB21-0900

County of Orange - OC Public Works
OC Development Services
APPROVED

This set of plans and specifications must be kept on the job at all times. It is unlawful to make any changes or alterations to these plans without written permission from OC Public Works, OC Development Services of Orange County. The stamping of these plan specifications SHALL NOT be held to permit or be an approval of the violation of any provisions of any County Ordinance or State law.

Hani Tahsbsaee
BUILDING OFFICIAL

LIGHTING KEYNOTES	
1	XB121B/C DOWNLIGHT RECESS MOUNTS IN SOFFIT TO LIGHT ENTRY AREA BELOW. TYPICAL.
2	XZ122 MINI ACCENT LIGHT INTEGRATES IN HANDRAIL CENTERED BETWEEN POSTS TO ILLUMINATE WALKWAY/STAIR TREAD. REQUIRES REMOTE POWER SUPPLY HIDDEN FROM GUESTS' VIEW, BUT MAINTENANCE ACCESSIBLE. CONTRACTOR TO COORDINATE SHOP DRAWINGS. TYPICAL.
3	XB121B DOWNLIGHT RECESS MOUNTS IN BEAM TO LIGHT DECK AREA BELOW. TYPICAL.
4	XK121C ACCENT SURFACE MOUNTS TO STRUCTURE TO LIGHT DECK AREA BELOW. TYPICAL.
5	XK122B LOW PROFILE DOWNLIGHT SURFACE MOUNTS TO FACADE. BOTTOM OF FIXTURE TO BE +6" ABOVE DOOR FRAME.
6	XK121B ACCENT SURFACE MOUNTS TO STRUCTURE TO LIGHT SCREEN. TYPICAL.
7	XS121 STEPLIGHT RECESS MOUNTS IN WALL CENTERED AT +1'-6" TO ILLUMINATE DECK. TYPICAL.
9	XZ121 LINEAR TAPELIGHT SURFACE MOUNTS TO TOP OF CANOPY TO GLOW FACADE ABOVE. TYPICAL.

LIGHTING GENERAL NOTE
ALL LIGHTING FIXTURES THAT ARE ATTACHED TO THE WATER-FACING ELEVATION OF THE BUILDING SHALL BE DESIGNED AND LOCATED SO THAT LIGHT LIGHT RAYS ARE AIMED DOWNWARD ONTO THE SITE, PER SECTION 5.5(p) OF THE DANA POINT HARBOR REGULATION.

SMS ARCHITECTS
100 Progress | Suite 250
Irvine, California 92618
949.757.3240 | www.sms-arch.com

CONSTANT
firstcircle
3187-C AIRWAY AVE
COSTA MESA, CA 92626
949 . 681 . 0500

DANA POINT HARBOR PARTNERS

PROJECT NAME
DANA POINT HARBOR COMMERCIAL CORE
BUILDING 12
1290 HARBOR WAY
DANA POINT, CA 92629

CLIENT
BWP PROPERTIES
BURNHAM | WARD

No.	DATE	ISSUE

DRAWINGS AND WRITTEN MATERIAL APPEARING HEREIN CONSTITUTE ORIGINAL AND UNPUBLISHED WORK OF SMS ARCHITECTS AND MAY NOT BE DUPLICATED, USED OR DISCLOSED WITHOUT WRITTEN CONSENT OF THE ARCHITECT

PROJECT NO 22039
DATE JANUARY 25, 2023
DRAWING TITLE
LEVEL 1 LIGHTING PLAN

DRAWING NO
LT2.0.1

C:\Users\michael\Documents\22039_DPH_Building 12-LIGHT_R21_michaelVX.0QR.rvt

2/23/2024 10:27:06 AM

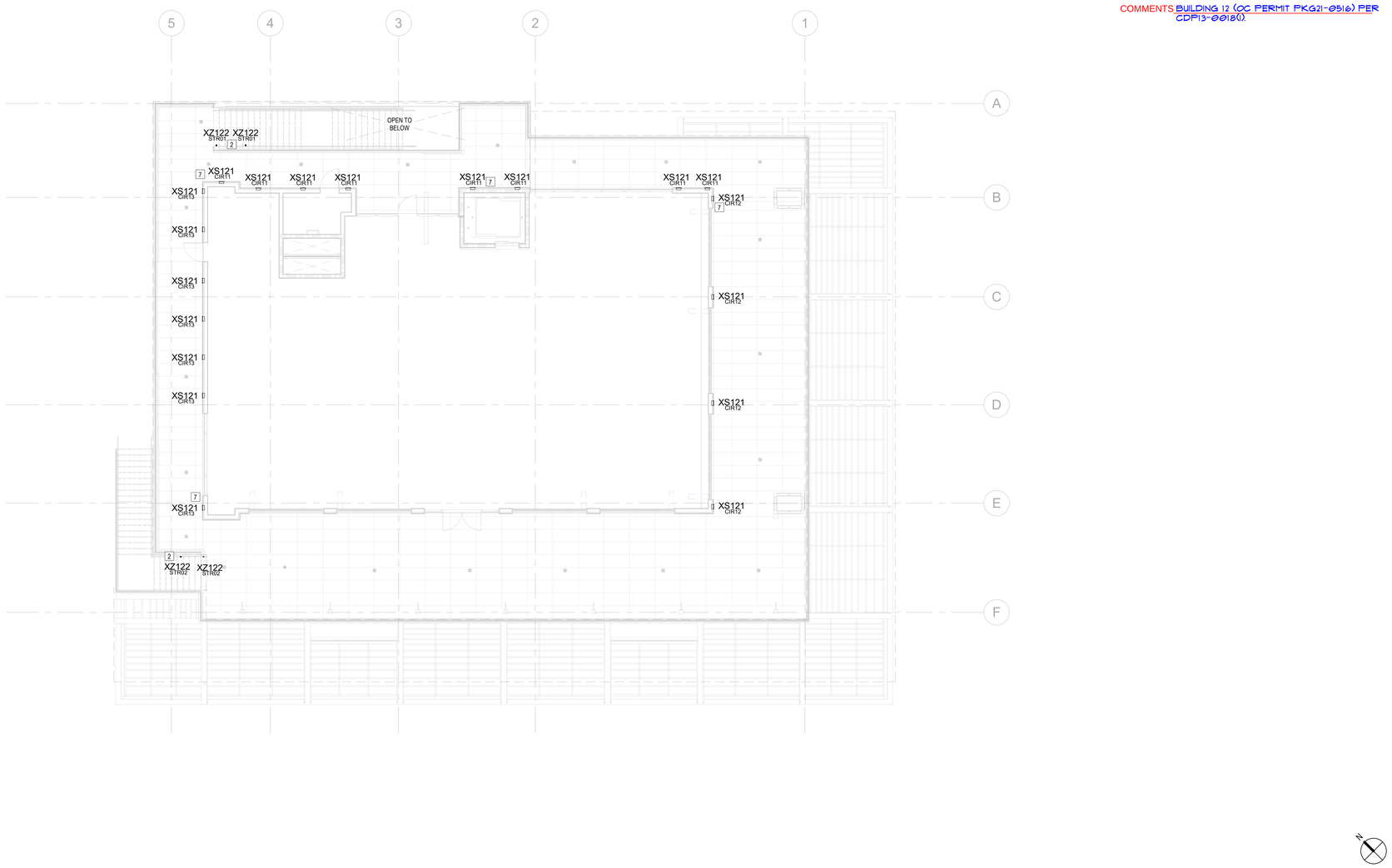

1 LEVEL 2 LIGHTING FLOOR PLAN
1/8" = 1'-0"

CITY OF DANA POINT
PLANNING DIVISION

This plan has been reviewed for ZONING ONLY and meets the requirements of Title 9 of the Dana Point Municipal Code.

APPROVED KBN

DATE 10/21/24

COMMENTS BUILDING 12 (OC PERMIT PKG21-0516) PER CDP13-0018(I).

Zoning: CanningK 11/13/2024

Building&Safety: OCPWAzarvandB 12/22/2025

Permits: BNR21-0246, ELE21-0853, MEC21-0514, PLB21-0900

County of Orange - OC Public Works
OC Development Services
APPROVED

This set of plans and specifications must be kept on the job at all times. It is unlawful to make any changes or alterations to these plans without written permission from OC Public Works, OC Development Services of Orange County. The stamping of these plan specifications SHALL NOT be held to permit or be an approval of the violation of any provisions of any County Ordinance or State law.

Hadi Tabatabaee
BUILDING OFFICIAL

LIGHTING KEYNOTES	
1	XB121B/C DOWNLIGHT RECESS MOUNTS IN SOFFIT TO LIGHT ENTRY AREA BELOW. TYPICAL.
2	XZ122 MINI ACCENT LIGHT INTEGRATES IN HANDRAIL CENTERED BETWEEN POSTS TO ILLUMINATE WALKWAY/STAIR TREAD. REQUIRES REMOTE POWER SUPPLY HIDDEN FROM GUESTS' VIEW, BUT MAINTENANCE ACCESSIBLE. CONTRACTOR TO COORDINATE SHOP DRAWINGS. TYPICAL.
3	XB121B DOWNLIGHT RECESS MOUNTS IN BEAM TO LIGHT DECK AREA BELOW. TYPICAL.
4	XK121C ACCENT SURFACE MOUNTS TO STRUCTURE TO LIGHT DECK AREA BELOW. TYPICAL.
5	XK122B LOW PROFILE DOWNLIGHT SURFACE MOUNTS TO FACADE. BOTTOM OF FIXTURE TO BE +6" ABOVE DOOR FRAME.
6	XK121B ACCENT SURFACE MOUNTS TO STRUCTURE TO LIGHT SCREEN. TYPICAL.
7	XS121 STEPLIGHT RECESS MOUNTS IN WALL CENTERED AT +1'-6" TO ILLUMINATE DECK. TYPICAL.
9	XZ121 LINEAR TAPELIGHT SURFACE MOUNTS TO TOP OF CANOPY TO GLOW FACADE ABOVE. TYPICAL.

LIGHTING GENERAL NOTE
ALL LIGHTING FIXTURES THAT ARE ATTACHED TO THE WATER-FACING ELEVATION OF THE BUILDING SHALL BE DESIGNED AND LOCATED SO THAT LIGHT LIGHT RAYS ARE AIMED DOWNWARD ONTO THE SITE, PER SECTION 5.5(p) OF THE DANA POINT HARBOR REGULATION.

SMS ARCHITECTS
100 Progress | Suite 250
Irvine, California 92618
949.757.3240 | www.sms-arch.com

CONSTANT
firstcircle
3187-C AIRWAY AVE
COSTA MESA, CA 92626
949 . 681 . 0500

DANA POINT HARBOR PARTNERS

PROJECT NAME
DANA POINT HARBOR COMMERCIAL CORE
BUILDING 12
1290 HARBOR WAY
DANA POINT, CA 92629

CLIENT
BURNHAM|WARD PROPERTIES

No.	DATE	ISSUE

DRAWINGS AND WRITTEN MATERIAL APPEARING HEREIN CONSTITUTE ORIGINAL AND UNPUBLISHED WORK OF SMS ARCHITECTS AND MAY NOT BE DUPLICATED, USED OR DISCLOSED WITHOUT WRITTEN CONSENT OF THE ARCHITECT

PROJECT NO. 22039

DATE JANUARY 25, 2023

DRAWING TITLE
LEVEL 2 LIGHTING PLAN

DRAWING NO.
LT2.0.2

2/23/2024 10:27:08 AM

C:\Users\michael\Documents\22039_DPH_Building 12-LIGHT_R21_michaelXV3QR.rvt

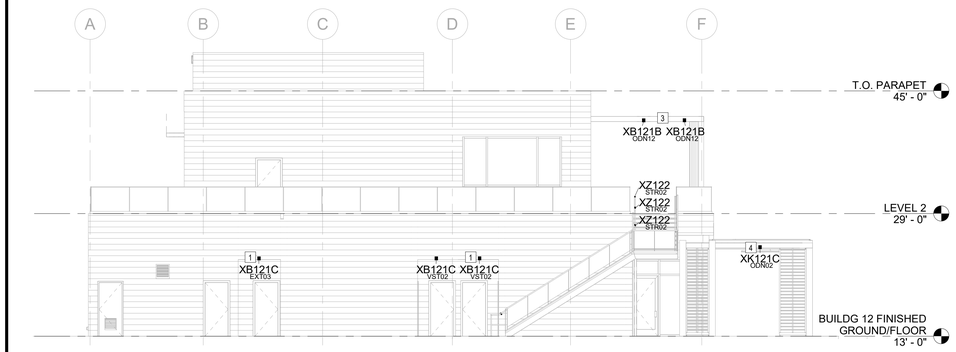

1 WEST ELEVATION
1/8" = 1'-0"

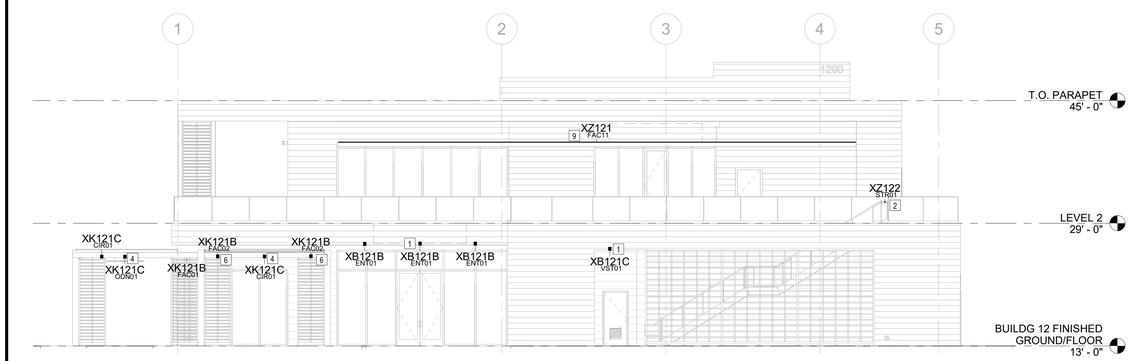

2 NORTH ELEVATION
1/8" = 1'-0"

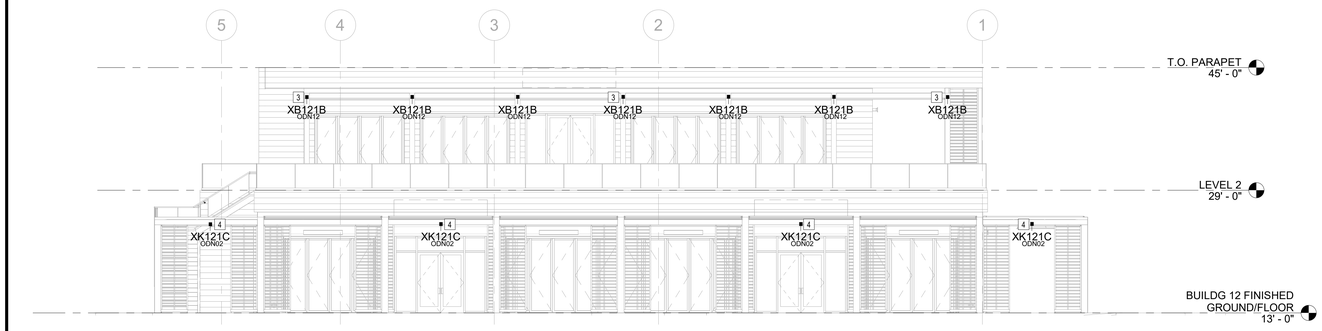

3 SOUTH ELEVATION
1/8" = 1'-0"

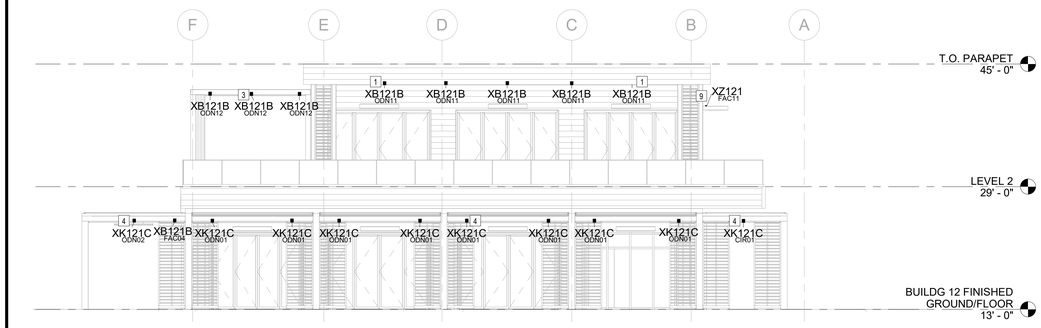

4 EAST ELEVATION
1/8" = 1'-0"

CITY OF DANA POINT
PLANNING DIVISION

This plan has been reviewed for ZONING ONLY and meets the requirements of Title 9 of the Dana Point Municipal Code.

APPROVED KBN

DATE 10/21/24

COMMENTS BUILDING 12 (OC PERMIT PKG21-0516) PER CDP13-0018().

Zoning: CanningK **11/13/2024**

Building&Safety: OCPWAzarvandB **12/22/2025**

Permits: BNR21-0246, ELE21-0853, MEC21-0514, PLB21-0900

County of Orange - OC Public Works
OC Development Services
APPROVED

This set of plans and specifications must be kept on the job at all times. It is unlawful to make any changes or alterations to these plans without written permission from OC Public Works, OC Development Services of Orange County. The stamping of these plan specifications SHALL NOT be held to permit or be an approval of the violation of any provisions of any County Ordinance or State law.

Hani Tahtabaee
BUILDING OFFICIAL

LIGHTING KEYNOTES	
1	XB121B/C DOWNLIGHT RECESS MOUNTS IN SOFFIT TO LIGHT ENTRY AREA BELOW. TYPICAL.
2	XZ122 MINI ACCENT LIGHT INTEGRATES IN HANDRAIL CENTERED BETWEEN POSTS TO ILLUMINATE WALKWAY/STAIR TREAD. REQUIRES REMOTE POWER SUPPLY HIDDEN FROM GUESTS' VIEW, BUT MAINTENANCE ACCESSIBLE. CONTRACTOR TO COORDINATE SHOP DRAWINGS. TYPICAL.
3	XB121B DOWNLIGHT RECESS MOUNTS IN BEAM TO LIGHT DECK AREA BELOW. TYPICAL.
4	XK121C ACCENT SURFACE MOUNTS TO STRUCTURE TO LIGHT DECK AREA BELOW. TYPICAL.
5	XK122B LOW PROFILE DOWNLIGHT SURFACE MOUNTS TO FACADE. BOTTOM OF FIXTURE TO BE +6" ABOVE DOOR FRAME.
6	XK121B ACCENT SURFACE MOUNTS TO STRUCTURE TO LIGHT SCREEN. TYPICAL.
7	XS121 STEPLIGHT RECESS MOUNTS IN WALL CENTERED AT +1'-6" TO ILLUMINATE DECK. TYPICAL.
9	XZ121 LINEAR TAPELIGHT SURFACE MOUNTS TO TOP OF CANOPY TO GLOW FACADE ABOVE. TYPICAL.

LIGHTING GENERAL NOTE
ALL LIGHTING FIXTURES THAT ARE ATTACHED TO THE WATER-FACING ELEVATION OF THE BUILDING SHALL BE DESIGNED AND LOCATED SO THAT LIGHT LIGHT RAYS ARE AIMED DOWNWARD ONTO THE SITE, PER SECTION 5.5(p) OF THE DANA POINT HARBOR REGULATION.

SMS ARCHITECTS
100 Progress | Suite 250
Irvine, California 92618
949.757.3240 | www.sms-arch.com

CONSTANT
firstcircle
3187-C AIRWAY AVE
COSTA MESA, CA 92626
949 . 681 . 0500

DANA POINT HARBOR PARTNERS

PROJECT NAME
DANA POINT HARBOR COMMERCIAL CORE
BUILDING 12
1290 HARBOR WAY
DANA POINT, CA 92629

CLIENT
BWP PROPERTIES
BURNHAM|WARD

No.	DATE	ISSUE

DRAWINGS AND WRITTEN MATERIAL APPEARING HEREIN CONSTITUTE ORIGINAL AND UNPUBLISHED WORK OF SMS ARCHITECTS AND MAY NOT BE DUPLICATED, USED OR DISCLOSED WITHOUT WRITTEN CONSENT OF THE ARCHITECT

PROJECT NO 22039

DATE JANUARY 25, 2023

DRAWING TITLE
EXTERIOR ELEVATIONS

DRAWING NO
LT3.1.1

C:\Users\michael\Documents\22039_DPH_Building 12-LIGHT_R21_michaelVX1KSR.rvt

2/23/2024 10:27:15 AM

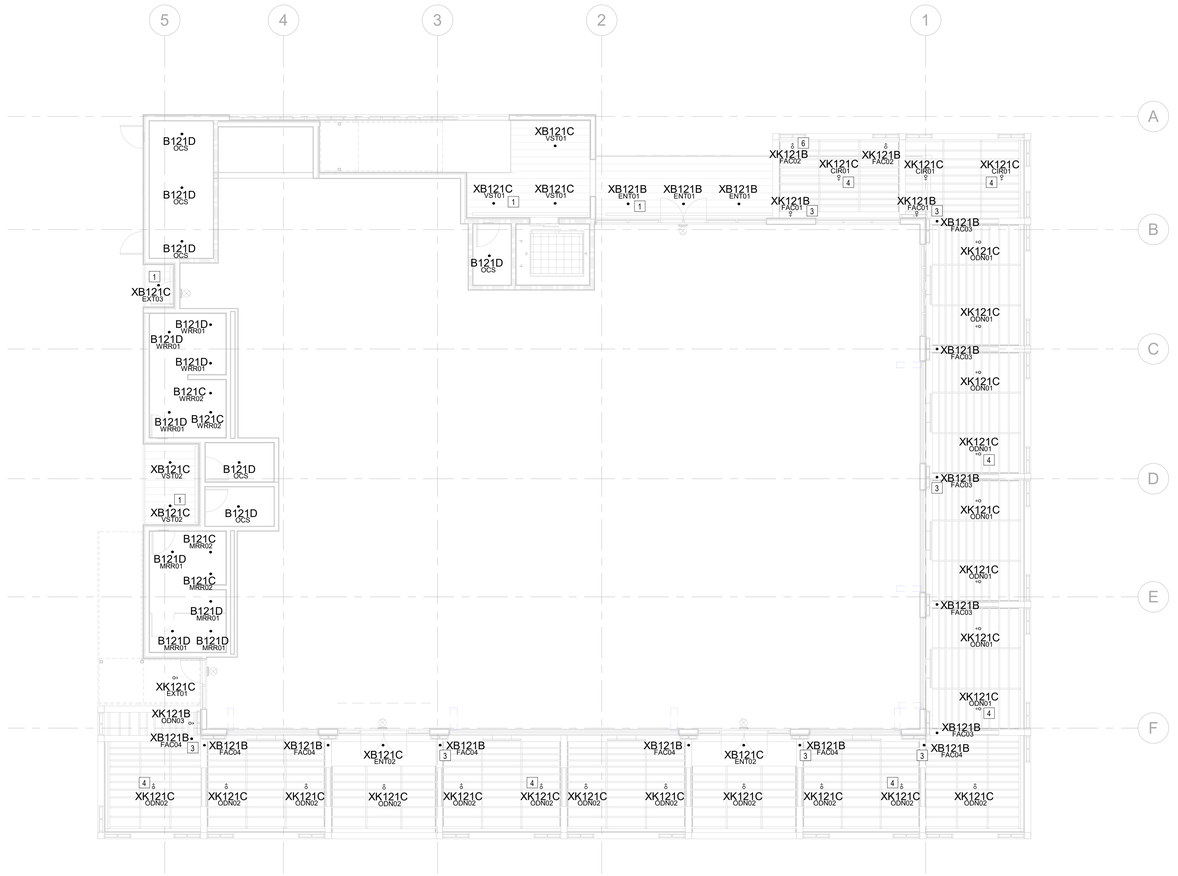

1 LEVEL 1 REFLECTED CEILING PLAN
1/8" = 1'-0"

CITY OF DANA POINT
PLANNING DIVISION

This plan has been reviewed for ZONING ONLY and meets the requirements of Title 9 of the Dana Point Municipal Code.

APPROVED KBN

DATE 10/21/24

COMMENTS BUILDING 12 (OC PERMIT PKG21-0516) PER CDP13-0018(I).

Zoning: CanningK 11/13/2024

Building&Safety: OCPWAzarvandB 12/22/2025

Permits: BNR21-0246, ELE21-0853, MEC21-0514, PLB21-0900

County of Orange - OC Public Works
OC Development Services
APPROVED

This set of plans and specifications must be kept on the job at all times. It is unlawful to make any changes or alterations to these plans without written permission from OC Public Works, OC Development Services of Orange County. The stamping of these plan specifications SHALL NOT be held to permit or be an approval of the violation of any provisions of any County Ordinance or State law.

Hadi Tabatabaee
BUILDING OFFICIAL

LIGHTING KEYNOTES	
1	XB121B/C DOWNLIGHT RECESS MOUNTS IN SOFFIT TO LIGHT ENTRY AREA BELOW. TYPICAL.
2	XZ122 MINI ACCENT LIGHT INTEGRATES IN HANDRAIL CENTERED BETWEEN POSTS TO ILLUMINATE WALKWAY/STAIR TREAD. REQUIRES REMOTE POWER SUPPLY HIDDEN FROM GUESTS' VIEW, BUT MAINTENANCE ACCESSIBLE. CONTRACTOR TO COORDINATE SHOP DRAWINGS. TYPICAL.
3	XB121B DOWNLIGHT RECESS MOUNTS IN BEAM TO LIGHT DECK AREA BELOW. TYPICAL.
4	XK121C ACCENT SURFACE MOUNTS TO STRUCTURE TO LIGHT DECK AREA BELOW. TYPICAL.
5	XK122B LOW PROFILE DOWNLIGHT SURFACE MOUNTS TO FACADE. BOTTOM OF FIXTURE TO BE +6" ABOVE DOOR FRAME.
6	XK121B ACCENT SURFACE MOUNTS TO STRUCTURE TO LIGHT SCREEN. TYPICAL.
7	XS121 STEPLIGHT RECESS MOUNTS IN WALL CENTERED AT +1'-6" TO ILLUMINATE DECK. TYPICAL.
9	XZ121 LINEAR TAPELIGHT SURFACE MOUNTS TO TOP OF CANOPY TO GLOW FACADE ABOVE. TYPICAL.

LIGHTING GENERAL NOTE
ALL LIGHTING FIXTURES THAT ARE ATTACHED TO THE WATER-FACING ELEVATION OF THE BUILDING SHALL BE DESIGNED AND LOCATED SO THAT LIGHT LIGHT RAYS ARE AIMED DOWNWARD ONTO THE SITE, PER SECTION 5.5(p) OF THE DANA POINT HARBOR REGULATION.

SMS ARCHITECTS
100 Progress | Suite 250
Irvine, California 92618
949.757.3240 | www.sms-arch.com

CONSTANT
firstcircle
3187-C AIRWAY AVE
COSTA MESA, CA 92626
949 . 681 . 0500

DANA POINT HARBOR PARTNERS

PROJECT NAME
DANA POINT HARBOR COMMERCIAL CORE
BUILDING 12
1290 HARBOR WAY
DANA POINT, CA 92629

CLIENT
BURNHAM|WARD PROPERTIES

No.	DATE	ISSUE

DRAWINGS AND WRITTEN MATERIAL APPEARING HEREIN CONSTITUTE ORIGINAL AND UNPUBLISHED WORK OF SMS ARCHITECTS AND MAY NOT BE DUPLICATED, USED OR DISCLOSED WITHOUT WRITTEN CONSENT OF THE ARCHITECT

PROJECT NO. 22039

DATE JANUARY 25, 2023

DRAWING TITLE
LEVEL 1 REFLECTED CEILING PLAN

DRAWING NO.
LT6.1.1

2/23/2024 10:27:18 AM

C:\Users\michael\Documents\22039_DPH_Building 12-LIGHT_R21_michaelXV3QR.rvt

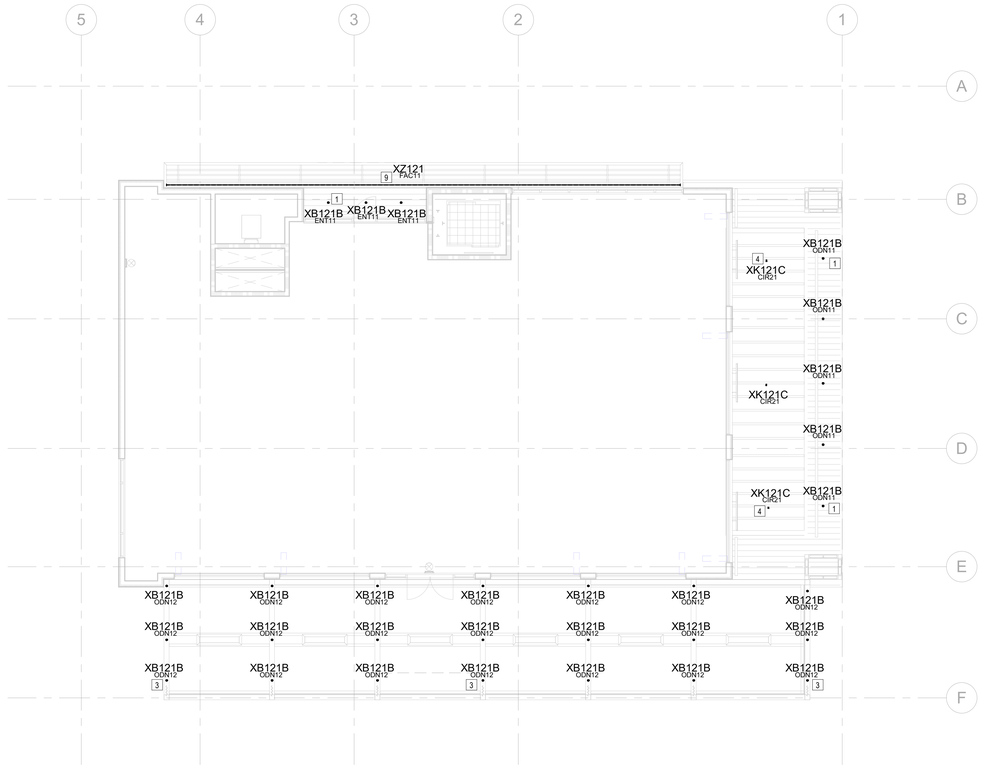

1 LEVEL 2 REFLECTED CEILING PLAN
1/8" = 1'-0"

CITY OF DANA POINT
PLANNING DIVISION

This plan has been reviewed for ZONING ONLY and meets the requirements of Title 9 of the Dana Point Municipal Code.

APPROVED KBN

DATE 10/21/24

COMMENTS BUILDING 12 (OC PERMIT PKG21-0516) PER CDP13-0018(I).

Zoning: CanningK 11/13/2024

Building&Safety: OCPWAzarvandB 12/22/2025

Permits: BNR21-0246, ELE21-0853, MEC21-0514, PLB21-0900

County of Orange - OC Public Works
OC Development Services
APPROVED

This set of plans and specifications must be kept on the job at all times. It is unlawful to make any changes or alterations to these plans without written permission from OC Public Works, OC Development Services of Orange County. The stamping of these plan specifications SHALL NOT be held to permit or be an approval of the violation of any provisions of any County Ordinance or State law.

Hadi Tabatabaee
BUILDING OFFICIAL

LIGHTING KEYNOTES	
1	XB121B/C DOWNLIGHT RECESS MOUNTS IN SOFFIT TO LIGHT ENTRY AREA BELOW. TYPICAL.
2	XZ122 MINI ACCENT LIGHT INTEGRATES IN HANDRAIL CENTERED BETWEEN POSTS TO ILLUMINATE WALKWAY/STAIR TREAD. REQUIRES REMOTE POWER SUPPLY HIDDEN FROM GUESTS' VIEW, BUT MAINTENANCE ACCESSIBLE. CONTRACTOR TO COORDINATE SHOP DRAWINGS. TYPICAL.
3	XB121B DOWNLIGHT RECESS MOUNTS IN BEAM TO LIGHT DECK AREA BELOW. TYPICAL.
4	XK121C ACCENT SURFACE MOUNTS TO STRUCTURE TO LIGHT DECK AREA BELOW. TYPICAL.
5	XK122B LOW PROFILE DOWNLIGHT SURFACE MOUNTS TO FACADE. BOTTOM OF FIXTURE TO BE +6" ABOVE DOOR FRAME.
6	XK121B ACCENT SURFACE MOUNTS TO STRUCTURE TO LIGHT SCREEN. TYPICAL.
7	XS121 STEPLIGHT RECESS MOUNTS IN WALL CENTERED AT +1'-6" TO ILLUMINATE DECK. TYPICAL.
9	XZ121 LINEAR TAPELIGHT SURFACE MOUNTS TO TOP OF CANOPY TO GLOW FACADE ABOVE. TYPICAL.

LIGHTING GENERAL NOTE
ALL LIGHTING FIXTURES THAT ARE ATTACHED TO THE WATER-FACING ELEVATION OF THE BUILDING SHALL BE DESIGNED AND LOCATED SO THAT LIGHT LIGHT RAYS ARE AIMED DOWNWARD ONTO THE SITE, PER SECTION 5.5(p) OF THE DANA POINT HARBOR REGULATION.

SMS ARCHITECTS
100 Progress | Suite 250
Irvine, California 92618
949.757.3240 | www.sms-arch.com

CONSTANT
firstcircle
3187-C AIRWAY AVE
COSTA MESA, CA 92626
949 . 681 . 0500

DANA POINT HARBOR PARTNERS

PROJECT NAME
DANA POINT HARBOR COMMERCIAL CORE
BUILDING 12
1290 HARBOR WAY
DANA POINT, CA 92629

CLIENT
BURNHAM|WARD PROPERTIES

No.	DATE	ISSUE

DRAWINGS AND WRITTEN MATERIAL APPEARING HEREIN CONSTITUTE ORIGINAL AND UNPUBLISHED WORK OF SMS ARCHITECTS AND MAY NOT BE DUPLICATED, USED OR DISCLOSED WITHOUT WRITTEN CONSENT OF THE ARCHITECT

PROJECT NO. 22039

DATE JANUARY 25, 2023

DRAWING TITLE
LEVEL 2 REFLECTED CEILING PLAN

DRAWING NO.
LT6.1.2

C:\Users\michael\Documents\22039_DPH_Building 12-LIGHT_R21_michaelXV3QR.rvt

2/23/2024 10:27:20 AM

SECTION 15300 - FIRE SPRINKLER SYSTEMS

PART 1 - GENERAL

1.01 SUMMARY

A. RELATED DOCUMENTS: CONDITIONS OF THE CONTRACT, DIVISION 1 - GENERAL REQUIREMENTS AND DRAWINGS APPLY TO THE WORK OF THIS SECTION.

1.02 DESCRIPTION OF WORK

A. PROVIDE ALL REQUIRED LABOR, MATERIALS, EQUIPMENT, TESTING AND SERVICES NECESSARY FOR A COMPLETE AND OPERATIONAL SHELL BUILDING FIRE PROTECTION SYSTEM AS HEREINAFTER DESCRIBED AND AS SHOWN ON THE ENGINEERING DRAWINGS.

B. WORK SHALL BEGIN AT THE 6" BLIND FLANGE APPROXIMATELY 5'-0" OUTSIDE THE BUILDING AND SHALL INCLUDE THE FOLLOWING:

1. WET PIPE FIRE SPRINKLER SYSTEM FOR THE ENTIRE BUILDING.
2. COORDINATION OF WORK AND SCHEDULES WITH OTHER TRADES.

C. SITE WORK - PROVIDE THE FOLLOWING:

1. UNDERGROUND PIPING: 6 IN. FIRE SERVICE MAIN FROM BLIND FLANGE TO SPIGOT INSIDE THE BUILDING.
2. THRUST BLOCKING AS REQUIRED.
3. BACKFILL AND COMPACTION.

D. INTERIOR WORK - PROVIDE THE FOLLOWING:

1. ELECTRICALLY SUPERVISED INDICATING CONTROL VALVES.
2. CHECK VALVES.
3. PRESSURE GAUGES.
4. FLOW SWITCHES.
5. OVERHEAD PIPE, FITTINGS, HANGERS AND SPRINKLERS.
6. TEST CONNECTIONS, MAIN DRAINS AND AUXILIARY DRAINS.

E. IT IS INTENDED THAT THE ENGINEERING DRAWINGS AND SPECIFICATION SHALL DESCRIBE AND PROVIDE FOR A WORKING INSTALLATION COMPLETE IN EVERY DETAIL AND ALL ITEMS NECESSARY FOR SUCH COMPLETE INSTALLATION SHALL BE PROVIDED WHETHER OR NOT SPECIFICALLY MENTIONED HEREIN OR SHOWN ON THE ENGINEERING DRAWINGS.

1.03 REFERENCES

A. ALL WORK SHALL BE INSTALLED IN ACCORDANCE WITH ALL APPLICABLE CODES AND REFERENCED DESIGN STANDARDS:

1. CALIFORNIA BUILDING CODE – 2019 EDITION WITH OCFA AMENDMENTS
2. CALIFORNIA FIRE CODE - 2019 EDITION WITH OCFA AMENDMENTS
3. NFPA 13, SPRINKLER SYSTEMS - 2019 EDITION WITH DANA POINT AND OCFA AMENDMENTS
4. NFPA 24, PRIVATE FIRE SERVICE MAINS - 2019 EDITION WITH DANA POINT AND OCFA AMENDMENTS

1.04 SYSTEM DESCRIPTION

A. FIRE SPRINKLER [AND STANDPIPE] SYSTEM DESIGN CRITERIA SHALL BE STRICTLY PER THIS SPECIFICATION.

B. FIRE SPRINKLER SYSTEMS TO PROVIDE FIRE PROTECTION FOR THE ENTIRE BUILDING (SHELL CONFIGURATION).

C. INTERFACE FIRE SPRINKLER SYSTEMS WITH BUILDING FIRE AND SMOKE ALARM SYSTEMS.

D. OFFICE AREAS, VESTIBULES, TOILET ROOMS AND SPRINKLERED COMBUSTIBLE CONCEALED SPACES (LIGHT HAZARD WET PIPE FIRE SPRINKLER SYSTEMS):

- DENSITY - 0.10 GPM/SQ FT
- OPERATING AREA - 1,500 SQ FT
- TEMPERATURE CLASSIFICATION / NOMINAL K-FACTOR / RESPONSE TYPE - ORD / 5.6 / QR
- HOSE STREAM ALLOWANCE - 100 GPM

E. STORAGE AND EQUIPMENT ROOMS, EXTERIOR CANOPIES (ORDINARY HAZARD GROUP I WET PIPE FIRE SPRINKLER SYSTEMS):

- DENSITY – 0.15 GPM/SQ FT
- OPERATING AREA – 1,500 SQ FT
- TEMPERATURE CLASSIFICATION / NOMINAL K-FACTOR / RESPONSE TYPE INT / 5.6 OR 8.0 / QR
- HOSE STREAM ALLOWANCE - 250 GPM

F. SHELL TENANT SPACES (ORDINARY HAZARD GROUP II WET PIPE FIRE SPRINKLER SYSTEMS):

- DENSITY – 0.20 GPM/SQ FT
- OPERATING AREA – 1,500 SQ FT
- TEMPERATURE CLASSIFICATION / NOMINAL K-FACTOR / RESPONSE TYPE – INT / 5.6 OR 8.0 / QR
- HOSE STREAM ALLOWANCE – 250 GPM

G. WATER SUPPLY:

1. A WATER FLOW TEST CONDUCTED ON JANUARY 29, 2019, BY SOUTH COAST WATER DISTRICT, NEAR THE END OF GOLDEN LANTERN AT DANA WHARF, IS PROVIDED FOR REFERENCE BELOW
   - ACTUAL STATIC: 74 PSI
   - ACTUAL RESIDUAL: 40 PSI
   - ACTUAL FLOW: 1,381 GPM
2. A 10% SAFETY FACTOR REDUCTION IS REQUIRED PER OCFA REQUIREMENTS. BOTH THE STATIC AND RESIDUAL PRSSURES SHALL BE REDUCED BY 10% (8 PSI) OF THE STATIC PRESSURE AS DEMONSTRATED BELOW.
   - DESIGN STATIC: 66 PSI
   - DESIGN RESIDUAL: 32 PSI
   - DESIGN FLOW: 1,381 GPM
3. THE SUCCESSFUL FIRE SPRINKLER CONTRACTOR SHALL REQUEST AN UPDATED WATER FLOW TEST TO BE CONDUCTED BY SOUTH COAST WATER DISTRICT FOR THE PURPOSE OF FIRE SPRINKLER SYSTEM DESIGN. A 10% SAFETY FACTOR SHALL BE APPLIED TO THE RESULTS OF THE FLOW TEST PER OCFA REQUIREMENTS SIMILAR TO THE REDUCTION DEMONSTRATED IN THE "DESIGN" WATER SUPPLY COORDINATES SHOWN ABOVE..

H. SPRINKLER SPACING SHALL BE AS SHOWN ON THE ENGINEERING DRAWINGS

1. ACOUSTICAL TILE - LOCATE SPRINKLERS IN ACCORDANCE WITH THE ENGINEERING DRAWINGS. NOT MORE THAN A 3 IN. RADIUS TOLERANCE ABOUT THE POINT IDENTIFIED BY DIMENSION WILL BE ACCEPTED. WHERE ROWS OF SPRINKLERS ARE PROVIDED WITHIN THE SAME CEILING PLANE, ANY PART OF THE TOLERANCE USED FOR ONE SPRINKLER SHALL BE THE SAME FOR ALL OTHERS IN THAT SAME ROW.
2. HARD CEILINGS - LOCATE SPRINKLERS IN ACCORDANCE WITH THE ENGINEERING DRAWINGS. SPRINKLERS SHALL BE IN LINE WITH LIGHT FIXTURES AND OTHER SPRINKLERS WHERE INDICATED ON THE DRAWINGS. COORDINATE CLOSELY WITH THE ELECTRICAL CONTRACTOR.
3. UNFINISHED AREAS - LOCATE SPRINKLERS AS SHOWN ON THE ENGINEERING DRAWINGS.

I. REMOTE FREE-STANDING FIRE DEPARTMENT CONNECTION WILL BE PROVIDED BY SITE UTILITIES CONTRACTOR.

J. PROVIDE ALL NECESSARY OFFSETS, RAISES OR DROPS IN MAIN OR BRANCH LINE PIPING AND AUXILIARY DRAINS REQUIRED BY BUILDING CONDITIONS WHETHER OR NOT SHOWN ON THE ENGINEERING DRAWINGS.

K. EXAMINE THE JOB CONDITIONS AND VERIFY ALL MEASUREMENTS, DISTANCES, ELEVATIONS, CLEARANCES, PIPE SIZES, ETC. REQUIRED TO SUPPORT DESIGN/BUILD PROPOSAL.

L. IT IS UNDERSTOOD, UNLESS SPECIFICALLY INDICATED OTHERWISE, THAT THE PIPE SIZES AS SHOWN ON THE ENGINEERING DRAWINGS WILL BE USED.

1.05 QUALITY ASSURANCE

A. INSTALLER QUALIFICATIONS:

1. INSTALLER'S RESPONSIBILITIES INCLUDE PREPARING SHOP DRAWING SUBMITTAL, FABRICATING AND INSTALLING SPRINKLER SYSTEMS
   a. INSTALLER SHALL BE STATE AND LOCALLY LICENSED.

B. EQUIPMENT AND COMPONENTS NOT SPECIFICALLY SPECIFIED SHALL BE LISTED BY UNDERWRITERS LABORATORIES INC. FOR FIRE PROTECTION SYSTEMS INSTALLATION.

C. ALL FIRE SPRINKLER SYSTEM COMPONENTS SHALL BE INSTALLED FREE OF ANY RUST, CORROSION OR VISIBLE DAMAGE. ALL ITEMS NOT COMPLYING WITH THIS REQUIREMENT SHALL BE REPLACED WITHOUT COST TO THE OWNER.

1.06 REGULATORY REQUIREMENTS

A. ALL WORK SHALL MEET THE REQUIREMENTS OF SECTION 1.03.

B. THE FIRE SPRINKLER CONTRACTOR SHALL NOT PURSUE ANY APPROVALS OR INTERPRETATIONS OF CCI'S CONSTRUCTION DOCUMENTS EXCEPT THROUGH CCI.

C. SPRINKLER PIPING SHALL NOT BE CONCEALED WHERE IT IS INACCESSIBLE UNLESS IT IS FIRST INSPECTED AND ACCEPTED BY A REPRESENTATIVE OF THE AUTHORITY HAVING JURISDICTION.

D. ANY WORK PERFORMED PRIOR TO THE SATISFACTORY REVIEW BY CCI AND APPROVAL BY THE AUTHORITY HAVING JURISDICTION AND THE OWNER, WILL BE SOLELY AT THE FIRE SPRINKLER CONTRACTOR'S RISK.

E. THE SYSTEM WILL NOT BE ACCEPTABLE UNTIL FINAL TESTING AND RECEIPT OF THE CONTRACTOR'S MATERIAL AND TEST CERTIFICATE HAS BEEN OBTAINED.

1.07 SUBMITTALS

A. THE ENGINEERING DRAWINGS HAVE BEEN PREPARED USING REVIT. THE ENGINEERING DRAWINGS ARE 100% REVIT. THESE DOCUMENTS WILL BE MADE AVAILABLE TO THE SUCCESSFUL FIRE SPRINKLER CONTRACTOR IN EITHER ELECTRONIC FORM OR HARD COPY. UTILIZATION OF THESE DOCUMENTS FOR THE DEVELOPMENT OF SHOP DRAWINGS AND SUBMITTALS DOES NOT RELIEVE THE FIRE SPRINKLER CONTRACTOR FROM ANY OF HIS RESPONSIBILITIES REQUIRED HEREIN.

B. SUBMIT THE FOLLOWING:

A. SHOP DRAWINGS. SUBMIT IN .PDF FORMAT OR TWO (2) HARD COPIES OF EACH DRAWING. DRAWINGS WILL BE RETURNED IN THE SAME FORMAT RECEIVED. SUBMITTAL MUST BE COMPREHENSIVE OF ENTIRE PROJECT, COMPLETE IN ALL DETAIL AND THE SAME SCALE AS THE ENGINEERING DRAWINGS.

B. HYDRAULIC CALCULATIONS. SUBMIT IN .PDF FORMAT OR TWO (2) HARD COPIES OR EACH CALCULATION. CALCULATIONS WILL BE RETURNED IN THE SAME FORMAT RECEIVED.

C. MANUFACTURER'S LITERATURE ON ALL SYSTEM EQUIPMENT. SUBMIT IN .PDF FORMAT OR TWO (2) HARD COPIES OF THE LITERATURE. LITERATURE WILL BE RETURN IN THE SAME FORMAT AS RECEIVED. LITERATURE SHALL CLEARLY IDENTIFY EXACTLY WHAT COMPONENTS ARE BEING PROVIDED WHICH SHALL INCLUDE: FINISH, SIZE, TYPE, OPTIONS, ETC. LITERATURE WHICH IS NOT CLEARLY IDENTIFIED WILL BE REJECTED.

C. CCI WILL REVIEW THIS SUBMITTAL FOR CONSISTENCY WITH CCI'S CONSTRUCTION DOCUMENTS.

D. AFTER THE SATISFACTORY REVIEW BY CCI, PROVIDE SUBMITTALS TO THE AUTHORITY HAVING JURISDICTION AND THE INSURANCE UNDERWRITER FOR APPROVAL.

E. THE FIRE SPRINKLER CONTRACTOR SHALL BE RESPONSIBLE FOR RESPONDING, IN WRITING, TO ANY COMMENTS FROM THE AUTHORITY HAVING JURISDICTION OR THE INSURANCE UNDERWRITER WITHIN TEN (10) WORKING DAYS AFTER THE RECEIPT OF THEIR COMMENTS. COPIES OF THE RESPONSE SHALL BE SENT TO THE GENERAL CONTRACTOR AND CCI.

SECTION 15300 - FIRE SPRINKLER SYSTEMS - CONTINUED

1.08 AS-BUILT DRAWINGS

A. PROVIDE AS-BUILT DRAWINGS IN ACCORDANCE WITH REQUIREMENTS OF THE GENERAL CONDITIONS OF THE CONTRACT AND NFPA 13.

1.09 OPERATION AND MAINTENANCE DATA

A. PROVIDE OPERATING AND MAINTENANCE INSTRUCTIONS TO THE OWNER IN ACCORDANCE WITH REQUIREMENTS OF THE GENERAL CONDITIONS OF THE CONTRACT AND NFPA 13.

1.10 WARRANTY

A. REPAIR ALL DEFECTIVE WORKMANSHIP OR REPLACE ALL DEFECTIVE MATERIALS FOR A PERIOD OF ONE YEAR FROM THE DATE OF ACCEPTANCE BY THE OWNER. WORKMANSHIP OR EQUIPMENT FOUND TO BE DEFECTIVE DURING THAT PERIOD SHALL BE REPLACED WITHOUT COST TO THE OWNER.

PART 2 - PRODUCTS

2.01 PIPING

A. UNDERGROUND PIPING: PER LOCAL REQUIREMENTS AND NFPA 13 AND NFPA 24. PIPE SHALL HAVE A MINIMUM RATED WORKING PRESSURE OF 150 PSI.

B. OVERHEAD PIPE: PER LOCAL REQUIREMENTS AND NFPA 13. ALL PIPE SHALL HAVE A CORROSION RESISTANCE RATIO (CRR) EQUAL TO OR GREATER THAN 1.00. REFER TO THE CURRENT UL FIRE PROTECTION EQUIPMENT DIRECTORY - STEEL SPRINKLER PIPE FOR ACCEPTABLE MANUFACTURERS, SIZES, AND JOINING METHODS.

C. ALL WET PIPE SYSTEM RISERS, FEED AND CROSS MAINS SHALL HAVE HYDRAULIC CHARACTERISTICS EQUAL TO OR GREATER THAN SCHEDULE 10 PIPE.

2.02 JOINING OF PIPE AND FITTINGS

A. ALL PIPE SHALL BE JOINED IN ACCORDANCE WITH NFPA 13 AND NFPA 24 AND MANUFACTURER'S RECOMMENDATIONS.

B. FITTINGS SHALL BE 175 PSI SCREWED OR FLANGED BLACK CAST IRON OR APPROVED EQUAL SUCH AS MECHANICAL, GROOVED, PLAIN END OR WELDED CONNECTIONS. WHERE GROOVED FITTINGS AND COUPLINGS ARE USED TOGETHER THEY SHALL BE OF THE SAME MANUFACTURER.

C. BUSHINGS SHALL NOT BE USED.

D. FLEXIBLE COUPLINGS SHALL BE IDENTIFIED ON THE SHOP DRAWINGS.

2.03 HANGERS AND SLEEVES

A. SLEEVES SHALL BE SET FOR ALL PIPES PASSING THROUGH CONCRETE FLOORS, FOUNDATIONS AND MASONRY WALLS.

B. PROVIDE PRIMED ESCUTCHEON PLATES AT ALL WALL PENETRATIONS WHERE THE HOLE WOULD OTHERWISE BE EXPOSED TO VIEW.

C. ALL HANGERS TO BE OF APPROVED MATERIALS AND SPACED IN ACCORDANCE WITH NFPA 13 AND THE PIPING MANUFACTURER'S SPECIFICATIONS.

D. THE SECTION MODULUS REQUIRED BY NFPA 13 SHALL BE PROVIDED FOR ALL TRAPEZE MEMBERS SUPPORTING PIPING.

E. SPRIGS 4 FT OR LONGER SHALL BE RESTRAINED AGAINST LATERAL MOVEMENT.

F. PROTECT PIPING AGAINST DAMAGE DUE TO EARTHQUAKE IN ACCORDANCE WITH NFPA 13, WHICH SHALL INCLUDE THE FOLLOWING:

1. FLEXIBLE COUPLINGS, MINIMUM CLEARANCES, LATERAL AND LONGITUDINAL BRACING, FOUR-WAY BRACING AND RETAINING STRAPS.
2. VERTICAL AND LATERAL RESTRAINT SHALL BE PROVIDED ON ALL BRANCH LINES, INCLUDING END OF LINE, PER NFPA 13. EXCEPTION: BRANCH LINES SUPPORTED BY RODS LESS THAN 6 IN. LONG MEASURED BETWEEN THE TOP OF THE PIPE AND THE POINT OF ATTACHMENT TO THE BUILDING STRUCTURE, AS DEFINED BY NFPA 13, REQUIRE VERTICAL RESTRAINT ONLY.
3. WIRE USED FOR RESTRAINT SHALL BE LOCATED WITHIN 24 IN. OF A HANGER. HANGER SHALL BE OF A TYPE THAT RESISTS UPWARD MOVEMENT OF THE BRANCH LINE.

2.04 VALVES

A. EXTERIOR VALVES: NONE.

B. INTERIOR VALVES:

1. CONTROL VALVE: INDICATING TYPE; 175 PSI RATED WORKING PRESSURE.
   a. ACCEPTABLE MANUFACTURERS: GRUVLOK, MILWAUKEE, MUELLER, NIBCO, STOCKHAM, TYCO, VICTAULIC, VIKING OR APPROVED EQUAL.
2. BUTTERFLY VALVE: INDICATING TYPE; 175 PSI RATED WORKING PRESSURE.
   a. ACCEPTABLE MANUFACTURERS: GRUVLOK, NIBCO, TYCO, VICTAULIC, VIKING OR APPROVED EQUAL.
3. CHECK VALVE: HORIZONTAL SWING OR WAFER; 175 PSI RATED WORKING PRESSURE.
   a. ACCEPTABLE MANUFACTURERS: GRUVLOK, MUELLER, STOCKHAM, TYCO, UNITED OR APPROVED EQUAL
4. GLOBE VALVE: BRONZE THREADED; RENEWABLE COMPOSITION DISC; 175 PSI RATED WORKING PRESSURE
   a. ACCEPTABLE MANUFACTURERS: CRANE, MILWAUKEE, NIBCO, STOCKHAM OR APPROVED EQUAL..

2.05 WATERFLOW SWITCHES

A. VANE TYPE: SHALL BE MOUNTED IN ACCORDANCE WITH ITS LISTING AND THE MANUFACTURER'S INSTRUCTIONS; DESIGNED TO SIGNAL ANY FLOW OF WATER THAT EQUALS OR EXCEEDS 10 GPM; DETECTOR SWITCH MECHANISM SHALL INCORPORATE AN INSTANTLY RECYCLING PNEUMATIC RETARD ELEMENT WITH AN ADJUSTABLE RANGE OF 0 TO 60 SECONDS; TWO SINGLE POLE, DOUBLE THROW SWITCHES SHALL BE PROVIDED SUITABLE FOR OPERATION ON 24-VOLT D.C. OR 110-VOLT A.C.; DUST TIGHT CONSTRUCTION; TAMPER RESISTANT SCREWS ON ENCLOSURE; CORROSION RESISTANT COMPONENTS WITHIN WATERWAY.

1. ACCEPTABLE MANUFACTURERS: GUARDIAN, POTTER ELECTRIC, STARFIRE, SYSTEM SENSOR OR APPROVED EQUAL.

B. THE DETECTOR SHALL BE FURNISHED AND INSTALLED BY THE FIRE SPRINKLER CONTRACTOR AND WIRED COMPLETE BY THE FIRE ALARM/ELECTRICAL CONTRACTOR.

2.06 SUPERVISORY SWITCHES

A. SWITCHES SHALL BE MOUNTED SO AS NOT TO INTERFERE WITH THE NORMAL OPERATION OF THE VALVE; ADJUST TO OPERATE WITHIN TWO REVOLUTIONS OF THE VALVE CONTROL OR WHEN THE STEM HAS MOVED NO MORE THAN ONE-FIFTH OF THE DISTANCE FROM ITS NORMAL POSITION; TWO SINGLE POLE, DOUBLE THROW SWITCHES SHALL BE PROVIDED SUITABLE FOR OPERATION ON 24-VOLT D.C. OR 110-VOLT A.C.; DUST TIGHT CONSTRUCTION; TAMPER RESISTANT SCREWS ON ENCLOSURE.

1. ACCEPTABLE MANUFACTURERS: GUARDIAN, POTTER ELECTRIC, STARFIRE, SYSTEM SENSOR OR APPROVED EQUAL.

B. THE SUPERVISORY SWITCH SHALL BE FURNISHED AND INSTALLED BY THE FIRE SPRINKLER CONTRACTOR AND WIRED COMPLETE BY THE FIRE ALARM/ELECTRICAL CONTRACTOR.

2.07 SPRINKLERS

A. TYPES:

1. BRASS UPRIGHT - GLASS BULB QUICK RESPONSE UPRIGHT SPRINKLER (PROVIDE IN EXPOSED STRUCTURE AREAS).
2. CONCEALED - QUICK RESPONSE CONCEALED SPRINKLER WITH WHITE COVERPLATE (PROVIDE IN INTERIOR FINISHED CEILING AREAS).
3. CORROSION RESISTANT WHITE RECESSED – QUICK RESPONSE WHITE RECESSED SPRINKLER (PROVIDE IN EXTERIOR CANOPIES).

B. ACCEPTABLE MANUFACTURERS: GLOBE, RELIABLE, TYCO, VICTAULIC AND VIKING.

C. ONLY SPRINKLERS MANUFACTURED AFTER JANUARY 1, 2021 WILL BE ACCEPTED FOR USE.

D. ONLY SPRINKLERS MANUFACTURED UTILIZING BELLEVILLE SPRING SEALS WILL BE ACCEPTABLE FOR USE.

E. PROVIDE A SPARE SPRINKLER CABINET AT THE RISER STOCKED WITH SPRINKLERS AND ESCUTCHEON ASSEMBLIES PROPORTIONATE TO THOSE PROVIDED IN THE BUILDING AND ALL NECESSARY SPRINKLER WRENCHES.

F. IF FLEXHEAD, OR A SIMILAR PRODUCT, IS USED, HYDRAULIC CALCULATIONS SHALL INCLUDE THE ADDITIONAL FRICTION LOSS, AND PIPE SIZES ADJUSTED IF REQUIRED AT NO ADDITIONAL COST.

2.08 SIGNS

A. APPROVED ENAMELED METAL SIGNS SHALL BE SECURELY ATTACHED AT ALL MAIN DRAINS, AUXILIARY DRAINS ALARM TEST CONNECTIONS AND CONTROL VALVES. (SIGNS SHALL INDICATE WHICH ZONE THEY SERVE.)

B. PROVIDE A PERMANENTLY ATTACHED PLACARD INDICATING HYDRAULIC DESIGN INFORMATION IN ACCORDANCE WITH NFPA 13 AND PLACED ON THE RISER. A MOCK-UP OF PLACARD(S) SHALL BE INCLUDED WITH EQUIPMENT LITERATURE.

C. PROVIDE A PERMANENTLY ATTACHED PLACARD INDICATING GENERAL INFORMATION IN ACCORDANCE WITH NFPA 13 AND PLACED ON THE RISER. A MOCK-UP OF PLACARD(S) SHALL BE INCLUDED WITH EQUIPMENT LITERATURE.

D. PROVIDE IN EACH SPRINKLER RISER ROOM A PLAN INDICATING THE AREAS SERVED BY EACH CONTROL VALVE. THE PLAN SHALL ALSO INCLUDE THE LOCATION OF EACH LOW POINT OR AUXILIARY DRAIN VALVE. THE PLAN SHALL CLEARLY IDENTIFY THE SYSTEM ASSOCIATED WITH EACH LOW POINT (AND) AUXILIARY DRAIN VALVE, AND MANUAL AIR VENT. THIS PLAN SHALL BE FRAMED WITH A PLEXIGLASS COVER AND SHALL BE PERMANENTLY ATTACHED TO A WALL. PLAN SHALL BE LARGE ENOUGH TO CLEARLY DEFINE THE AREAS PROTECTED BY EACH SYSTEM.

2.09 TEST AND DRAIN CONNECTIONS

A. PROVIDE COMBINATION ALARM TEST/MAIN DRAIN VALVE WITH PRESSURE RELIEF EQUAL TO THE AGF MANUFACTURING CO. MODEL 1011A, 2 IN. SIZE WITH ½ IN. TEST ORIFICE WHERE INDICATED ON DRAWINGS.

B. AUXILIARY DRAINS CONSISTING OF PLUGS, OR GLOBE VALVES AND PLUGS WHERE CAPACITY OF TRAPPED PIPE SECTION EXCEEDS 5 GALLONS, SHALL BE PROVIDED TO DRAIN ALL POINTS IN THE SYSTEM THAT CANNOT BE DRAINED BACK TO MAIN RISER.

2.10 ALARM TEST CONNECTION

A. PROVIDE ALARM TEST CONNECTIONS FOR THE SYSTEMS AS REQUIRED.

PART 3 - EXECUTION

3.01 COORDINATION WITH OTHER TRADES

A. COORDINATE CLOSELY WITH ALL OTHER TRADES TO EXPEDITE CONSTRUCTION AND AVOID INTERFERENCE.

3.02 EXCAVATION AND BACKFILL

A. ALL TRENCHES MUST BE DUG TO A LINE AND THE BOTTOM CLEANED AND SHAPED TO PROVIDE SUPPORT OF THE PIPE THROUGH ITS ENTIRE LENGTH.

B. MINIMUM DEPTH OF TOP TO PIPE SHALL BE IN ACCORDANCE WITH NFPA 24 AND LOCAL REQUIREMENTS.

C. BRACING SHALL BE PROVIDED AS NECESSARY TO MAINTAIN EXCAVATION.

D. AS SOON AS UNDERGROUND WORK HAS BEEN COMPLETELY INSTALLED AND TESTED, ALL EXCAVATION SHALL BE BACKFILLED IN ACCORDANCE WITH NFPA 24 AND LOCAL REQUIREMENTS.

E. REFER TO CIVIL DOCUMENTS FOR DETAILS OF CONSTRUCTION.

SECTION 15300 - FIRE SPRINKLER SYSTEMS - CONTINUED

3.03 RESTORATION OF SITE

A. WHERE SIDEWALKS, CURBS, AND LAWNS ARE EXCAVATED BY THE FIRE SPRINKLER CONTRACTOR, THESE SHALL BE REPLACED EQUAL TO THE ORIGINAL AND TO THE SATISFACTION OF THE ARCHITECT, OWNER AND LOCAL AUTHORITIES.

3.04 PAINTING AND PATCHING

A. PAINTING OF SPRINKLER PIPING IS NOT INCLUDED IN THIS CONTRACT. ALL SPRINKLER PIPING IN EXPOSED AREAS SHALL BE THOROUGHLY CLEANED, REMOVING ALL DIRT, OIL, ETC. AND MADE READY TO RECEIVE PAINT IN ACCORDANCE WITH THE GENERAL CONDITIONS OF THE CONTRACT.

B. HOLES IN WALLS OR FLOORS CUT DURING THE PERFORMANCE OF THIS WORK SHALL BE PATCHED IF THE HOLES CANNOT BE COVERED BY STANDARD ESCUTCHEON PLATES SO AS TO COMPLETELY CONCEAL THE CUTS WHERE THEY WOULD OTHERWISE BE EXPOSED TO VIEW.

C. FIRE STOP ALL PENETRATIONS OF FIRE RATED ASSEMBLIES.

3.05 SYSTEM TESTS

A. HYDROSTATICALLY TEST ALL SYSTEMS IN ACCORDANCE WITH NFPA 13 AND NFPA 24.

B. FLUSH UNDERGROUND IN ACCORDANCE WITH NFPA 13 TO ENSURE ALL FOREIGN MATTER HAS BEEN PURGED FROM UNDERGROUND PIPE.

C. TESTS SHALL BE WITNESSED BY THE AUTHORITY HAVING JURISDICTION, AND OWNER'S AUTHORIZED AGENT.

D. PRELIMINARY TESTING PROCEDURES SHALL BE CONDUCTED AS MENTIONED ABOVE TO ASSURE PROPER OPERATION WHEN THE FINAL TESTING IS PERFORMED.

E. THE CONTRACTOR'S MATERIAL AND TEST CERTIFICATES AS SHOWN IN NFPA 13 MUST BE COMPLETED AND SUBMITTED TO THE ENGINEER BEFORE FINAL ACCEPTANCE MAY BE GIVEN.

END OF SECTION

Zoning: CanningK 11/13/2024

Building&Safety: OCPWAzarvandB 12/22/2025

Permits: BNR21-0246, ELE21-0853, MEC21-0514, PLB21-0900

County of Orange - OC Public Works
OC Development Services
APPROVED

This set of plans and specifications must be kept on the job at all times. It is unlawful to make any changes or alterations to these plans without written permission from OC Public Works, OC Development Services of Orange County. The stamping of these plan specifications SHALL NOT be held to permit or be an approval of the violation of any provisions of any County Ordinance or State law.

Hadi Tabatabaee
BUILDING OFFICIAL

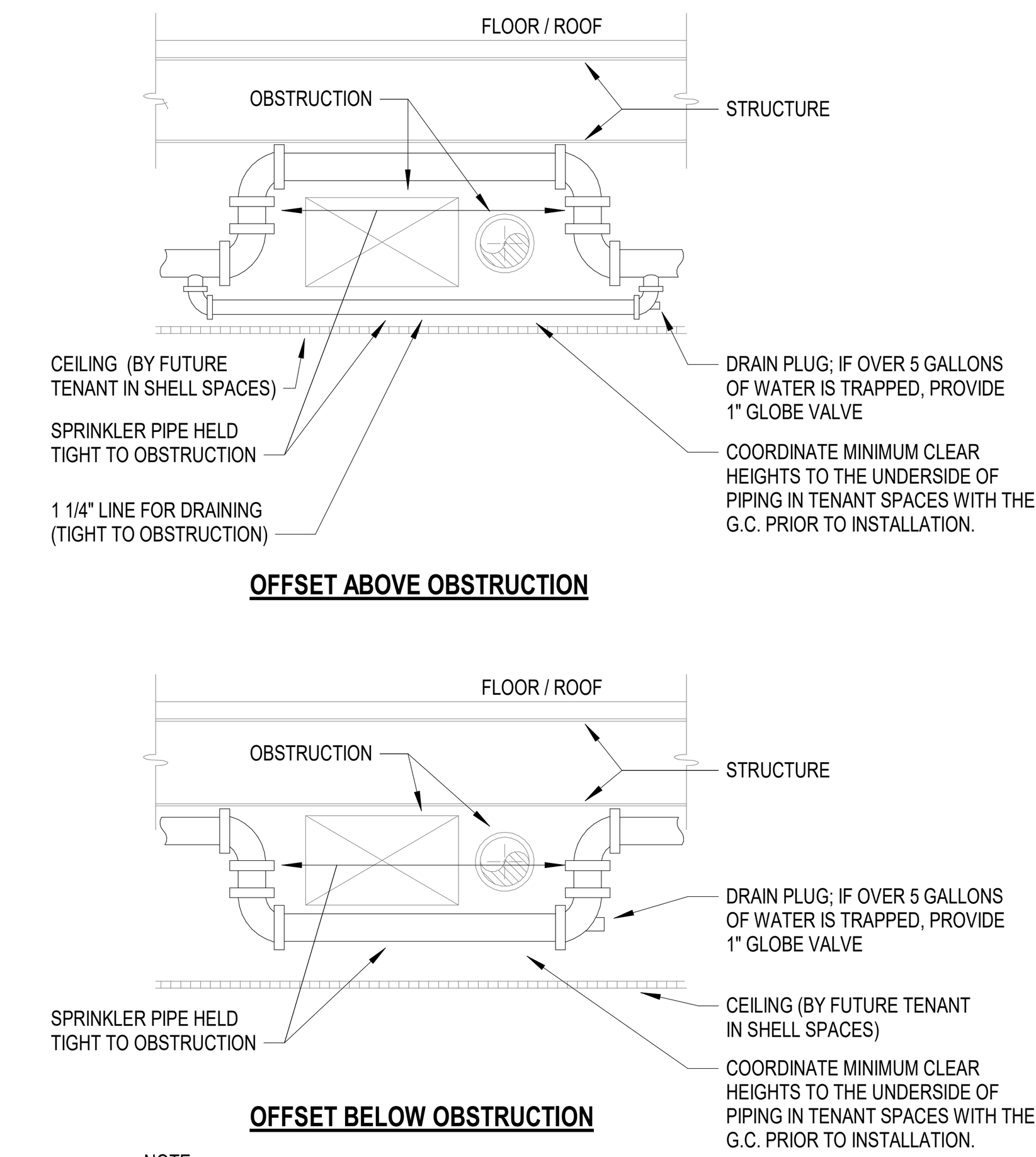

NOTE:

1. OFFSETS BELOW OBSTRUCTIONS ARE PREFERRED. OFFSETS ABOVE OBSTRUCTIONS SHOULD ONLY BE PROVIDED IF REQUIRED TO MAINTAIN HEADROOM CLEARANCE, OR WHEN THE OBSTRUCTION IS CLOSE TO THE CEILING AND THE PIPE CANNOT BE ROUTED BELOW.

TYPICAL OFFSET AT OBSTRUCTION 3 1" = 1'-0" FP0.0.1

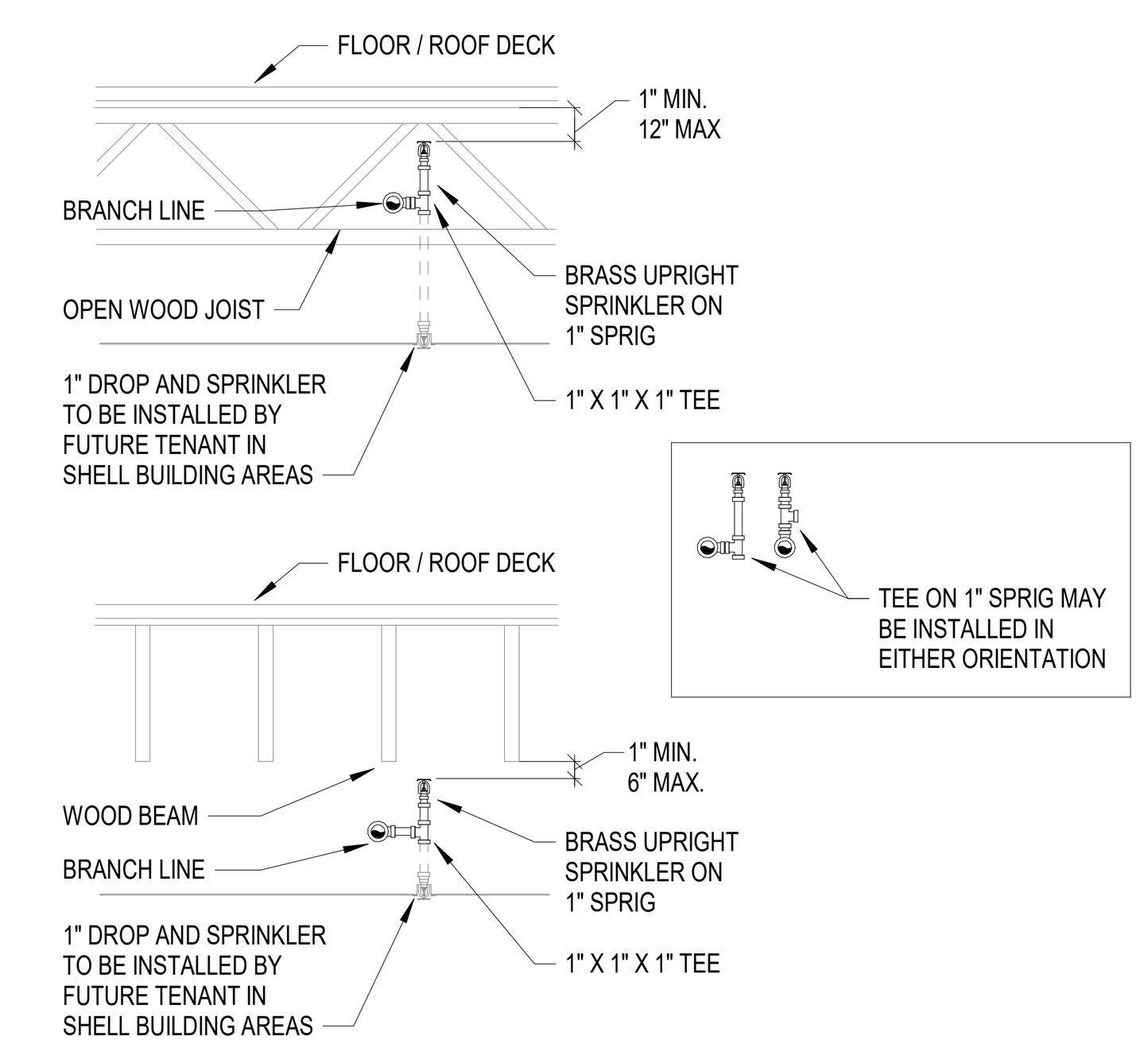

UPRIGHT SPRINKLER 1" SPRIG DETAILS 6 1" = 1'-0" FP0.0.1

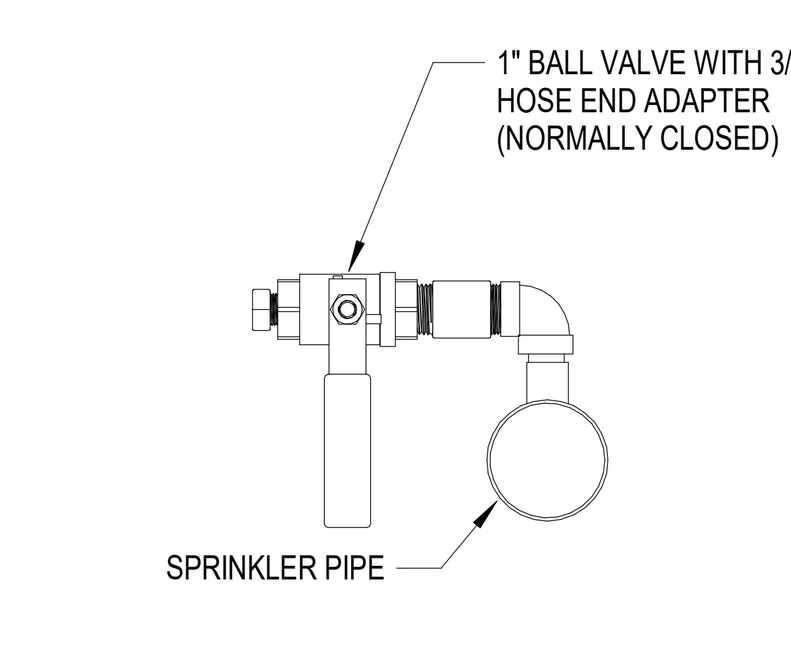

(MUST BE INSTALLED IN AN ACCESSIBLE LOCATION)

NOTE:

1. CONNECTION TO SPRINKLER PIPING AND ALL PIPING TO BALL VALVE SHALL BE LOCATED ABOVE SPRINKLER PIPING.

MANUAL AIR RELEASE
INSTALLED AT HIGH POINT OF THE SYSTEM 2 1" = 1'-0" FP0.0.1

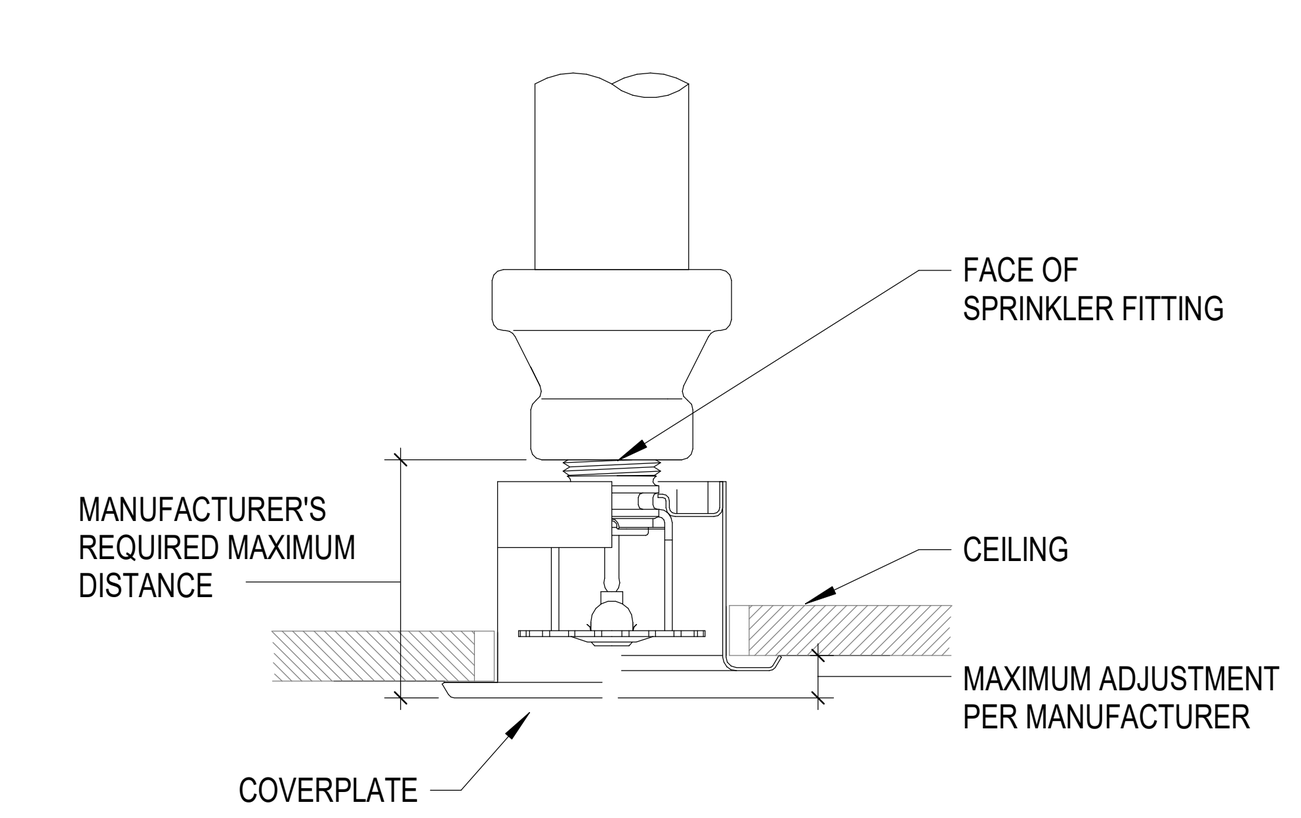

VERTICAL TOLERANCES FOR CONCEALED SPRINKLERS 5 1" = 1'-0" FP0.0.1

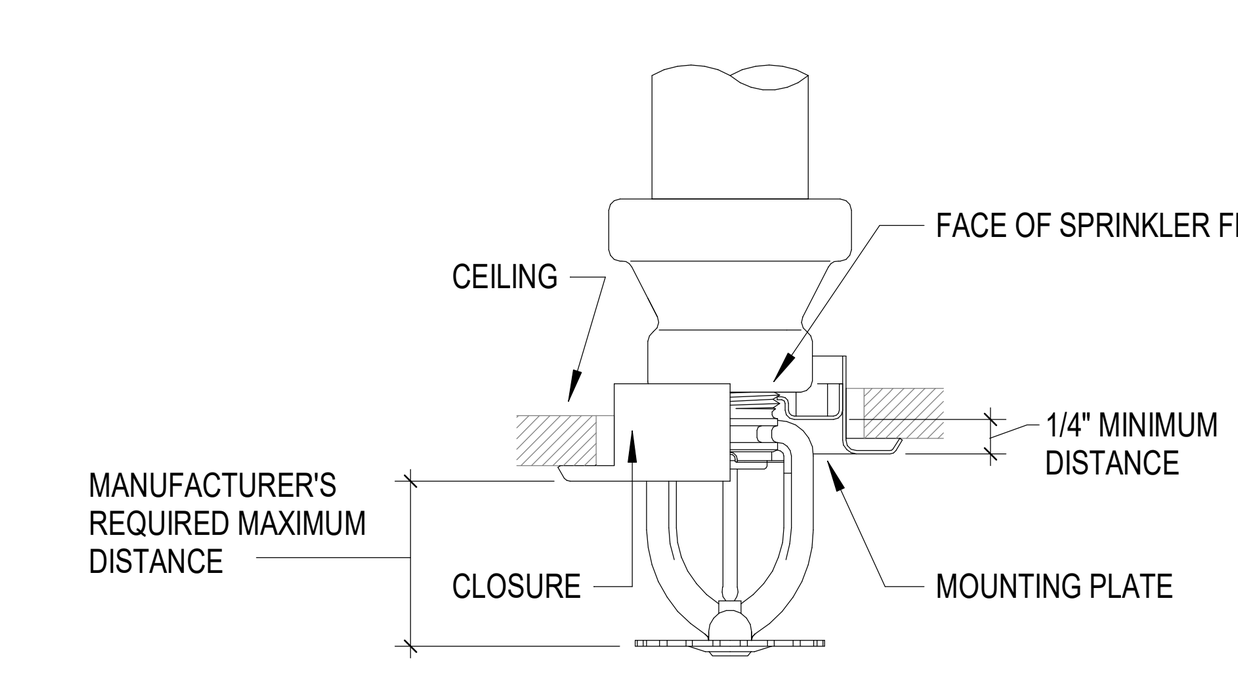

VERTICAL TOLERANCES FOR RECESSED SPRINKLERS 4 1" = 1'-0" FP0.0.1

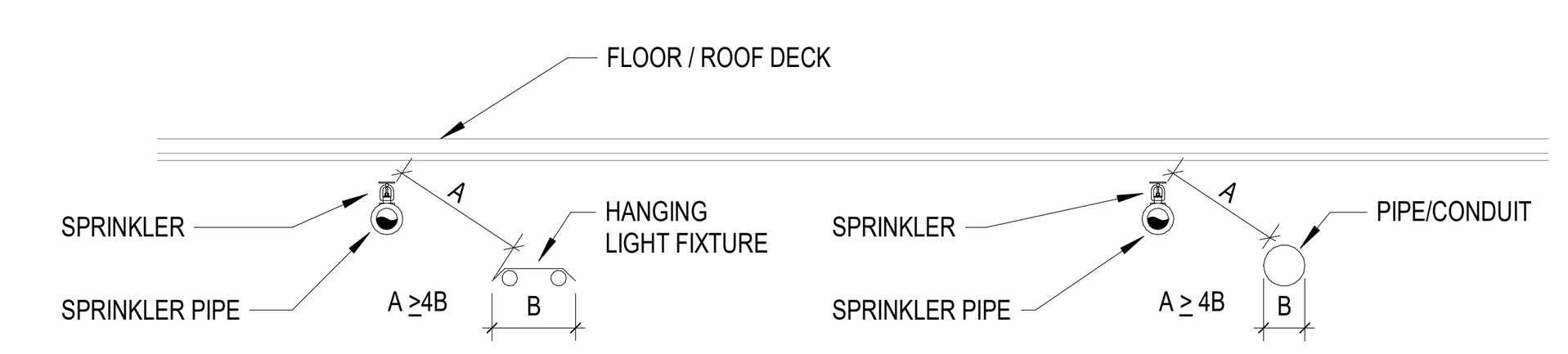

EXAMPLE; A 3" OBSTRUCTION (B) WOULD NEED TO BE 6" (3x's B) AWAY, MEASURED FROM THE LEADING EDGE OF THE OBSTRUCTION

NOTE:

1. OBSTRUCTIONS, LOCATED VERTICALLY WITHIN 18 IN. OF THE SPRINKLER, SHALL BE POSITIONED AWAY FROM THE SPRINKLER A MINIMUM DISTANCE OF THREE TIMES THE MAXIMUM DIMENSION OF THE LIGHT FIXTURES UP TO A CLEAR DISTANCE OF 24 IN.

TYPICAL OBSTRUCTION CLEARANCE REQUIREMENTS
FOR STANDARD COVERAGE FIRE SPRINKLERS 1 1" = 1'-0" FP0.0.1

FOR REFERENCE ONLY

SMSARCH
18004 Sky Park Circle, #200
Irvine, California 92614
Ph. 949.757.3240
www.sms-arch.com

CONSTANT
CCI
431 E. GRAND AVE, SUITE C
EL SEGUNDO, CA 90245
213-622-5880
www.codeconsultants.com

DANA POINT HARBOR PARTNERS

PROJECT NAME: DANA POINT HARBOR BUILDING 12
34461 GOLDEN LANTERN
DANA POINT, CA

CLIENT: B | W | P BURNHAM | WARD PROPERTIES

NOT FOR CONSTRUCTION

No.	DATE	ISSUE
	04/21/2023	COUNTY RESUBMITTAL

DRAWINGS AND WRITTEN MATERIAL APPEARING HEREIN CONSTITUTE ORIGINAL AND UNPUBLISHED WORK OF SMS ARCHITECTS AND MAY NOT BE DUPLICATED, USED OR DISCLOSED WITHOUT WRITTEN CONSENT OF THE ARCHITECT

PROJECT NO. 19019

DATE OCTOBER 8, 2020

DRAWING TITLE: FIRE SPRINKLER SPECIFICATION AND DETAILS

DRAWING NO. FP0.0.1

4/21/2023 2:29:26 PM

C:\Users\revituser\Documents\191382.06_DPH BUILDING 12_Billd@codeconsultants.com.rvt

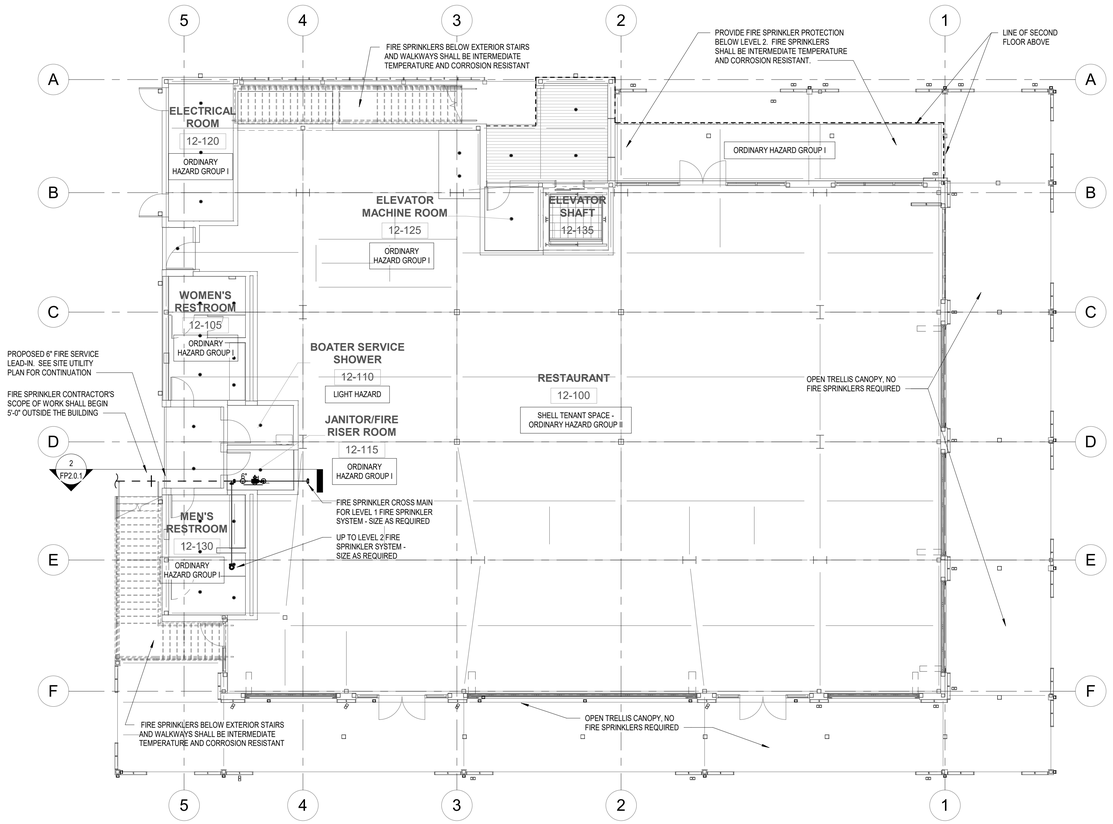

FIRE SPRINKLER LEVEL 1 PLAN 1
1/8" = 1'-0" FP2.0.1 FP2.0.1

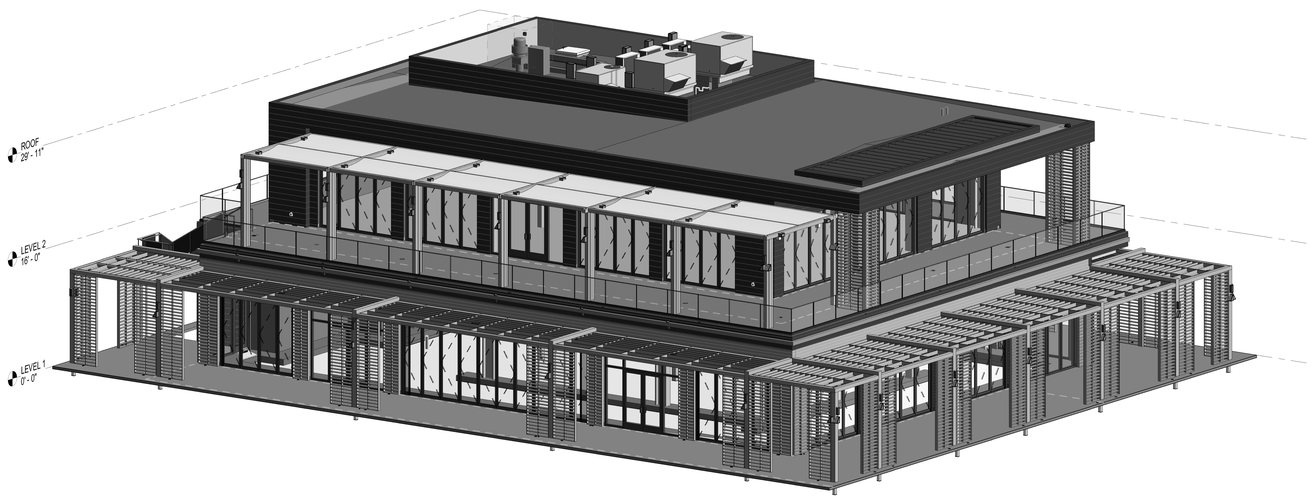

OVERALL BUILDING ISOMETRIC VIEW 3
FP2.0.1

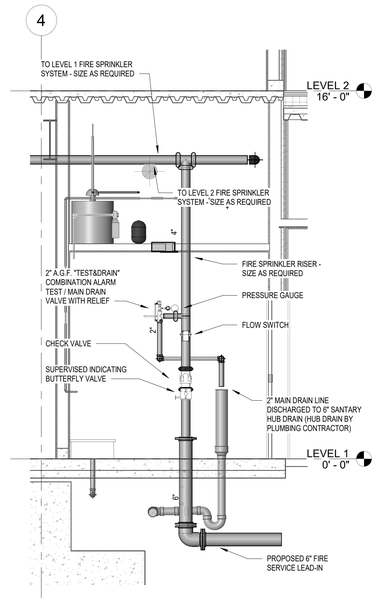

ELEVATION AT FIRE SPRINKLER RISER 2
3/8" = 1'-0" FP2.0.1 FP2.0.1

Zoning: CanningK 11/13/2024

Building&Safety: OCPWAzarvandB 12/22/2025

Permits: BNR21-0246, ELE21-0853, MEC21-0514, PLB21-0900

County of Orange - OC Public Works
OC Development Services
APPROVED
This set of plans and specifications must be kept on the job at all times. It is unlawful to make any changes or alterations to these plans without written permission from OC Public Works, OC Development Services of Orange County. The stamping of these plan specifications SHALL NOT be held to permit or be an approval of the violation of any provisions of any County Ordinance or State law.
Hind Tshetshasee
BUILDING OFFICIAL

SYMBOL KEY

- UNDERGROUD PIPING
- OVERHEAD PIPING
- RISE FROM LEFT TO RIGHT AND DROP FROM RIGHT TO LEFT
- CAPPED PIPE

SCOPE OF WORK

FIRE SPRINKLER SYSTEMS WILL BE SUPPLIED BY DEDICATED FIRE SERVICE LEAD-INS. FIRE DEPARTMENT CONNECTIONS ARE FREE-STANDING WITH A DEDICATED FIRE DEPARTMENT CONNECTION PROVIDED FOR EACH BUILDING ADJACENT TO THE EXTERIOR ABOVE GROUND BACKFLOW PREVENTER. A DEDICATED YARD PIV ADJACENT TO THE FDC WILL SERVE AS THE BUILDING CONTROL VALVE. SEE CIVIL SITE UTILITY PLANS FOR EXACT LOCATION OF FIRE SERVICE LEAD-INS, FIRE DEPARTMENT CONNECTIONS AND BACKFLOW PREVENTERS.

FIRE SPRINKLER CONTRACTOR'S WORK SHALL BEGIN APPROXIMATELY 5'-0" OUTSIDE THE BUILDING ON THE DEDICATED FIRE SERVICE LEAD-INS. FIRE DEPARTMENT CONNECTIONS, BACKFLOW PREVENTERS AND YARD POST INDICATING VALVES ARE BY OTHERS.

PROVIDE FIRE SPRINKLER PROTECTION THROUGHOUT ALL COMMON/LANDLORD AREAS, WITHIN TENANT SPACES, WITHIN COMBUSTIBLE CONCEALED SPACES INCLUDING SOFFITS AND EAVES AND BELOW EXTERIOR CANOPIES PER NFPA 13, DANA POINT AND OCFA REQUIREMENTS.

FIRE SPRINKLER SYSTEM DESIGN NOTES

1. PROVIDE FIRE SPRINKLER PROTECTION THROUGHOUT ALL COMMON/LANDLORD AREAS AND WITHIN TENANT SPACES.
2. PROVIDE FIRE SPRINKLER PROTECTION BELOW EXTERIOR CANOPIES OF COMBUSTIBLE CONTRUCTION EXCEEDING 4 FT. IN WIDTH OR ANY EXTERIOR CANOPY EXCEEDING 2 FT. IN WIDTH WHERE COMBUSTIBLES ARE STORED.
3. PROVIDE FIRE SPRINKLER PROTECTION WITHIN COMBUSTIBLE CONCEALED SPACES INCLUDING SOFFITS, EAVES AND OVERHANGS UNLESS OMISSION OF SPRINKLERS IS ALLOWED PER NFPA 13, DANA POINT AND OCFA REQUIREMENTS. FIRE SPRINKLER SPACING SHALL BE PER NFPA 13 TABLE 8.6.2.2.1(a).
4. INSTALL FIRE SPRINKLERS ON 1" SPRIGS WITH A 1" TEE FOR TO ALLOW FOR INSTALLATION OF PENDENT SPRINKLERS IN FINISHED CEILINGS TO BE INSTALLED BY THE TENANT. DO NOT INSTALL FIRE SPRINKLER ON BUSHINGS TO ALLOW TENANTS TENANTS TO MAINTAIN EXPOSED STRUCTURE FIRE SPRINKLER PROTECTION.
5. FIRE SPRINKLERS EXPOSED TO THE EXTERIOR SHALL BE INTERMEDIATE TEMPERATURE AND CORROSION RESISTANT. FIRE SPRINKLER PIPING EXPOSED TO THE EXTERIOR SHALL BE CLEANED AND PREPPED FOR PAINT.
6. COORDINATE MINIMUM CLEAR HEIGHTS TO THE UNDERSIDE OF PIPING IN TENANT SPACES WITH THE G.C. PRIOR TO INSTALLATION.
7. SPRINKLERS NEAR A HEAT SOURCE (UNIT HEATER, DIFFUSERS, SKYLIGHTS, ETC.) SHALL HAVE TEMPERATURE RATINGS IN ACCORDANCE WITH NFPA 13.
8. PROVIDE A MANUAL AIR RELEASE VALVE AT THE HIGH POINT OF EACH SYSTEM.
9. PIPING SHALL NOT BE ROUTED OVER THE TOP OF ELECTRICAL EQUIPMENT.
10. PROVIDE SPRINKLER PROTECTION BELOW DUCTS, DUCT ENCLOSURES AND ANY OTHER OBSTRUCTIONS IN EXPOSED STRUCTURE AREAS PER NFPA 13 .
11. SEISMIC DESIGN CATEGORY IS 'D'. PROVIDE SEISMIC BRACING ON ALL PIPING AS REQUIRED PER NFPA 13 AND ASCE7-16.
12. COORDINATE ALL HANGER AND SEISMIC BRACING STRUCTURAL ATTACHMENTS AND LOCATIONS WITH THE STRUCTURAL ENGINEER OF RECORD.
13. ALL PIPING WILL BE BLACK STEEL. 1"- 1 1/2" SCREWED PIPING WILL BE SCHEDULE 40. 1 1/2" - 6" ROLL GROOVE PIPING WILL BE SCHEDULE 10. THE C.R.R. VALUE OF ALL PIPING SHALL BE 1.0

GENERAL NOTES

1. PROVIDE ALL NECESSARY OFFSETS, RAISES OR DROPS IN PIPING AND AUXILIARY DRAINS REQUIRED BY BUILDING CONDITIONS WHETHER OR NOT SHOWN ON THE DRAWINGS.
2. EXAMINE THE JOB CONDITIONS AND VERIFY ALL MEASUREMENTS, DISTANCES, ELEVATIONS, CLEARANCES, PIPE SIZES, ETC. REQUIRED TO SUPPORT A DESIGN/BUILD PROPOSAL
3. ARCHITECTURAL, STRUCTURAL, MECHANICAL, AND ELECTRICAL BACKGROUND INFORMATION IS SHOWN FOR COORDINATION PURPOSES ONLY. REFER TO THE PROPER DRAWINGS FOR EXACT LOCATIONS, SIZES AND QUANTITIES OF OTHER TRADES' WORK.
4. THE ENGINEERING DRAWINGS HAVE BEEN PREPARED USING REVIT. THE DRAWINGS ARE 100% BIM. THESE DOCUMENTS WILL BE MADE AVAILABLE TO THE SUCCESSFUL FIRE SPRINKLER CONTRACTOR IN EITHER ELECTRONIC FORM OR HARD COPY.

SEE SHEET FP0.0.1 FOR FIRE SPRINKLER SPECIFICATION AND MISC. DETAILS

SMSARCHITECTS
100 Progress | Suite 250
Irvine, California 92618
949.757.3240 | www.sms-arch.com

CONSTANT

DANA POINT HARBOR PARTNERS

PROJECT NAME
DANA POINT HARBOR
BUILDING 12
34461 GOLDEN LANTERN
DANA POINT, CA

CLIENT
BWP BURNHAM|WARD PROPERTIES

NOT FOR CONSTRUCTION

No.	DATE	ISSUE
	04/21/2023	COUNTY RESUBMITTAL

DRAWINGS AND WRITTEN MATERIAL APPEARING HEREIN CONSTITUTE ORIGINAL AND UNPUBLISHED WORK OF SMS ARCHITECTS AND MAY NOT BE DUPLICATED, USED OR DISCLOSED WITHOUT WRITTEN CONSENT OF THE ARCHITECT

PROJECT NO 19019
DATE OCTOBER 8, 2020
DRAWING TITLE
BLDG 12 LEVEL 1 FIRE SPRINKLER PLAN
DRAWING NO.
FP2.0.1

FOR REFERENCE ONLY

C:\Users\trevmuse\Documents\19382-06_DPH BUILDING 12_Blrkl@sdeconsultants.com.rvt

4/21/2023 2:29:52 PM

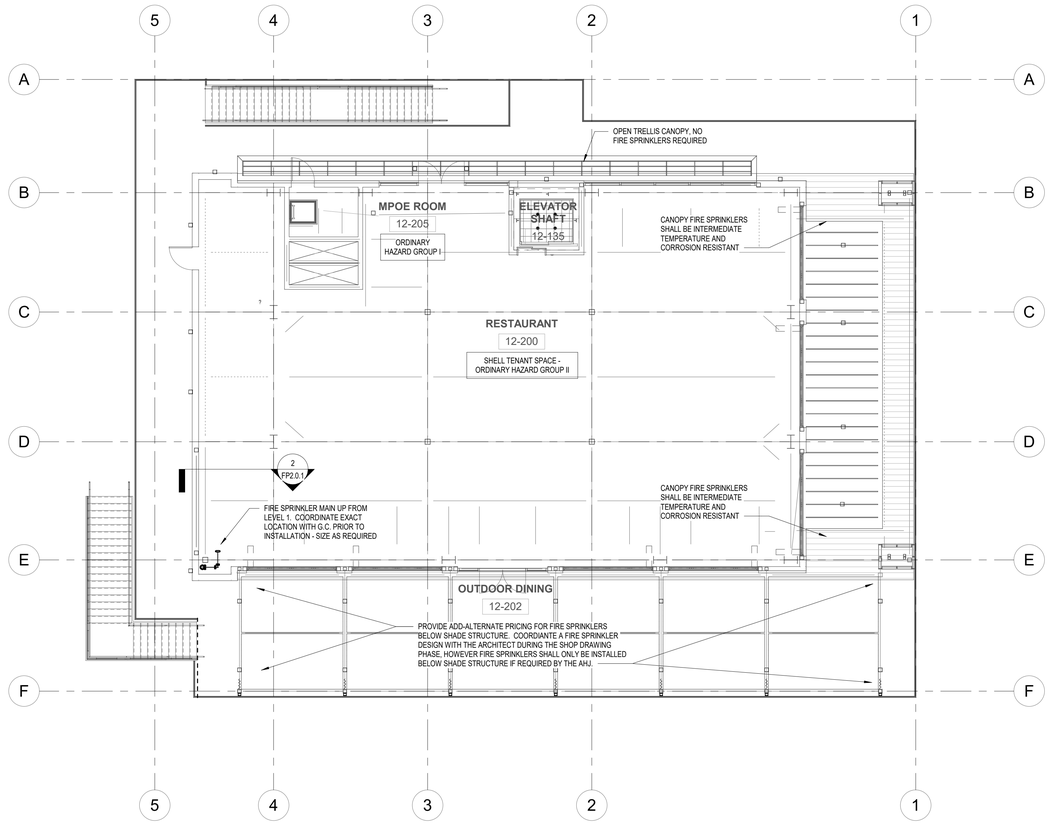

FIRE SPRINKLER LEVEL 2 PLAN 1 (FP2.0.1 | FP2.0.2)
1/8" = 1'-0"

Zoning: CanningK 11/13/2024

Building&Safety: OCPWAzarvandB 12/22/2025

Permits: BNR21-0246, ELE21-0853, MEC21-0514, PLB21-0900

County of Orange - OC Public Works
OC Development Services
APPROVED

This set of plans and specifications must be kept on the job at all times. It is unlawful to make any changes or alterations to these plans without written permission from OC Public Works, OC Development Services of Orange County. The stamping of these plan specifications SHALL NOT be held to permit or be an approval of the violation of any provisions of any County Ordinance or State law.

Hind Tshetshasen
BUILDING OFFICIAL

SYMBOL KEY

- UNDERGROUD PIPING
- OVERHEAD PIPING
- RISE FROM LEFT TO RIGHT AND DROP FROM RIGHT TO LEFT
- CAPPED PIPE

SCOPE OF WORK

FIRE SPRINKLER SYSTEMS WILL BE SUPPLIED BY DEDICATED FIRE SERVICE LEAD-INS. FIRE DEPARTMENT CONNECTIONS ARE FREE-STANDING WITH A DEDICATED FIRE DEPARTMENT CONNECTION PROVIDED FOR EACH BUILDING ADJACENT TO THE EXTERIOR ABOVE GROUND BACKFLOW PREVENTER. A DEDICATED YARD PIV ADJACENT TO THE FDC WILL SERVE AS THE BUILDING CONTROL VALVE. SEE CIVIL SITE UTILITY PLANS FOR EXACT LOCATION OF FIRE SERVICE LEAD-INS, FIRE DEPARTMENT CONNECTIONS AND BACKFLOW PREVENTERS.

FIRE SPRINKLER CONTRACTOR'S WORK SHALL BEGIN APPROXIMATELY 5'-0" OUTSIDE THE BUILDING ON THE DEDICATED FIRE SERVICE LEAD-INS. FIRE DEPARTMENT CONNECTIONS, BACKFLOW PREVENTERS AND YARD POST INDICATING VALVES ARE BY OTHERS.

PROVIDE FIRE SPRINKLER PROTECTION THROUGHOUT ALL COMMON/LANDLORD AREAS, WITHIN TENANT SPACES, WITHIN COMBUSTIBLE CONCEALED SPACES INCLUDING SOFFITS AND EAVES AND BELOW EXTERIOR CANOPIES PER NFPA 13, DANA POINT AND OCFA REQUIREMENTS.

FIRE SPRINKLER SYSTEM DESIGN NOTES

1. PROVIDE FIRE SPRINKLER PROTECTION THROUGHOUT ALL COMMON/LANDLORD AREAS AND WITHIN TENANT SPACES.
2. PROVIDE FIRE SPRINKLER PROTECTION BELOW EXTERIOR CANOPIES OF COMBUSTIBLE CONTRUCTION EXCEEDING 4 FT. IN WIDTH OR ANY EXTERIOR CANOPY EXCEEDING 2 FT. IN WIDTH WHERE COMBUSTIBLES ARE STORED.
3. PROVIDE FIRE SPRINKLER PROTECTION WITHIN COMBUSTIBLE CONCEALED SPACES INCLUDING SOFFITS, EAVES AND OVERHANGS UNLESS OMISSION OF SPRINKLERS IS ALLOWED PER NFPA 13, DANA POINT AND OCFA REQUIREMENTS. FIRE SPRINKLER SPACING SHALL BE PER NFPA 13 TABLE 8.6.2.2.1(a).
4. INSTALL FIRE SPRINKLERS ON 1" SPRIGS WITH A 1" TEE FOR TO ALLOW FOR INSTALLATION OF PENDENT SPRINKLERS IN FINISHED CEILINGS TO BE INSTALLED BY THE TENANT. DO NOT INSTALL FIRE SPRINKLER ON BUSHINGS TO ALLOW TENANTS TENANTS TO MAINTAIN EXPOSED STRUCTURE FIRE SPRINKLER PROTECTION.
5. FIRE SPRINKLERS EXPOSED TO THE EXTERIOR SHALL BE INTERMEDIATE TEMPERATURE AND CORROSION RESISTANT. FIRE SPRINKLER PIPING EXPOSED TO THE EXTERIOR SHALL BE CLEANED AND PREPPED FOR PAINT.
6. COORDINATE MINIMUM CLEAR HEIGHTS TO THE UNDERSIDE OF PIPING IN TENANT SPACES WITH THE G.C. PRIOR TO INSTALLATION.
7. SPRINKLERS NEAR A HEAT SOURCE (UNIT HEATER, DIFFUSERS, SKYLIGHTS, ETC.) SHALL HAVE TEMPERATURE RATINGS IN ACCORDANCE WITH NFPA 13.
8. PROVIDE A MANUAL AIR RELEASE VALVE AT THE HIGH POINT OF EACH SYSTEM.
9. PIPING SHALL NOT BE ROUTED OVER THE TOP OF ELECTRICAL EQUIPMENT.
10. PROVIDE SPRINKLER PROTECTION BELOW DUCTS, DUCT ENCLOSURES AND ANY OTHER OBSTRUCTIONS IN EXPOSED STRUCTURE AREAS PER NFPA 13 .
11. SEISMIC DESIGN CATEGORY IS 'D'. PROVIDE SEISMIC BRACING ON ALL PIPING AS REQUIRED PER NFPA 13 AND ASCE7-16.
12. COORDINATE ALL HANGER AND SEISMIC BRACING STRUCTURAL ATTACHMENTS AND LOCATIONS WITH THE STRUCTURAL ENGINEER OF RECORD.
13. ALL PIPING WILL BE BLACK STEEL. 1"- 1 1/2" SCREWED PIPING WILL BE SCHEDULE 40. 1 1/2" - 6" ROLL GROOVE PIPING WILL BE SCHEDULE 10. THE C.R.R. VALUE OF ALL PIPING SHALL BE 1.0

GENERAL NOTES

1. PROVIDE ALL NECESSARY OFFSETS, RAISES OR DROPS IN PIPING AND AUXILIARY DRAINS REQUIRED BY BUILDING CONDITIONS WHETHER OR NOT SHOWN ON THE DRAWINGS.
2. EXAMINE THE JOB CONDITIONS AND VERIFY ALL MEASUREMENTS, DISTANCES, ELEVATIONS, CLEARANCES, PIPE SIZES, ETC. REQUIRED TO SUPPORT A DESIGN/BUILD PROPOSAL
3. ARCHITECTURAL, STRUCTURAL, MECHANICAL, AND ELECTRICAL BACKGROUND INFORMATION IS SHOWN FOR COORDINATION PURPOSES ONLY. REFER TO THE PROPER DRAWINGS FOR EXACT LOCATIONS, SIZES AND QUANTITIES OF OTHER TRADES' WORK.
4. THE ENGINEERING DRAWINGS HAVE BEEN PREPARED USING REVIT. THE DRAWINGS ARE 100% BIM. THESE DOCUMENTS WILL BE MADE AVAILABLE TO THE SUCCESSFUL FIRE SPRINKLER CONTRACTOR IN EITHER ELECTRONIC FORM OR HARD COPY.

SEE SHEET FP0.0.1 FOR FIRE SPRINKLER SPECIFICATION AND MISC. DETAILS

FOR REFERENCE ONLY

SMSARCHITECTS
100 Progress | Suite 250
Irvine, California 92618
949.757.3240 | www.sms-arch.com

CONSTANT

DANA POINT HARBOR PARTNERS

PROJECT NAME
DANA POINT HARBOR
BUILDING 12
34461 GOLDEN LANTERN
DANA POINT, CA

CLIENT
BWP BURNHAM|WARD PROPERTIES

NOT FOR CONSTRUCTION

No.	DATE	ISSUE
	04/21/2023	COUNTY RESUBMITTAL

DRAWINGS AND WRITTEN MATERIAL APPEARING HEREIN CONSTITUTE ORIGINAL AND UNPUBLISHED WORK OF SMS ARCHITECTS AND MAY NOT BE DUPLICATED, USED OR DISCLOSED WITHOUT WRITTEN CONSENT OF THE ARCHITECT

PROJECT NO 19019
DATE OCTOBER 8, 2020
DRAWING TITLE
BLDG 12 LEVEL 2 FIRE SPRINKLER PLAN
DRAWING NO.
FP2.0.2

C:\Users\trevituser\Documents\19382.06_DPH BUILDING 12_BIM@cadvconsultants.com.rvt

4/21/2023 2:29:52 PM

Zoning: CanningK 11/13/2024

Building&Safety: OCPWAzarvandB 12/22/2025

Permits: BNR21-0246, ELE21-0853, MEC21-0514, PLB21-0900

County of Orange - OC Public Works
OC Development Services
APPROVED
This set of plans and specifications must be kept on the job at all times. It is unlawful to make any changes or alterations to these plans without written permission from OC Public Works, OC Development Services of Orange County. The stamping of these plan specifications SHALL NOT be held to permit or be an approval of the violation of any provisions of any County Ordinance or State law.
Hadi Tabatabaee
BUILDING OFFICIAL

DANA POINT HARBOR COMMERCIAL COMPONENT DEEP SOIL MIXING

DANA POINT, CALIFORNIA

SHEET INDEX

GI-1	COVER SHEET
GI-2	GENERAL NOTES AND DETAILS
GI-3	DEEP SOIL MIXING PLAN
GI-4.1	DEEP SOIL MIXING LAYOUT – BUILDING 1
GI-4.2	DEEP SOIL MIXING LAYOUT – BUILDING 6
GI-4.3	DEEP SOIL MIXING LAYOUT – BUILDING 7
GI-4.4	DEEP SOIL MIXING LAYOUT – BUILDING 8
GI-4.5	DEEP SOIL MIXING LAYOUT – BUILDING 9
GI-4.6	DEEP SOIL MIXING LAYOUT – BUILDING 10
GI-4.7	DEEP SOIL MIXING LAYOUT – BUILDING 11
GI-4.8	DEEP SOIL MIXING LAYOUT – BUILDING 12
GI-5	GEOTECHNICAL SECTIONS

GROUND IMPROVEMENT DESGINER:	ADVANCED GEOSOLUTIONS, INC.
CIVIL ENGINEER:	TAIT & ASSOCIATES, INC.
STRUCTURAL ENGINEER:	KPFF
GEOTECHNICAL ENGINEER:	GMU GEOTECHNICAL, INC.

VICINITY MAP

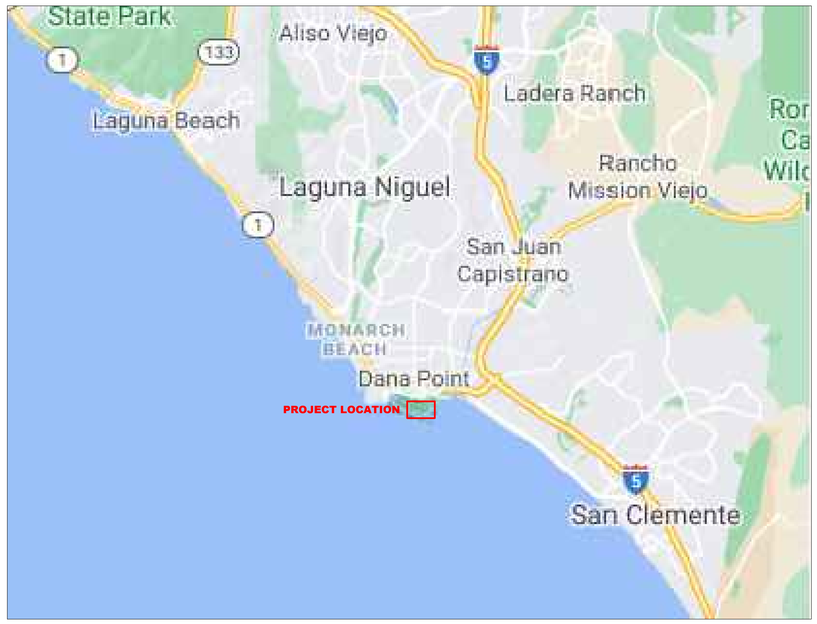

MAP DATA: GOOGLE 2020

LOCATION MAP

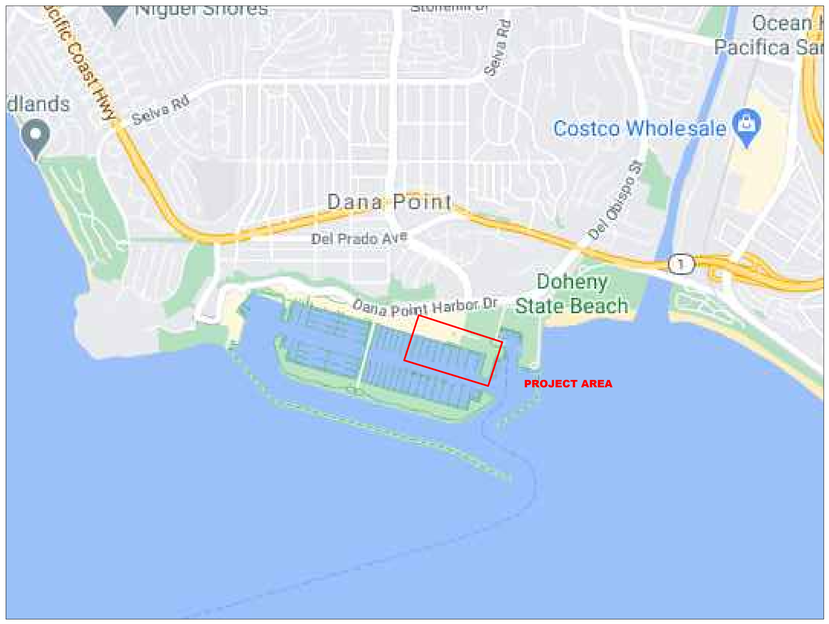

MAP DATA: GOOGLE 2020

AGI
ADVANCED GEOSOLUTIONS Inc.
13 Orchard Rd, Suite 105
Lake Forest, CA 92630
Phone (310) 796-9000 | Fax (310) 796-9001
www.advgeosolutions.com

REVISIONS

NO.	DATE	DESCRIPTION
0	08/23/21	DESIGN SUBMITTAL
A	09/29/22	FOUNDATION UPDATE BLDG 6-12
B	03/17/23	FOUNDATION UPDATE BLDG 1
C	10/25/24	FOUNDATION UPDATE BLDG 1 & 12

REGISTERED PROFESSIONAL ENGINEER THOMAS TRAN C 91763 CIVIL STATE OF CALIFORNIA

PROJECT:

GROUND IMPROVEMENT FOR

DANA POINT HARBOR COMMERCIAL COMPONENT DANA POINT, CA

SHEET TITLE:

COVER SHEET

PROJECT NO. 714290	SHEET NUMBER:
DATE: 10/25/2023	GI-1
SCALE: AS SHOWN	

S:\Projects\P714290 Dana Point Harbor Design\Drawings\Main Files\AGI_Sheet_DSM.dwg

PART 1 – GENERAL

1.1 SCOPE

A. DEEP SOILS MIXING (DSM) SHALL BE INSTALLED TO MITIGATE POTENTIAL FOR LATERAL SPREADING AND UNCERTAIN PERFORMANCE OF UNDOCUMENTED ARTIFICIAL FILL.

B. A LOAD TRANSFER PLATFORM (LTP) SHALL BE CONSTRUCTED THROUGHOUT ALL BUILDING FOOTPRINTS TO TRANSFER FLOOR SLAB LOADING TO UNDERLYING DSM COLUMNS AND PREVENT ADVERSE SETTLEMENT IN FLOOR SLAB AREAS THAT MAY RESULT FROM NEW LOADING APPLIED TO UNDERLYING UNDOCUMENTED ARTIFICIAL FILL.

C. THE DSM PLAN IS PREPARED IN ACCORDANCE WITH THE RECOMMENDATIONS OUTLINED IN THE GEOTECHNICAL REPORT PREPARED BY GMU DATED 5/27/2021.

D. THIS DESIGN IS BASED ON THE GEOTECHNICAL CHARACTERIZATION AND SOIL PARAMETERS PRESENTED IN THE REFERENCED GEOTECHNICAL REPORT, AS WELL AS LOAD REQUIREMENTS INDICATED ON THE STRUCTURAL DRAWINGS. THIS DESIGN WAS CONDUCTED IN A MANNER CONSISTENT WITH THE LEVEL OF CARE AND SKILL ORDINARILY EXERCISED BY MEMBERS OF THE GEOTECHNICAL ENGINEERING PROFESSION CURRENTLY PRACTICING UNDER SIMILAR CONDITIONS AND IN THE SAME LOCALITY. NO WARRANTY IS MADE NOR IMPLIED.

1.2 REFERENCES

A. GEOTECHNICAL INVESTIGATION REPORT, VOLUMES 1, 2, AND 3, DANA POINT HARBOR REVITALIZATION BUILDINGS 1 THROUGH 12, COMMERCIAL COMPONENT – REPORT NO. 17-206-02 PREPARED BY GMU DATED MAY 27, 2021.

B. ASTM C150 – SPECIFICATION FOR PORTLAND CEMENT

C. ASTM D1633 – STANDARD TEST METHODS FOR COMPRESSIVE STRENGTH OF MOLDED SOIL-CEMENT CYLINDERS

D. ASTM D4380 – DENSITY OF BENTONITE SLURRIES

F. FEDERAL HIGHWAY ADMINISTRATION DESIGN MANUAL: DEEP MIXING FOR EMBANKMENT, AND FOUNDATION SUPPORT, PUBLICATION NO. FHWA-HRT-13-046, OCTOBER 2013.

1.3 DEFINITIONS

A. DEEP SOIL MIXING (DSM) – A SOIL IMPROVEMENT TECHNIQUE USED TO CONSTRUCT IN SITU SOIL STRUCTURES OR TREAT SOILS IN PLACE, WITHOUT EXCAVATION OR DEWATERING. SOIL MIXING USES A LARGE, CRANE OR DRILL RIG – MOUNTED TURNTABLE TO INSERT A LARGE-DIAMETER (TYPICALLY 3- TO 8 -FOOT DIAMETER) TOOL INTO THE GROUND WHILE INJECTING AND MIXING A GROUT WITH THE SOIL. STABILIZED SOIL COLUMNS ARE CREATED THAT MAY BE JOINED TOGETHER BY OVERLAPPING TO FORM RETAINING WALLS OR FOUNDATION ELEMENTS, OR TO TREAT A LARGE BLOCK OF SOIL OR SLUDGE.

B. ASTM – ASTM INTERNATIONAL.

C. OWNER – THE OWNER AS REFERRED TO HEREIN IS DANA POINT HARBOR PARTNERS, LLC, C/O BURNHAM-WARD PROPERTIES.

D. ENGINEER – THE ENGINEER IS THE OWNER'S GEOTECHNICAL ENGINEER OF RECORD TO ACT ON ITS BEHALF IN THE EXECUTION OF THESE SPECIFICATIONS.

E. CONTRACTOR – REFERS TO THE GENERAL CONTRACTOR DIRECTLY CONTRACTED WITH THE OWNER AND SUBCONTRACTING THE DSM SCOPE TO THE DSM SUBCONTRACTOR.

F. DEEP SOIL MIXING SUBCONTRACTOR (DSM SUBCONTRACTOR) – AN INDIVIDUAL OR COMPANY WHO HAS HAD PROVEN AND SUCCESSFUL EXPERIENCE IN SOIL MIXING CONSTRUCTION.

G. GROUT – A STABLE COLLOIDAL SUSPENSION OF POWDERED CEMENT, BENTONITE, ADDITIVES AND/OR OTHER SIMILAR MATERIALS IN WATER. THE TERMS "GROUT" AND "SLURRY" ARE USED INTERCHANGEABLY IN THESE SPECIFICATIONS.

H. INJECTION RATIO – A VOLUMETRIC RATIO OF GROUT TO SOILS (E.G., 100 GALLONS/CUBIC YARD) TO BE MIXED IN A DSM COLUMN. THE GROUT INJECTION RATIO IS DETERMINED FOR EACH COLUMN BASED ON THE COLUMN DIMENSIONS, SOIL DENSITY, PATTERN OF TREATMENT, AND DESIRED APPLICATION RATE.

I. DSM COLUMN – ONE COMPLETED INSERTION, INJECTION AND MIXING OF THE SOIL WITH THE MIXING AUGER TO THE DESIGN DEPTH. THIS CREATES A COLUMN OF TREATED SOIL THE SAME DIAMETER AS THE MIXING AUGER. THE COLUMN MAY BE PRIMARY (THROUGH VIRGIN SOILS), SECONDARY (CONNECTING PRIMARY COLUMNS), TERTIARY, ETC.

J. WORKING PLATFORM – THE WORKING PLATFORM IS THE LEVELED AND STABLE SURFACE FROM WHICH THE DSM EQUIPMENT OPERATES.

K. MIXING AUGER/TOOL – THE SPECIAL TOOL THAT ATTACHES TO THE KELLY BAR AND IS INSERTED INTO THE GROUND TO MIX THE SOILS. THE TOOL MAY BE FITTED WITH PORTS FOR INJECTING GROUT, MIXING PADDLES, AUGER BLADES, ETC.

L. BLADE ROTATION NUMBER (BRN) – NUMBER OF BLADES X (RATE OF PENETRATION PLUS RATE OF WITHDRAWAL (IN REVOLUTIONS/METER). FOR EXAMPLE FOR 5 BLADES, RATE OF PENETRATION = 1 REVOLUTION/25 MM (40 REVOLUTIONS/M), AND RATE OF WITHDRAWAL = 1 REVOLUTION/20 MM (50 REVOLUTIONS/M), THE BRN = 5 X (40 + 50) = 450.

M. OBSTRUCTION – OBSTRUCTIONS ARE DEFINED AS MATERIALS CLASSIFIED AS UNDERGROUND UTILITIES, TREES (OR PARTS THEREOF), METAL, MAN-MADE OBJECTS, WOODEN/CONCRETE/STEEL OR ANY OTHER TYPE OF PILE OR DEEP FOUNDATION, OR NATURAL GROUND MATERIALS LARGER THAN A MAXIMUM COBBLE SIZE (8 INCHES MAXIMUM DIMENSION).

N. MIXING BLADE – A SINGLE MIXING BLADE SHALL CONSTITUTE A PAIR OF MIXING PADDLES ATTACHED TO THE SHAFT OF THE MIXING TOOL AT THE SAME ELEVATION. THE CUTTING PADDLES MAY ALSO BE CONSIDERED AS A MIXING BLADE.

O. DOSAGE – EXPRESSED AS THE MASS OF BINDER INTRODUCED PER VOLUME OF MIXED IN-SITU SOIL (E.G. KG/M^3).

1.4 SUBMITTALS

A. DSM WORK PLAN INCLUDING:

I. ASSIGNED NUMBER OF EACH COLUMN AS ID FOR INSTALLATION RECORD

II. NARRATIVE OF PLANNED MEANS AND METHODS TO EXECUTE THE INSTALLATION PER PLANS AND SPECIFICATIONS, INCLUDING SPECIFICATIONS OF THE GROUT BATCHING AND VERTICAL DRILL EQUIPMENT INTENDED FOR USE ON THE PROJECT.

III. NARRATIVE OF PLANNED MEANS AND METHODS TO EXECUTE THE QUALITY CONTROL REQUIREMENTS PER PLANS AND SPECIFICATIONS.

IV. PRELIMINARY SOIL MIX DESIGN INDICATING TYPE OF BINDER MATERIAL AND VOLUMETRIC PROPORTIONS FOR INITIAL TRIALS ON-SITE TO BE ADJUSTED BASED ON FIELD OBSERVATIONS AND EARLY STRENGTH RESULTS (SEE PART 3.2 TEST SECTION).

B. ACCURATE DAILY RECORDS OF THE WORK TO BE SUBMITTED BY CLOSE OF BUSINESS THE FOLLOWING DAY, INCLUDING:

I. COLUMN ID

II. DIAMETER

III. WORKING PAD ELEVATION

IV. MIXING DEPTH

V. START TIME

VI. TIME AT TIP ELEVATION

VII. FINISH TIME

VIII. MIXING DURATION

IX. GROUT MIX DETAILS (PERCENT WATER AND REAGENT BINDER)

X. GROUT INJECTION WITH DEPTH

XI. TOTAL INJECTED GROUT

XII. BLADE ROTATION NUMBER (BRN) WITH DEPTH

D. ANY PROPOSED CHANGE IN THE WORK PROCEDURES PLAN MADE NECESSARY BY CONDITIONS ENCOUNTERED DURING CONSTRUCTION FOR REVIEW AND APPROVAL BY THE ENGINEER.

E. MATERIAL CERTIFICATIONS FOR CEMENT BINDER TO BE USED IN THE PROJECT.

F. WEIGHTS: CERTIFICATES OF BATCH WEIGHTS FOR EACH TRUCK LOAD DELIVERED IF ON-SITE BATCH PLANT IS NOT USED.

G. ADMIXTURES/POZZOLANS/ADDITIVES SUBJECT TO THE APPROVAL OF THE ENGINEER, IF USED.

H. QC TEST RESULTS: SUBMIT ALL QC TEST RESULTS WITHIN 48 HOURS OF TESTING.

I. REPORT SUMMARIZING TEST SECTION RESULTS AND CALIBRATION OF DRILLING EFFORT CRITERIA FOR COLUMN DEPTH TERMINATION APPROVED BY THE ENGINEER.

J. AS-BUILT REPORT DOCUMENTING THE CONSTRUCTED LOCATIONS AND DIMENSIONS OF ALL DSM COLUMNS, COMPILATION OF ALL QUALITY CONTROL AND QUALITY ASSURANCE DATA COLLECTED FOR THE PROJECT, AND EXPLANATION OF ANY DEVIATION FROM THE PLANS AND SPECIFICATIONS PREVIOUSLY REVIEWED APPROVED TO THE SATISFACTION OF THE ENGINEER.

K. THE CONTRACTOR WILL SUBMIT A WORK PLAN DETAILING THE CONSTRUCTION AND QA/QC OF THE LTP, MEETING THE DESIGN REQUIREMENTS HEREIN AND IN THE GEOTECHNICAL REPORT.

1.5 ACCEPTANCE

A. ACCEPTANCE OF THE DSM WORK WILL BE BASED ON COMPLIANCE WITH THE STRENGTH AND GEOMETRY REQUIREMENTS OF THE PLANS AND SPECIFICATIONS AS VERIFIED BY THE ENGINEER'S QA TESTING. THE MATERIAL FORMED BY MIXING THE GROUT WITH THE IN SITU SOIL SHALL MEET A MINIMUM REQUIRED UNCONFINED COMPRESSIVE STRENGTH OF 150 POUNDS PER SQUARE INCH (PSI) AT 28 DAYS. TESTS WILL BE CONSIDERED PASSING IF THEY ARE AT LEAST 90% OF THE 150 PSI STRENGTH REQUIREMENT PROVIDED THAT NO MORE THAN 10% OF ALL TESTS FALL BELOW THE REQUIREMENT AND THE OVERALL AVERAGE STRENGTH EXCEEDS THE REQUIREMENT. IF THE UNCONFINED COMPRESSIVE STRENGTH RESULTS DO NOT MEET THAT CRITERIA, THE DSM SUBCONTRACTOR SHALL SUBMIT A MITIGATION PLAN FOR REVIEW AND APPROVAL BY THE ENGINEER.

PART 2 – PRODUCTS

2.1 MATERIALS

A. FRESH OR RECLAIMED WATER, FREE OF ANY DELETERIOUS SUBSTANCE THAT COULD ADVERSELY AFFECT THE GROUT PROPERTIES SHALL BE USED.

B. BINDER AGENT USED FOR THE PROJECT SHALL CONSIST OF PORTLAND CEMENT TYPE II/V CONFORMING TO ASTM DESIGNATION C150. THE CEMENT SHALL BE ADEQUATELY PROTECTED FROM MOISTURE AND CONTAMINATION WHILE IN TRANSIT AND STORAGE AT THE JOB SITE. RECLAIMED CEMENT OR CEMENT CONTAINING LUMPS OR DELETERIOUS MATTER SHALL NOT BE USED.

C. THE WATER AND CEMENT SHALL BE PREMIXED TO FORM A GROUT FOR INJECTION AND MIXING WITH THE IN-SITU SOIL. MATERIALS SHALL BE COMBINED IN PREDETERMINED WEIGHED PROPORTIONS WITH ITS QUALITY EVALUATED BY SPECIFIC GRAVITY MONITORED AT LEAST ONCE PER INSTALLATION BY MUD BALANCE.

D. THE DESIGN UNCONFINED COMPRESSIVE STRENGTH OF THE SOIL-CEMENT MATERIAL COMPRISING THE DSM COLUMNS IS 150 PSI AT 28 DAYS.

PART 3 – EXECUTION

3.1 EQUIPMENT

A. A PURPOSE BUILT HOLLOW STEM AND MIXING PADDLE TOOL ATTACHED TO A HIGH TORQUE ROTARY DRILL ON TRACKS SHALL BE USED TO ACCOMPLISH THE DSM. MIXING TOOLS OF 4- AND 6-FOOT-DIAMETER WILL BE IMPLEMENTED FOR THIS PROJECT. MIXING TOOLS SHALL CONSIST OF A MINIMUM OF FOUR (4) MIXING BLADES (4 PAIRS OF MIXING PADDLES).

B. CEMENT WILL BE STORED IN PURPOSE BUILT SILOS.

C. WATER SHALL BE MIXED WITH CEMENT IN A PURPOSE-BUILT WEIGH-BATCH MIXER TO PRODUCE SLURRY WITH A CONSISTENT SPECIFIC GRAVITY OR WATER:CEMENT RATIO FOR PROPER MIXING. JET VALVE MIXING OR OTHER CONTINUOUS MIXING METHODS WILL NOT BE ALLOWED.

D. GROUT SHALL BE DELIVERED TO THE MIXING RIG BY APPROPRIATELY SIZED POSITIVE DISPLACEMENT PUMPS. PROGRESSIVE CAVITY PUMPS SHALL NOT BE ALLOWED.

3.2 TEST SECTION

A. LOCATIONS: PRIOR TO INITIATING PRODUCTION WORK, DSM SUBCONTRACTOR SHALL INSTALL A MINIMUM OF TWO DSM COLUMNS WITH VARYING MIX DESIGN DOSAGE AT EACH OF THE SIX TEST SECTION LOCATIONS INDICATED ON THE PLANS.

B. EVALUATION GOALS: THE PURPOSE OF THE TEST SECTION IS TO EVALUATE THE FOLLOWING ITEMS PRIOR TO INITIATING PRODUCTION WORK. THE DSM SUBCONTRACTOR MAY PROCEED IMMEDIATELY TO PRODUCTION WHILE TEST SECTION EVALUATION RESULTS ARE PENDING BUT DOES SO AT ITS OWN RISK.

I. COLUMN DEPTH: COLUMN INSTALLATION DEPTHS FOR THE PROJECT ARE CONTROLLED BY THE DEPTH TO THE CAPISTRANO FORMATION CONTACT AS DESCRIBED IN SECTION 3.3.G. DURING TEST SECTION INSTALLATION ADJACENT TO EXISTING EXPLORATION DATA, DSM SUBCONTRACTOR SHALL MONITOR AND RECORD INDICATORS OF DRILLING EFFORT (E.G. ROTARY TORQUE APPLIED AND CROWD PRESSURE). DSM SUBCONTRACTOR SHALL PROPOSE A READILY IDENTIFIABLE METRIC SUBJECT TO THE ENGINEER'S APPROVAL FOR THE DRILL OPERATOR TO OBSERVE DURING INSTALLATION AS EVIDENCE OF ENCOUNTERING THE CAPISTRANO FORMATION.

II. MIX CONSISTENCY: DURING TEST SECTION MIXING THE DSM SUBCONTRACTOR AND ENGINEER SHALL OBSERVE

III. STRENGTH: A MINIMUM OF TWO WET-GRAB SAMPLES SHALL BE COLLECTED FROM EACH TEST SECTION COLUMN INSTALLED AT DEPTHS OF 1/3 AND 2/3 THE TOTAL INSTALLATION DEPTH. EACH SAMPLE COLLECTED SHALL BE CAST INTO CYLINDERS FOR UNCONFINED COMPRESSION STRENGTH TESTING AND EVALUATION AS DESCRIBED IN SECTION 3.4.B.

IV. LOAD TEST: DSM SUBCONTRACTOR SHALL CONDUCT A MINIMUM OF FOUR LOAD TESTS PER THE REQUIREMENTS OF THIS SPECIFICATION TO ASSESS THE 4-FOOT-DIAMETER DSM COLUMN GEOTECHNICAL CAPACITY ADJACENT TO EXPLORATORY TEST DATA. SEE PROPOSED LOAD TEST LOCATIONS ON SHEET GI-3.

3.3 CONSTRUCTION

A. INSTALL DSM COLUMNS AT THE LOCATIONS AND TO THE DEPTH INDICATED ON THE DSM PLAN.

B. HORIZONTAL ALIGNMENT: THE DSM COLUMNS SHALL BE CAREFULLY SURVEYED AND STAKED OUT PRIOR TO INSTALLATION. THE COLUMNS SHALL BE CONSTRUCTED WITHIN 4 INCHES OF THE LOCATIONS SHOWN ON THE DRAWINGS.

C. VERTICAL ALIGNMENT: VERTICAL ALIGNMENT OF THE AUGER STROKE WILL BE CONTROLLED BY THE EQUIPMENT OPERATOR. THE COLUMN VERTICALITY SHALL HAVE A TOLERANCE OF 1:50 MAXIMUM DEVIATION.

D. MIXING SHAFT SPEED: THE MIXING SHAFT SPEED (RPMS) SHALL BE ADJUSTED TO ACCOMMODATE AN ADEQUATE RATE OF MIXING SHAFT PENETRATION BASED ON THE DEGREE OF DRILLING DIFFICULTY. THE MIXING SHAFT SPEED CAN BE ADJUSTED ACCORDING TO DRILLING DIFFICULTY.

E. BOTTOM MIXING: THE BOTTOM OF THE COLUMNS SHALL BE DOUBLE MIXED BY RAISING THE MIXING SHAFTS FIVE FEET OFF THE BOTTOM AND THEN REINSERTING THEM FOR REMIXING.

F. GROUT TAKE: THE GROUT TAKE (OR INJECTION RATE) PER VERTICAL FOOT OF COLUMN WILL BE ADJUSTED TO THE REQUIREMENTS OF THE DESIGN MIX. APPROPRIATE DELIVERY PUMPS SHALL BE USED TO TRANSFER THE GROUT FROM THE MIX PLANT TO THE DSM RIG. A FLOW MONITORING DEVICE WILL BE INSTALLED IN THE GROUT LINE TO DETECT LINE BLOCKAGE AND ELECTRONICALLY RECORD INJECTION RATES AND VOLUMES VERSUS DEPTH AND TIME FOR QUALITY CONTROL MONITORING.

I. THE RATE OF APPLICATION MAY BE CONTROLLED AND MONITORED BY ADJUSTING THE PUMP OUTPUT TO THE PENETRATION RATE SO THAT A PRESET GROUT TAKE CAN BE ACHIEVED. TYPICALLY, THE APPLICATION RATE CAN BE SUCCESSFULLY CONTROLLED BY EXPERIENCED OPERATORS ONCE THE PATTERN OF OPERATION IS ESTABLISHED.

II. SOME VARIATIONS OF THE GROUT TAKE WILL OCCUR DUE TO FIELD CONDITIONS. HOWEVER, THE OVERALL APPLICATION RATE TO EACH STROKE CAN BE MONITORED, CALCULATED AND CONTROLLED. ADDITIONAL MIXING IS TO BE USED WHEN NECESSARY TO DISTRIBUTE THE GROUT THROUGH THE ENTIRE COLUMN. THE INJECTION OF GROUT TO EACH STROKE WILL BE MONITORED, CHECKED BY CALCULATION AND RECORDED.

G. COLUMN DEPTH:

I. BUTTRESS COLUMNS: COLUMNS INSTALLED FOR THE LATERAL SPREAD BUTTRESS SHALL BE INSTALLED TO A MINIMUM OF 4 FEET BEYOND THE CAPISTRANO FORMATION CONTACT AS IDENTIFIED BASED ON THE DRILLING EFFORT CALIBRATION PERFORMED DURING THE TEST SECTION WORK AND SUBJECT TO THE APPROVAL OF THE ENGINEER. PRACTICAL REFUSAL (AS DEFINED IN SECTION 3.3.H) ENCOUNTERED PRIOR TO ACHIEVING THE REQUIRED 4-FOOT EMBEDMENT INTO CAPISTRANO FORMATION MAY BE APPROVED BY THE ENGINEER ON A CASE-BY-CASE BASIS BUT THE DSM SUBCONTRACTOR SHALL BE PREPARED TO INITIATE PREDRILLING IF NEEDED TO ACHIEVE THE REQUIRED EMBEDMENT AT NO ADDITIONAL COST TO THE OWNER.

II. BUILDING SUPPORT COLUMNS: DSM COLUMNS INTENDED FOR SUPPORT OF THE RETAIL BUILDINGS SHALL BE INSTALLED TO A MINIMUM OF 1 FOOT BEYOND THE CAPISTRANO FORMATION CONTACT OR TO PRACTICAL REFUSAL. MEANS OF IDENTIFYING THE CAPISTRANO FORMATION CONTACT WILL BE BASED ON THE DRILLING EFFORT CALIBRATION PERFORMED DURING THE TEST SECTION WORK AND SUBJECT TO THE APPROVAL OF THE ENGINEER.

H. OBSTRUCTION/MIXING SHAFT PRACTICAL REFUSAL: IF OBSTRUCTIONS ARE ENCOUNTERED WHICH REDUCE THE RATE OF PENETRATION TO ONE FOOT PER MINUTE FOR TWO MINUTES UNDER FULL POWER, THE STROKE SHALL BE COMPLETED IN ACCORDANCE WITH THE SPECIFICATIONS AND REMEDIAL MEASURES WILL BE TAKEN. SUBCONTRACTOR SHALL NOTIFY CONTRACTOR TO INVESTIGATE, CONFIRM, AND REMOVE SAID OBSTRUCTIONS FROM THE SOIL MIXING AREA. ONCE CONTRACTOR REMOVES OBSTRUCTIONS AND BACKFILLS AND COMPACTS (IN LIFTS NOT TO EXCEED 3 FEET IN UNCOMPACTED THICKNESS) THE REMOVAL AREA WITH GRANULAR SAND OR SANDY GRAVEL MATERIAL, THE DSM SUBCONTRACTOR SHALL RETURN TO MIXING THE BACKFILLED AREAS AND REMAINING DSM COLUMNS PER PLANS AND SPECS. IF REMOVAL OF OBSTRUCTIONS BY CONTRACTOR DAMAGES A PREVIOUSLY INSTALLED DSM COLUMN, ASSOCIATED RE-INSTALLATION WORK SHALL BE COMPENSATED BY AS EXTRA AT THE CONTRACT UNIT PRICES. IF IT IS INFEASIBLE OR IMPRACTICAL TO CLEAR AN OBSTRUCTION FROM A DESIGN INSTALLATION LOCATION, CONTRACTOR MAY PROPOSE A MODIFICATION TO THE DESIGN PROVIDED THE ORIGINAL PERFORMANCE IS MAINTAINED SUBJECT TO THE REVIEW AND APPROVAL OF THE ENGINEER.

I. MIXING ENERGY: THE DSM SUBCONTRACTOR SHALL MIX EACH COLUMN WITH SUFFICIENT MIXING ENERGY THROUGHOUT TO PROPERLY PROCESS THE SOIL CEMENT PRODUCT. THE MIXING ENERGY SHALL BE DEMONSTRATED BY MEASURED AND RECORDED BRN REPORTED FOR EACH INSTALLATION AND THE MIXING ENERGY APPLIED SHALL MINIMALLY ACHIEVE THAT REQUIRED TO PRODUCE SATISFACTORY RESULTS DURING THE TEST SECTION.

J. NO EXCAVATION OR HEAVY GRADING BY CONTRACTOR SHALL PROCEED PRIOR TO 3 DAYS AFTER DSM COLUMN CONSTRUCTION UNLESS APPROVED BY THE DSM DESIGN ENGINEER.

K. UTILITY TRENCH: EXCAVATE THE COMPLETED DSM COLUMNS AS NECESSARY FOR UNDERGROUND UTILITIES. TRENCH BACKFILL WILL BE AS FOLLOW:

I. FOR TRENCHES CUT INTO BUTTRESS DSM AND ABOVE GWT: BACKFILL WILL NATIVE SOILS OR AS APPROVED BY THE ENGINEER.

II. FOR TRENCHES CUT INTO BUTTRESS DSM AND EXTEND BELOW GWT: BACKFILL WITH CEMENT SLURRY WITH COMPRESSIVE STRENGTH OF AT LEAST 300 PSI.

III. UTILITIES TRENCHES WILL AVOID CUTTING INTO THE DISCRETE 4' DIAMETER DSM COLUMNS SUPPORTING BUILDINGS AND SLABS.

L. MANAGEMENT OF SPOIL TO BE COORDINATED BETWEEN CONTRACTOR AND DSM SUBCONTRACTOR.

Zoning: CanningK 11/13/2024
Building&Safety: OCPWAzarvandB 12/22/2025
Permits: BNR21-0246, ELE21-0853, MEC21-0514, PLB21-0903
County of Orange - OC Public Works
OC Development Services
APPROVED
This set of plans and specifications must be kept on the job at all times. It is unlawful to make any changes or alterations to these plans without written permission from OC Public Works, OC Development Services of Orange County. The stamping of these plan specifications SHALL NOT be held to permit or be an approval of the violation of any provisions of any County Ordinance or State law.
Hadi Tabatabaee
BUILDING OFFICIAL

3.4 QUALITY CONTROL AND QUALITY ASSURANCE

A. PRIOR TO CONSTRUCTION, A PRELIMINARY MIX DESIGN SHALL BE GENERATED BY THE SUBCONTRACTOR. THE MIX DESIGN MAY BE OBTAINED BASED ON SITE SOILS AND LABORATORY TESTING, OR ALTERNATIVELY, BASED ON THE SUBCONTRACTORS DATABASE IN SIMILAR SOIL CONDITIONS AND STRENGTH REQUIREMENTS.

B. WET SAMPLING: THE DSM SUBCONTRACTOR SHALL OBTAIN WET BULK SAMPLES OF THE SOIL CEMENT MIX AND CAST IT IN CYLINDERS FOR SUBSEQUENT QUALITY CONTROL TESTING BY THE DSM SUBCONTRACTOR, AND QUALITY ASSURANCE TESTING AND ACCEPTANCE BY THE ENGINEER.

I. ONE SAMPLE WILL BE RETRIEVED PER WORK DAY PER RIG.

II. THE VOLUME OF SAMPLE RECOVERED DURING EACH SAMPLING SHALL BE SUFFICIENT TO CAST 6 SAMPLE CYLINDERS EACH MEASURING 3" DIAMETER BY 6" HIGH. A ½" SIEVE WILL BE USED TO SCREEN THE MATERIAL IN ORDER TO FACILITATE APPROPRIATE SCALING OF INCLUSIONS AND PROPER MODELING OF THE 3 INCH CYLINDERS.

III. OF THE 6 CYLINDERS CAST, 3 WILL BE PROVIDED TO THE ENGINEER FOR QUALITY ASSURANCE TESTING AND 3 WILL BE RETAINED BY THE DSM SUBCONTRACTOR FOR QUALITY CONTROL TESTING.

IV. TO AVOID DISTURBANCE, THE CYLINDERS ARE TO BE CURED ON SITE IN A COOLER WITH A SMALL AMOUNT OF WATER TO MAINTAIN A STABLE, COOL AND MOIST CURING ENVIRONMENT FOR 2 DAYS.

V. AFTER QUALITY ASSURANCE SAMPLES ARE RETRIEVED BY THE ENGINEER, ALL WET GRAB SAMPLES SHALL BE STORED IN A MOIST ROOM (NOT SUBMERGED) IN ACCORDANCE WITH ASTM C 192 UNTIL THE TEST DATE.

VI. THE QUALITY CONTROL SAMPLES WILL BE TESTED (BY THE DSM SUBCONTRACTOR) FOR UCS IN ACCORDANCE WITH ASTM D1633, AT 3-DAY, 7-DAY, AND 14-DAY AFTER CASTING. THE RESULTS WILL BE USED TO EXTRAPOLATE THE EXPECTED STRENGTH AT 28-DAYS.

VII. THE QUALITY ASSURANCE SAMPLES WILL BE TESTED (BY THE ENGINEER) FOR UCS IN ACCORDANCE WITH ASTM D1633, AT 7-DAY, 14-DAY, AND 28-DAY AFTER CASTING.

VII. WHEN TIME OR SCHEDULE DOES NOT PERMIT A 28-DAY CURING STRENGTH EVALUATION, THE FOLLOWING UCS AGING CORRELATION WILL BE TENTATIVELY APPLIED TO THIS JOB:

28 : 7 DAY, 1.57

VIII. THE ABOVE CORRELATION MAY BE ADJUSTED FOR SITE-SPECIFIC FINDINGS AS THE PROJECT DEVELOPS.

IX. THE DESIGN STRENGTH FOR THIS PROJECT AT 28-DAYS IS 150 PSI. SUBJECT TO THE APPROVAL OF THE ENGINEER, 7-DAY TEST RESULTS MAY BE ACCEPTED BASED ON THE CORRELATION ABOVE OR A REVISED CURING FACTOR BASED ON PROJECT-SPECIFIC STATISTICAL ANALYSIS OF AVAILABLE DATA.

C. LOAD TEST:

I. DSM SUBCONTRACTOR SHALL PERFORM A MINIMUM OF FOUR COMPRESSION LOAD TEST ON 4-FOOT-DIAMETER COLUMNS AT THE TEST SECTION LOCATION SPECIFIED FOR THE BUILDINGS ON THE DRAWINGS.

II. COMPRESSION LOAD TEST SHALL BE IN GENERAL ACCORDANCE WITH ASTM D1143. THE TEST COLUMN SHALL BE CONDUCTED TO AT LEAST 150% OF THE STATIC DESIGN LOAD.

III. LOAD TEST WILL NOT BE PERFORMED BEFORE THE COLUMN HAS ACHIEVED SUFFICIENT UNCONFINED COMPRESSIVE STRENGTH AS DEMONSTRATED BY LABORATORY TESTING ON WET GRAB SAMPLES.

D. OBSERVATION: A REPRESENTATIVE OF THE ENGINEER SHALL BE PRESENT FULL-TIME DURING ALL INSTALLATION WORK TO OBSERVE THE CONSTRUCTION OF THE DSM COLUMNS, SAMPLING, AND TESTING TO VERIFY THE DSM SUBCONTRACTOR PERFORMS THE WORK IN SUBSTANTIAL CONFORMANCE WITH THESE SPECIFICATIONS. THE ENGINEER SHALL MAINTAIN PARALLEL HAND RECORDS OF PERTINENT INSTALLATION DATA FOR COMPARISON WITH REPORTED INSTALLATION LOGS AND OBTAIN TEST SPECIMENS OF THE WET-SAMPLES COLLECTED FOR QUALITY ASSURANCE TESTING.

E. UPON COMPLETION OF SITE GRADING AND DSM/LTP INSTALLATION, WRITTEN CONFIRMATION FROM THE PROJECT GEOTECHNICAL CONSULTANT OF RECORD WILL BE PROVIDED TO CONFIRM PRELIMINARY RECOMMENDATIONS FOR PROPOSED STRUCTURE(S) ALLOWABLE BEARING VALUE REMAINS VALID. ADDITIONAL RECOMMENDATIONS SHALL BE PROVIDED AS NECESSARY.

END OF SECTION

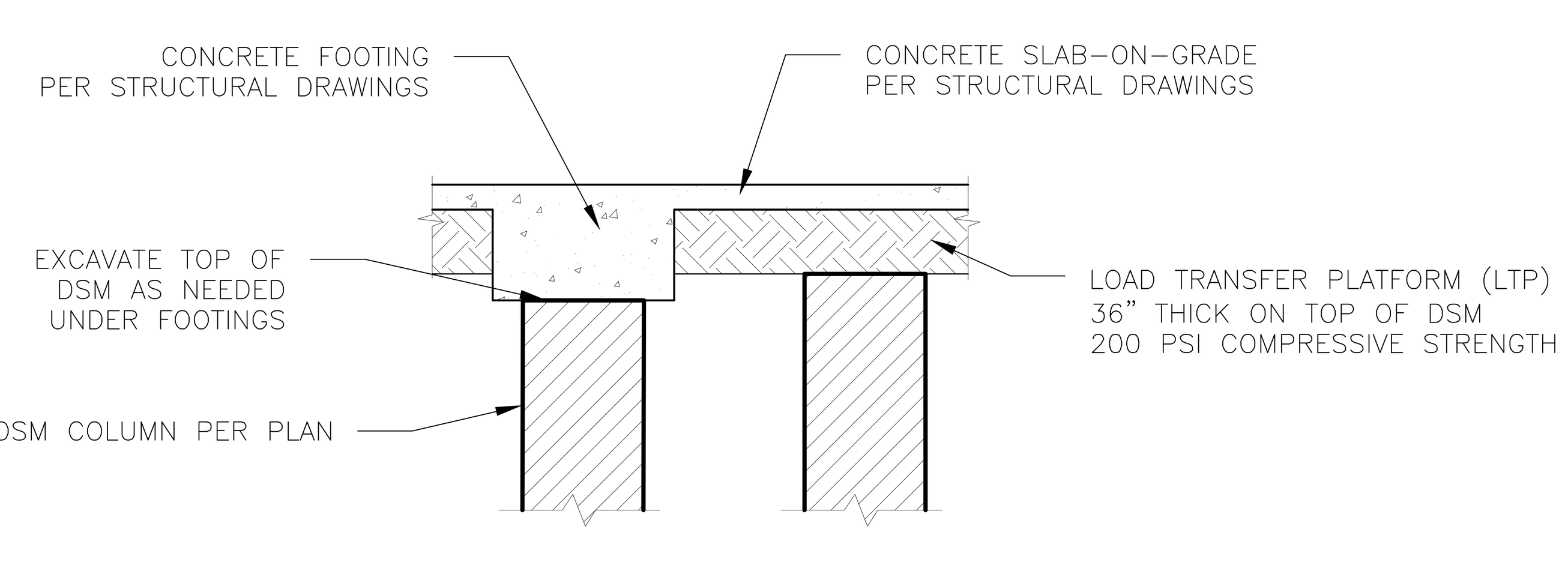

TYPICAL BUILDING SUPPORT DETAIL
SCALE: NTS

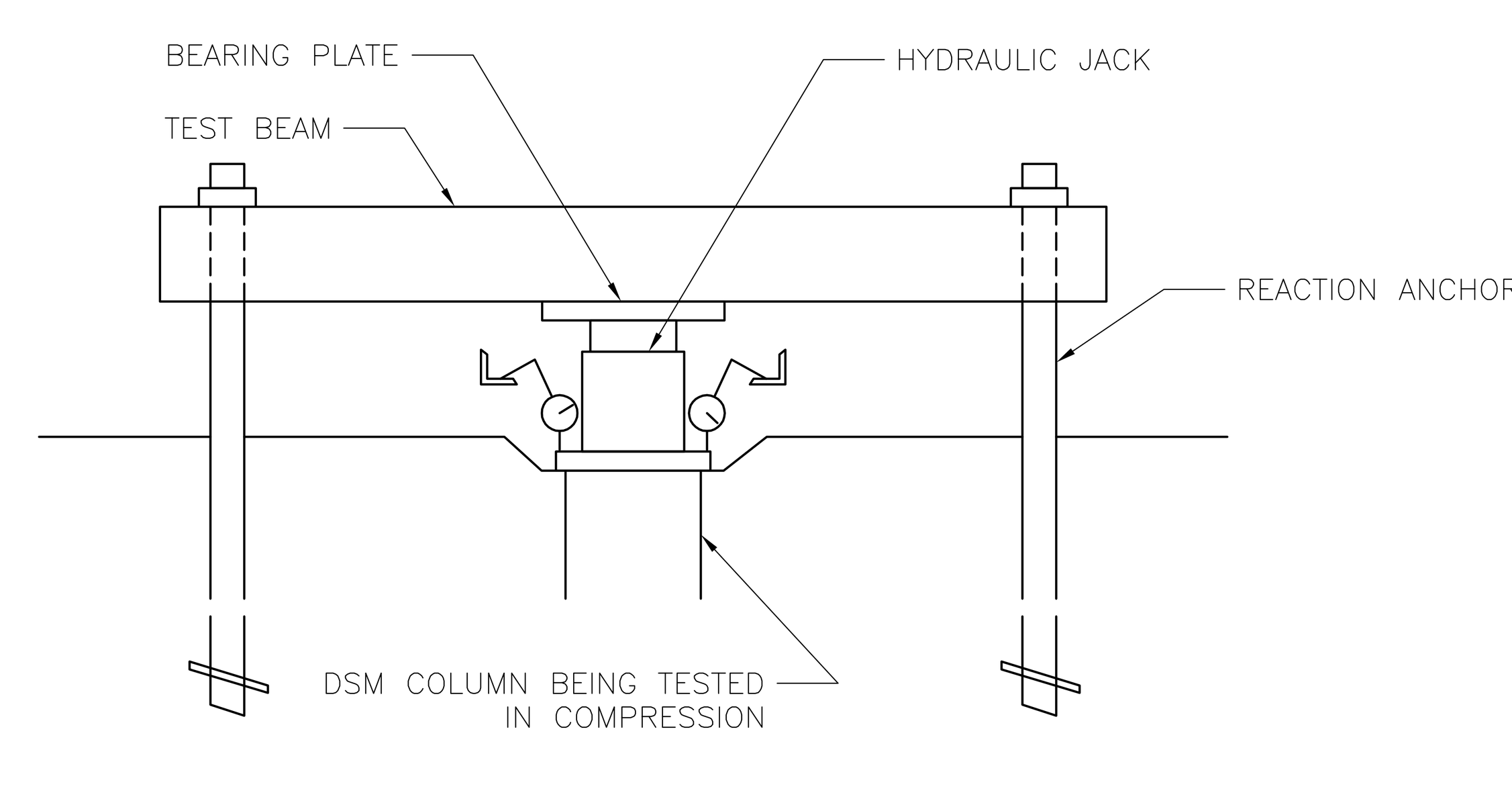

LOAD TEST SETUP
SCALE: NTS

COMPRESSION TEST LOADING SCHEDULE		
DESIGN LOAD =	200	KIPS
PERCENT OF DL	LOAD VALUE	HOLD DURATION
(%)	(KIP)	(MIN)
5%	10	4
10%	20	4
15%	30	4
20%	40	4
25%	50	4
30%	60	4
35%	70	4
40%	80	4
45%	90	4
50%	100	4
55%	110	4
60%	120	4
65%	130	4
70%	140	4
75%	150	4
80%	160	4
85%	170	4
90%	180	4
95%	190	4
100%	200	4
105%	210	4
110%	220	4
115%	230	4
120%	240	4
125%	250	4
130%	260	4
135%	270	4
140%	280	4
145%	290	4
150%	300	4
125%	250	4
100%	200	4
75%	150	4
50%	100	4
25%	50	4
5%	10	4
0%	0	-

AGI
ADVANCED GEOSOLUTIONS Inc.
13 Orchard Rd, Suite 105
Lake Forest, CA 92630
Phone (310) 796-9000 | Fax (310) 796-9001
www.advgeosolutions.com

REVISIONS		
NO.	DATE	DESCRIPTION
–	–	–

REGISTERED PROFESSIONAL ENGINEER
THOMAS TRAN
C 91763
CIVIL
STATE OF CALIFORNIA
Thomas Tran

PROJECT:
GROUND IMPROVEMENT FOR
DANA POINT HARBOR
COMMERCIAL COMPONENT
DANA POINT, CA

SHEET TITLE:
GENERAL NOTES AND DETAILS

PROJECT NO. –
SHEET NUMBER: GI-2
DATE: 08/23/2021
SCALE: AS SHOWN

S:\Projects\P714290 Dana Point Harbor Design\Drawings\Main Files\AGI_Sheet_DSM.dwg

Zoning: CanningK 11/13/2024

Building&Safety: OCPWAzarvandB 12/22/2025

Permits: BNR21-0246, ELE21-0853, MEC21-0514, PLB21-0900

County of Orange - OC Public Works
OC Development Services
APPROVED

This set of plans and specifications must be kept on the job at all times. It is unlawful to make any changes or alterations to these plans without written permission from OC Public Works, OC Development Services of Orange County. The stamping of these plan specifications SHALL NOT be held to permit or be an approval of the violation of any provisions of any County Ordinance or State law.

Hind Tahtehsani
BUILDING OFFICIAL

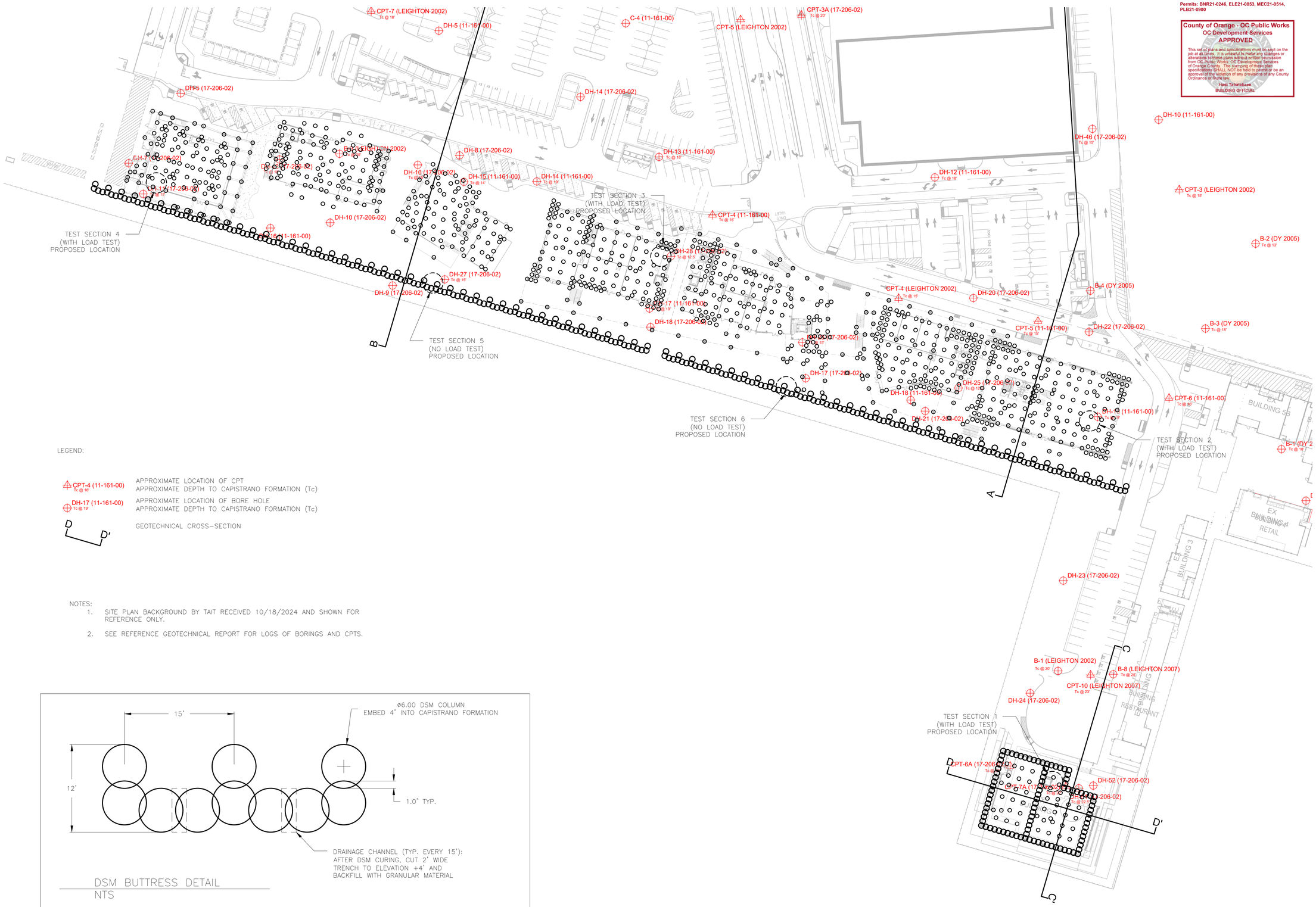

LEGEND:

CPT-4 (11-161-00) Tc @ 16' — APPROXIMATE LOCATION OF CPT
APPROXIMATE DEPTH TO CAPISTRANO FORMATION (Tc)

DH-17 (11-161-00) Tc @ 19' — APPROXIMATE LOCATION OF BORE HOLE
APPROXIMATE DEPTH TO CAPISTRANO FORMATION (Tc)

D D' — GEOTECHNICAL CROSS-SECTION

NOTES:
1. SITE PLAN BACKGROUND BY TAIT RECEIVED 10/18/2024 AND SHOWN FOR REFERENCE ONLY.
2. SEE REFERENCE GEOTECHNICAL REPORT FOR LOGS OF BORINGS AND CPTS.

DSM BUTTRESS DETAIL
NTS

DSM PLAN
SCALE: 1" = 40'

N

0' 40' 80'
SCALE: 1"=40'

AGI
ADVANCED GEOSOLUTIONS Inc.
13 Orchard Rd, Suite 105
Lake Forest, CA 92630
Phone (310) 796-9000 | Fax (310) 796-9001
www.advgeosolutions.com

REVISIONS		
NO.	DATE	DESCRIPTION
0	08/23/21	DESIGN SUBMITTAL
A	09/29/22	FOUNDATION UPDATE BLDG 6-12
B	03/17/23	FOUNDATION UPDATE BLDG 1
C	10/25/24	FOUNDATION UPDATE BLDG 1 & 12

REGISTERED PROFESSIONAL ENGINEER THOMAS TRAN C 91763 CIVIL STATE OF CALIFORNIA

PROJECT:

GROUND IMPROVEMENT FOR

DANA POINT HARBOR COMMERCIAL COMPONENT DANA POINT, CA

SHEET TITLE:

DEEP SOIL MIXING PLAN

PROJECT NO. 714290	SHEET NUMBER: GI-3
DATE: 10/25/2023	
SCALE: AS SHOWN	

S:\Projects\P714290 Dana Point Harbor Design\Drawings\Main Files\AGI_Sheet_DSM.dwg

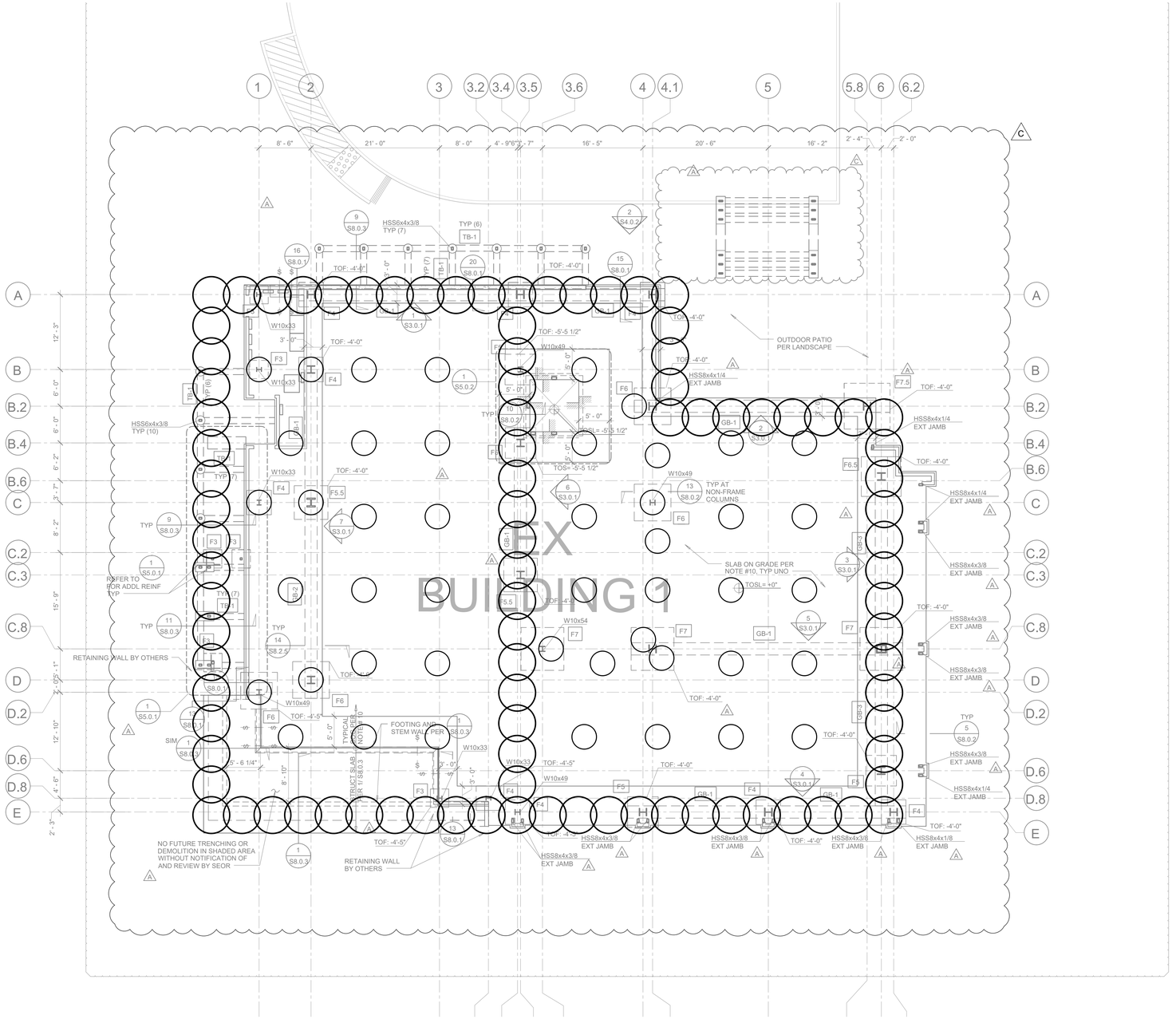

DSM COLUMN LAYOUT – BUILDING 1
SCALE: 1/8" = 1'

0' 8' 16'

LEGEND:

DSM COLUMN 6' ø BEARING ON CAPISTRANO FORMATION

DSM COLUMN 4' ø BEARING ON CAPISTRANO FORMATION

NOTES:
1. FOUNDATION PLAN RECEIVED 10/18/2024 AND SHOWN FOR REFERENCE ONLY. SEE LATEST STRUCTURAL PLANS FOR LOCATION AND DIMENSIONS OF FOOTINGS.

Zoning: CanningK 11/13/2024

Building&Safety: OCPWAzarvandB 12/22/2025

Permits: BNR21-0246, ELE21-0853, MEC21-0514, PLB21-0900

County of Orange - OC Public Works
OC Development Services
APPROVED

This set of plans and specifications must be kept on the job at all times. It is unlawful to make any changes or alterations to these plans without written permission from OC Public Works, OC Development Services of Orange County. The stamping of these plan specifications SHALL NOT be held to permit or be an approval of the violation of any provisions of any County Ordinance or State law.

Hind Tahtabaee
BUILDING OFFICIAL

AGI
ADVANCED GEOSOLUTIONS Inc.

13 Orchard Rd, Suite 105
Lake Forest, CA 92630
Phone (310) 796-9000 | Fax (310) 796-9001
www.advgeosolutions.com

REVISIONS		
NO.	DATE	DESCRIPTION
0	08/23/21	DESIGN SUBMITTAL
A	09/29/22	FOUNDATION UPDATE BLDG 6-12
B	03/17/23	FOUNDATION UPDATE BLDG 1
C	10/25/24	FOUNDATION UPDATE BLDG 1 & 12

REGISTERED PROFESSIONAL ENGINEER THOMAS TEAM C 91763 CIVIL STATE OF CALIFORNIA

PROJECT:

GROUND IMPROVEMENT FOR

DANA POINT HARBOR COMMERCIAL COMPONENT
DANA POINT, CA

SHEET TITLE:

DEEP SOIL MIXING LAYOUT - BUILDING 1

PROJECT NO. 714290

DATE: 10/25/2023

SCALE: AS SHOWN

SHEET NUMBER: GI-4.1

S:\Projects\P714290 Dana Point Harbor Design\Drawings\Main Files\AGI_Sheet_DSM.dwg

Zoning: CanningK 11/13/2024

Building&Safety: OCPWAzarvandB 12/22/2025

Permits: BNR21-0246, ELE21-0853, MEC21-0514, PLB21-0900

County of Orange - OC Public Works
OC Development Services
APPROVED

This set of plans and specifications must be kept on the job at all times. It is unlawful to make any changes or alterations to these plans without written permission from OC Public Works, OC Development Services of Orange County. The stamping of these plan specifications SHALL NOT be held to permit or be an approval of the violation of any provisions of any County Ordinance or State law.

Hasi Tabatabaee
BUILDING OFFICIAL

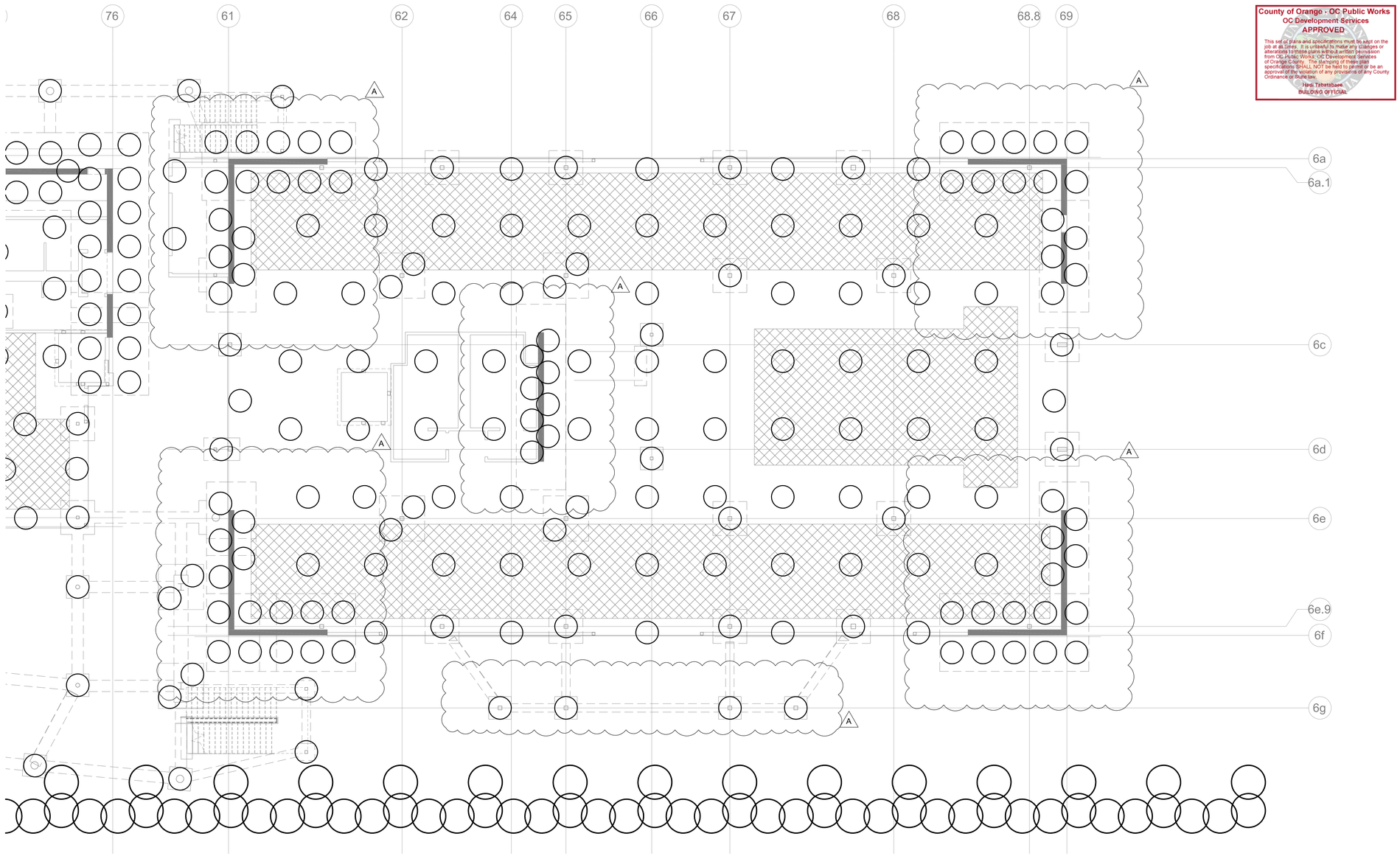

DSM COLUMN LAYOUT – BUILDING 6
SCALE: 1/8" = 1'

0' 8' 16'

LEGEND:

DSM COLUMN 6' ø EMBED 4' INTO CAPISTRANO FORMATION

DSM COLUMN 4' ø BEARING ON CAPISTRANO FORMATION

NOTES:
1. FOUNDATION BACKGROUND RECEIVED 9/23/2022 AND SHOWN FOR REFERENCE ONLY. SEE LATEST STRUCTURAL PLANS FOR LOCATION AND DIMENSIONS OF FOOTINGS.

AGI
ADVANCED GEOSOLUTIONS Inc.
13 Orchard Rd, Suite 105
Lake Forest, CA 92630
Phone (310) 796-9000 | Fax (310) 796-9001
www.advgeosolutions.com

REVISIONS

NO.	DATE	DESCRIPTION
0	08/23/21	DESIGN SUBMITTAL
A	09/29/22	FOUNDATION UPDATE BLDG 6-12

REGISTERED PROFESSIONAL ENGINEER
THOMAS TRAN
C 91763
CIVIL
STATE OF CALIFORNIA

PROJECT:

GROUND IMPROVEMENT FOR

DANA POINT HARBOR
COMMERCIAL COMPONENT
DANA POINT, CA

SHEET TITLE:

DEEP SOIL MIXING LAYOUT - BUILDING 6

PROJECT NO. 714290

DATE: 09/29/2022

SCALE: AS SHOWN

SHEET NUMBER: GI-4.2

S:\Projects\P714290 Dana Point Harbor Design\Drawings\Main Files\AGI_Sheet_DSM.dwg

Zoning: CanningK 11/13/2024

Building&Safety: OCPWAzarvandB 12/22/2025

Permits: BNR21-0246, ELE21-0853, MEC21-0514, PLB21-0900

County of Orange - OC Public Works
OC Development Services
APPROVED
This set of plans and specifications must be kept on the job at all times. It is unlawful to make any changes or alterations to these plans without written permission from OC Public Works, OC Development Services of Orange County. The stamping of these plan specifications SHALL NOT be held to permit or be an approval of the violation of any provisions of any County Ordinance or State law.
Hasi Tabatabaee
BUILDING OFFICIAL

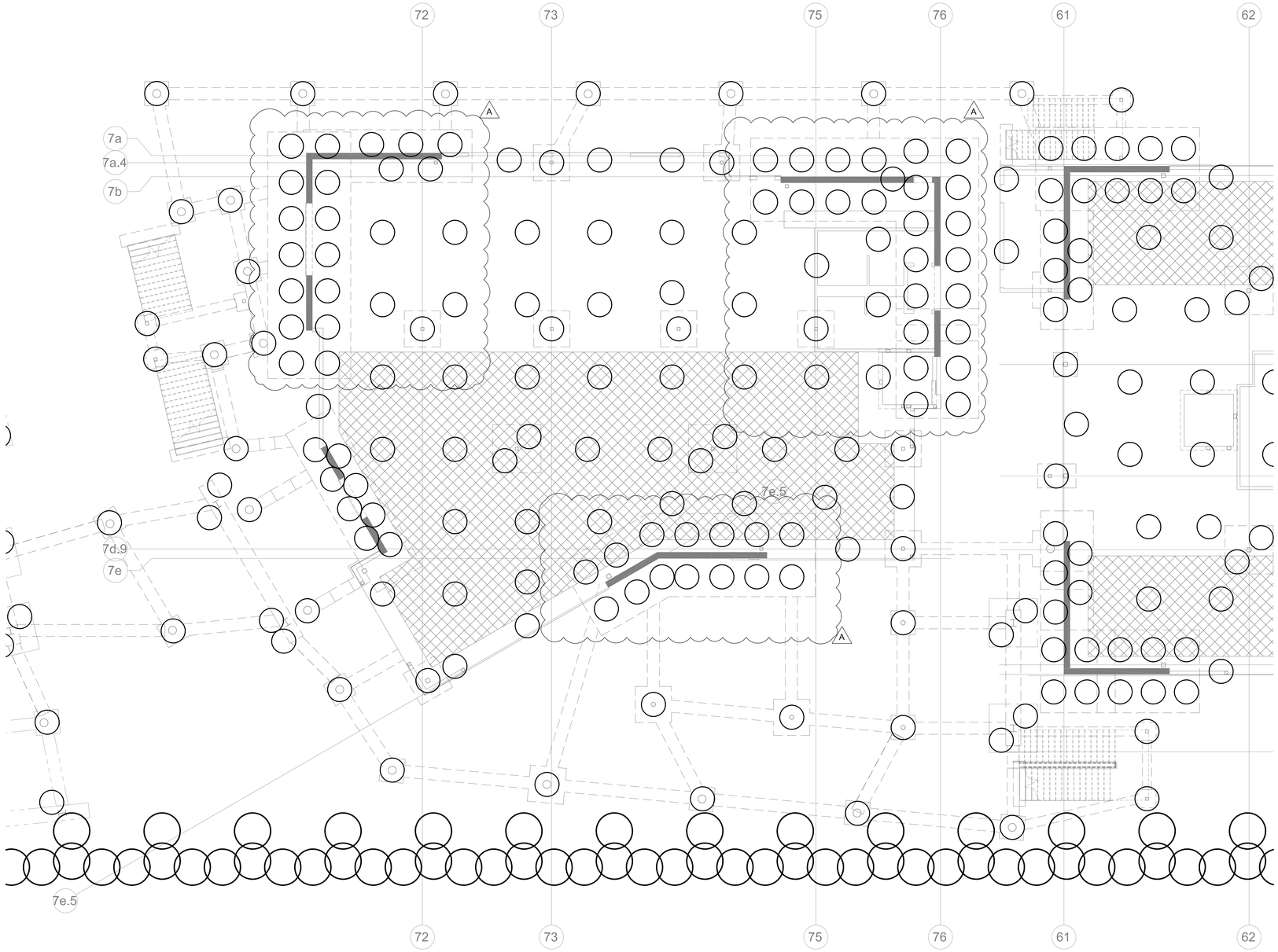

DSM COLUMN LAYOUT – BUILDING 7
SCALE: 1/8" = 1'

0' 8' 16'

LEGEND:

DSM COLUMN 6' ø EMBED 4' INTO CAPISTRANO FORMATION

DSM COLUMN 4' ø BEARING ON CAPISTRANO FORMATION

NOTES:
1. FOUNDATION BACKGROUND RECEIVED 9/23/2022 AND SHOWN FOR REFERENCE ONLY. SEE LATEST STRUCTURAL PLANS FOR LOCATION AND DIMENSIONS OF FOOTINGS.

AGI
ADVANCED GEOSOLUTIONS Inc.
13 Orchard Rd, Suite 105
Lake Forest, CA 92630
Phone (310) 796-9000 | Fax (310) 796-9001
www.advgeosolutions.com

REVISIONS

NO.	DATE	DESCRIPTION
0	08/23/21	DESIGN SUBMITTAL
A	09/29/22	FOUNDATION UPDATE BLDG 6-12

REGISTERED PROFESSIONAL ENGINEER THOMAS TRAN C 91763 CIVIL STATE OF CALIFORNIA

PROJECT:

GROUND IMPROVEMENT FOR

DANA POINT HARBOR COMMERCIAL COMPONENT DANA POINT, CA

SHEET TITLE:

DEEP SOIL MIXING LAYOUT - BUILDING 7

PROJECT NO. 714290

DATE: 09/29/2022

SCALE: AS SHOWN

SHEET NUMBER: GI-4.3

S:\Projects\P714290 Dana Point Harbor Design\Drawings\Main Files\AGI_Sheet_DSM.dwg

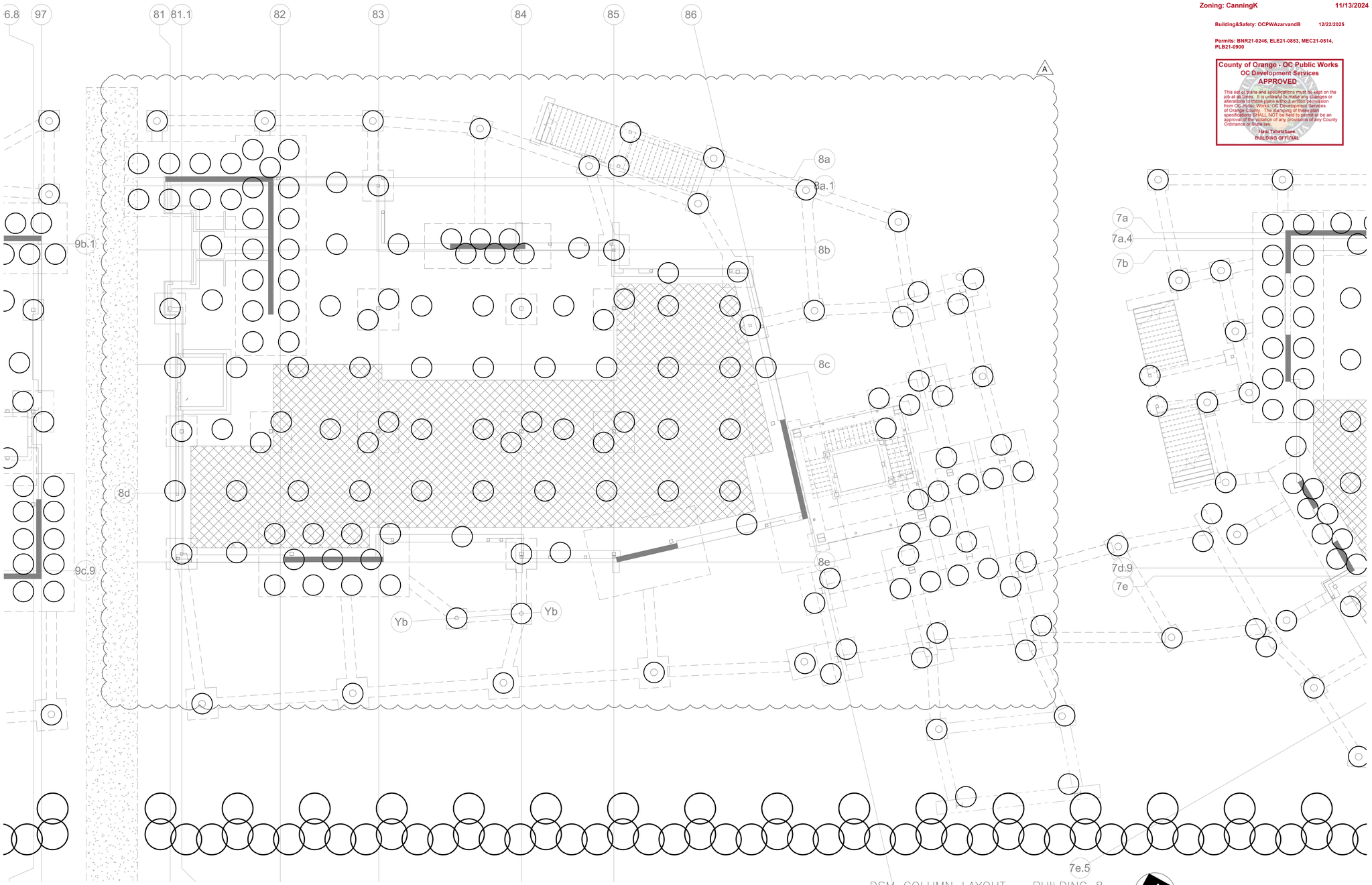

DSM COLUMN LAYOUT – BUILDING 8
SCALE: 1/8" = 1'

0' 8' 16'

LEGEND:

DSM COLUMN 6' ø EMBED 4' INTO CAPISTRANO FORMATION

DSM COLUMN 4' ø BEARING ON CAPISTRANO FORMATION

NOTES:

1. FOUNDATION BACKGROUND RECEIVED 9/23/2022 AND SHOWN FOR REFERENCE ONLY. SEE LATEST STRUCTURAL PLANS FOR LOCATION AND DIMENSIONS OF FOOTINGS.

Zoning: CanningK 11/13/2024

Building&Safety: OCPWAzarvandB 12/22/2025

Permits: BNR21-0246, ELE21-0853, MEC21-0514, PLB21-0900

County of Orange - OC Public Works
OC Development Services
APPROVED

This set of plans and specifications must be kept on the job at all times. It is unlawful to make any changes or alterations to these plans without written permission from OC Public Works, OC Development Services of Orange County. The stamping of these plan specifications SHALL NOT be held to permit or be an approval of the violation of any provisions of any County Ordinance or State law.

Hani Tahtabawi
BUILDING OFFICIAL

AGI
ADVANCED GEOSOLUTIONS Inc.

13 Orchard Rd, Suite 105
Lake Forest, CA 92630
Phone (310) 796-9000 | Fax (310) 796-9001
www.advgeosolutions.com

REVISIONS		
NO.	DATE	DESCRIPTION
0	08/23/21	DESIGN SUBMITTAL
A	09/29/22	FOUNDATION UPDATE BLDG 6-12

REGISTERED PROFESSIONAL ENGINEER
THOMAS TRAN
C 91763
CIVIL
STATE OF CALIFORNIA

PROJECT:

GROUND IMPROVEMENT FOR

DANA POINT HARBOR
COMMERCIAL COMPONENT
DANA POINT, CA

SHEET TITLE:

DEEP SOIL MIXING LAYOUT - BUILDING 8

PROJECT NO.	SHEET NUMBER:
714290	GI-4.4
DATE: 09/29/2022	
SCALE: AS SHOWN	

S:\Projects\P714290 Dana Point Harbor Design\Drawings\Main Files\AGI_Sheet_DSM.dwg

Zoning: CanningK 11/13/2024

Building&Safety: OCPWAzarvandB 12/22/2025

Permits: BNR21-0246, ELE21-0853, MEC21-0514, PLB21-0900

County of Orange - OC Public Works
OC Development Services
APPROVED

This set of plans and specifications must be kept on the job at all times. It is unlawful to make any changes or alterations to these plans without written permission from OC Public Works, OC Development Services of Orange County. The stamping of these plan specifications SHALL NOT be held to permit or be an approval of the violation of any provisions of any County Ordinance or State law.

Hadi Tabatabaee
BUILDING OFFICIAL

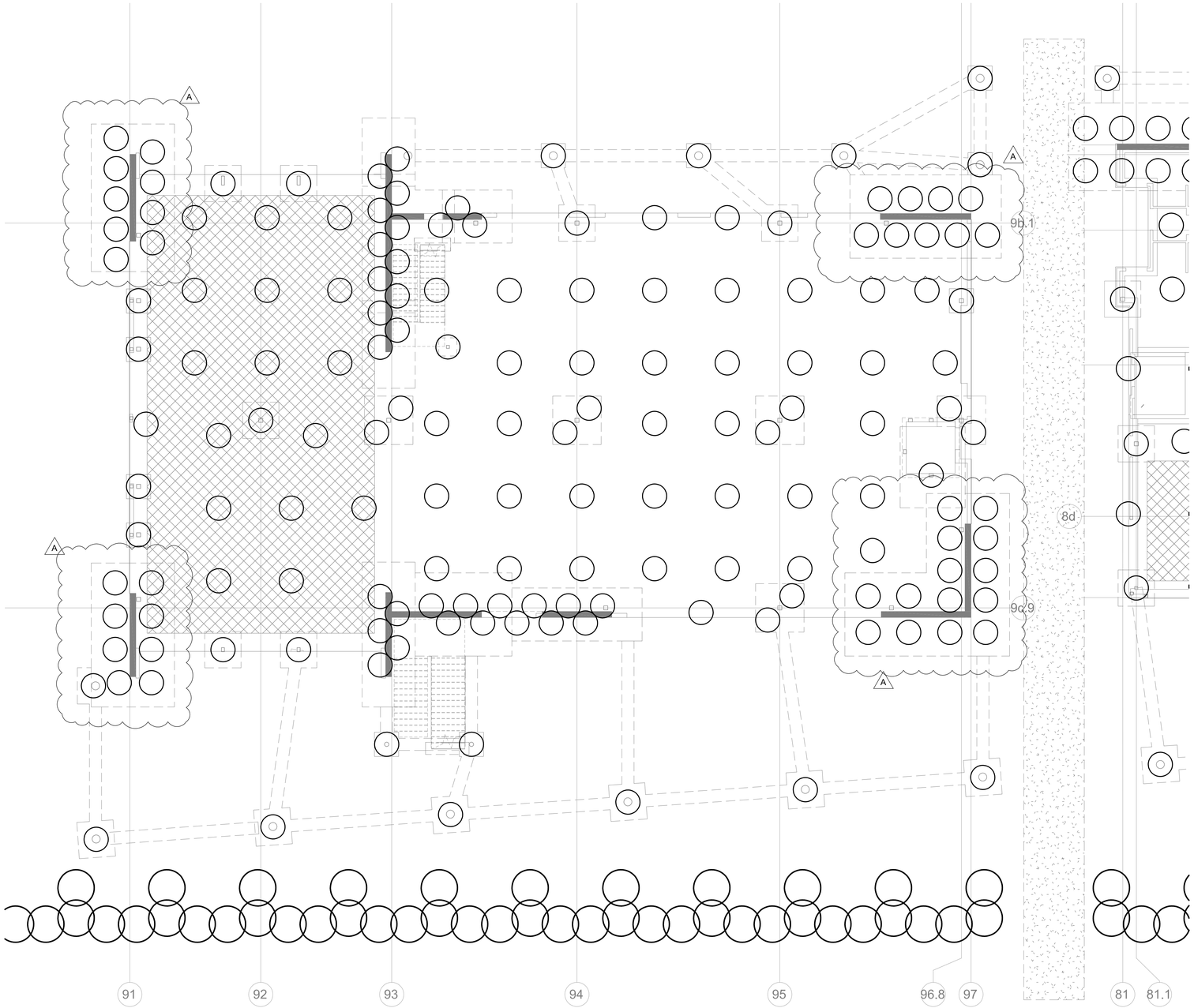

DSM COLUMN LAYOUT – BUILDING 9
SCALE: 1/8" = 1'

0' 8' 16'

LEGEND:

DSM COLUMN 6' ø EMBED 4' INTO CAPISTRANO FORMATION

DSM COLUMN 4' ø BEARING ON CAPISTRANO FORMATION

NOTES:
1. FOUNDATION BACKGROUND RECEIVED 9/23/2022 AND SHOWN FOR REFERENCE ONLY. SEE LATEST STRUCTURAL PLANS FOR LOCATION AND DIMENSIONS OF FOOTINGS.

AGI
ADVANCED GEOSOLUTIONS Inc.
13 Orchard Rd, Suite 105
Lake Forest, CA 92630
Phone (310) 796-9000 | Fax (310) 796-9001
www.advgeosolutions.com

REVISIONS

NO.	DATE	DESCRIPTION
0	08/23/21	DESIGN SUBMITTAL
A	09/29/22	FOUNDATION UPDATE BLDG 6-12

REGISTERED PROFESSIONAL ENGINEER THOMAS TRAN C 91763 CIVIL STATE OF CALIFORNIA

PROJECT:

GROUND IMPROVEMENT FOR

DANA POINT HARBOR COMMERCIAL COMPONENT DANA POINT, CA

SHEET TITLE:

DEEP SOIL MIXING LAYOUT - BUILDING 9

PROJECT NO. 714290

DATE: 09/29/2022

SCALE: AS SHOWN

SHEET NUMBER: GI-4.5

S:\Projects\P714290 Dana Point Harbor Design\Drawings\Main Files\AGI_Sheet_DSM.dwg

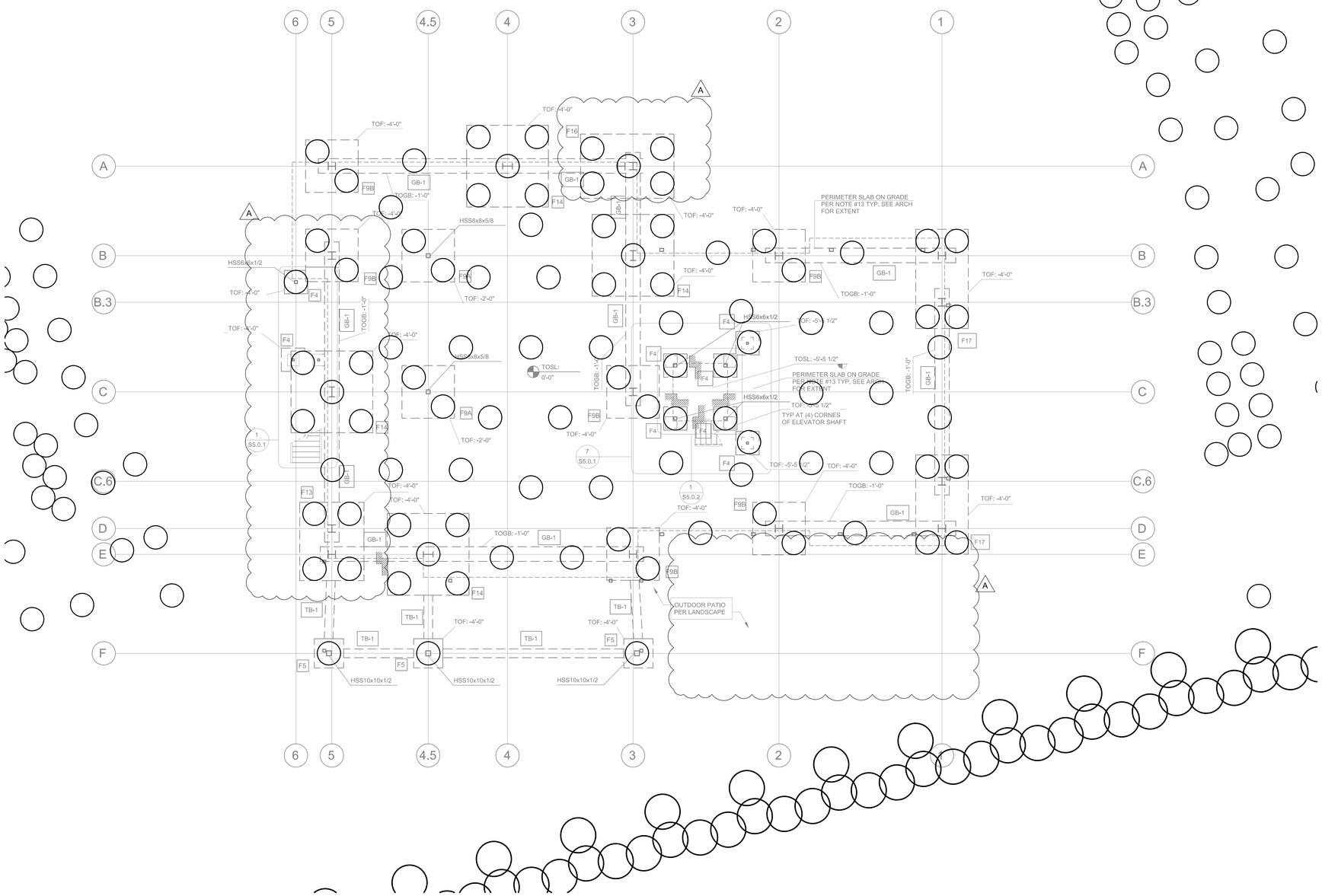

DSM COLUMN LAYOUT – BUILDING 10
SCALE: 1/8" = 1'

LEGEND:

DSM COLUMN 6' ø EMBED 4' INTO CAPISTRANO FORMATION

DSM COLUMN 4' ø BEARING ON CAPISTRANO FORMATION

NOTES:
1. FOUNDATION BACKGROUND RECEIVED 9/23/2022 AND SHOWN FOR REFERENCE ONLY. SEE LATEST STRUCTURAL PLANS FOR LOCATION AND DIMENSIONS OF FOOTINGS.

Zoning: CanningK 11/13/2024

Building&Safety: OCPWAzarvandB 12/22/2025

Permits: BNR21-0246, ELE21-0853, MEC21-0514, PLB21-0900

County of Orange - OC Public Works
OC Development Services
APPROVED
This set of plans and specifications must be kept on the job at all times. It is unlawful to make any changes or alterations to these plans without written permission from OC Public Works, OC Development Services of Orange County. The stamping of these plan specifications SHALL NOT be held to permit or be an approval of the violation of any provisions of any County Ordinance or State law.
Hadi Tabatabaee
BUILDING OFFICIAL

AGI
ADVANCED GEOSOLUTIONS Inc.
13 Orchard Rd, Suite 105
Lake Forest, CA 92630
Phone (310) 796-9000 | Fax (310) 796-9001
www.advgeosolutions.com

REVISIONS

NO.	DATE	DESCRIPTION
0	08/23/21	DESIGN SUBMITTAL
A	09/29/22	FOUNDATION UPDATE BLDG 6-12

REGISTERED PROFESSIONAL ENGINEER THOMAS TRAN C 91763 CIVIL STATE OF CALIFORNIA

PROJECT:

GROUND IMPROVEMENT FOR

DANA POINT HARBOR COMMERCIAL COMPONENT DANA POINT, CA

SHEET TITLE:

DEEP SOIL MIXING LAYOUT - BUILDING 10

PROJECT NO. 714290

DATE: 09/29/2022

SCALE: AS SHOWN

SHEET NUMBER: GI-4.6

S:\Projects\P714290 Dana Point Harbor Design\Drawings\Main Files\AGI_Sheet_DSM.dwg

Zoning: CanningK 11/13/2024

Building&Safety: OCPWAzarvandB 12/22/2025

Permits: BNR21-0246, ELE21-0853, MEC21-0514, PLB21-0900

County of Orange - OC Public Works
OC Development Services
APPROVED

This set of plans and specifications must be kept on the job at all times. It is unlawful to make any changes or alterations to these plans without written permission from OC Public Works, OC Development Services of Orange County. The stamping of these plan specifications SHALL NOT be held to permit or be an approval of the violation of any provisions of any County Ordinance or State law.

Hadi Tabatabaee
BUILDING OFFICIAL

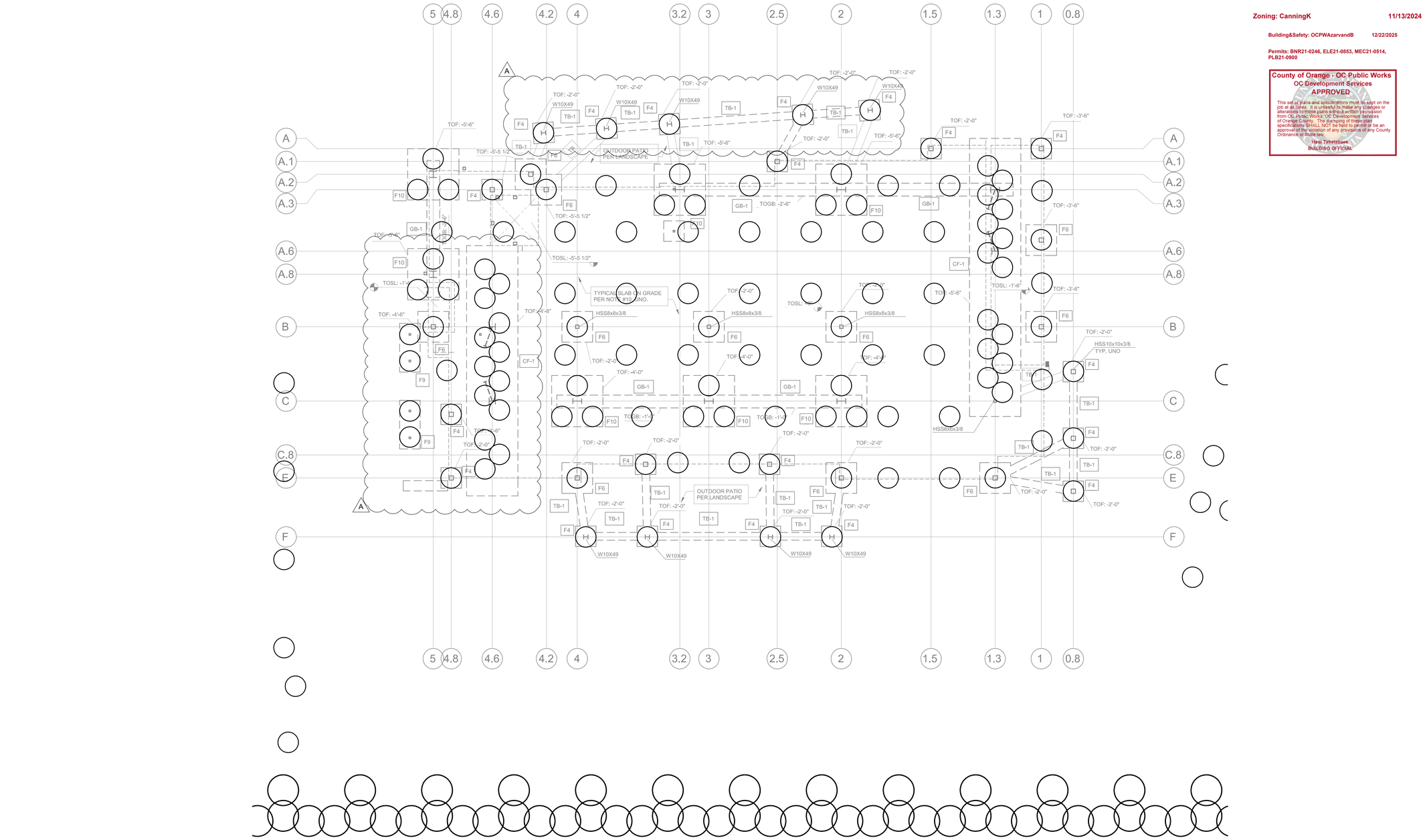

DSM COLUMN LAYOUT – BUILDING 11
SCALE: 1/8" = 1'

0' 8' 16'

LEGEND:

DSM COLUMN 6' ø EMBED 4' INTO CAPISTRANO FORMATION

DSM COLUMN 4' ø BEARING ON CAPISTRANO FORMATION

NOTES:

1. FOUNDATION BACKGROUND RECEIVED 9/23/2022 AND SHOWN FOR REFERENCE ONLY. SEE LATEST STRUCTURAL PLANS FOR LOCATION AND DIMENSIONS OF FOOTINGS.

AGI
ADVANCED GEOSOLUTIONS Inc.

13 Orchard Rd, Suite 105
Lake Forest, CA 92630
Phone (310) 796-9000 | Fax (310) 796-9001
www.advgeosolutions.com

REVISIONS

NO.	DATE	DESCRIPTION
0	08/23/21	DESIGN SUBMITTAL
A	09/29/22	FOUNDATION UPDATE BLDG 6-12

REGISTERED PROFESSIONAL ENGINEER THOMAS TRAN C 91763 CIVIL STATE OF CALIFORNIA

PROJECT:

GROUND IMPROVEMENT FOR

DANA POINT HARBOR COMMERCIAL COMPONENT DANA POINT, CA

SHEET TITLE:

DEEP SOIL MIXING LAYOUT - BUILDING 11

PROJECT NO. 714290

DATE: 09/29/2022

SCALE: AS SHOWN

SHEET NUMBER: GI-4.7

S:\Projects\P714290 Dana Point Harbor Design\Drawings\Main Files\AGI_Sheet_DSM.dwg

Zoning: CanningK 11/13/2024

Building&Safety: OCPWAzarvandB 12/22/2025

Permits: BNR21-0246, ELE21-0853, MEC21-0514, PLB21-0900

County of Orange - OC Public Works
OC Development Services
APPROVED
This set of plans and specifications must be kept on the job at all times. It is unlawful to make any changes or alterations to these plans without written permission from OC Public Works, OC Development Services of Orange County. The stamping of these plan specifications SHALL NOT be held to permit or be an approval of the violation of any provisions of any County Ordinance or State law.
Hadi Tabatabaee
BUILDING OFFICIAL

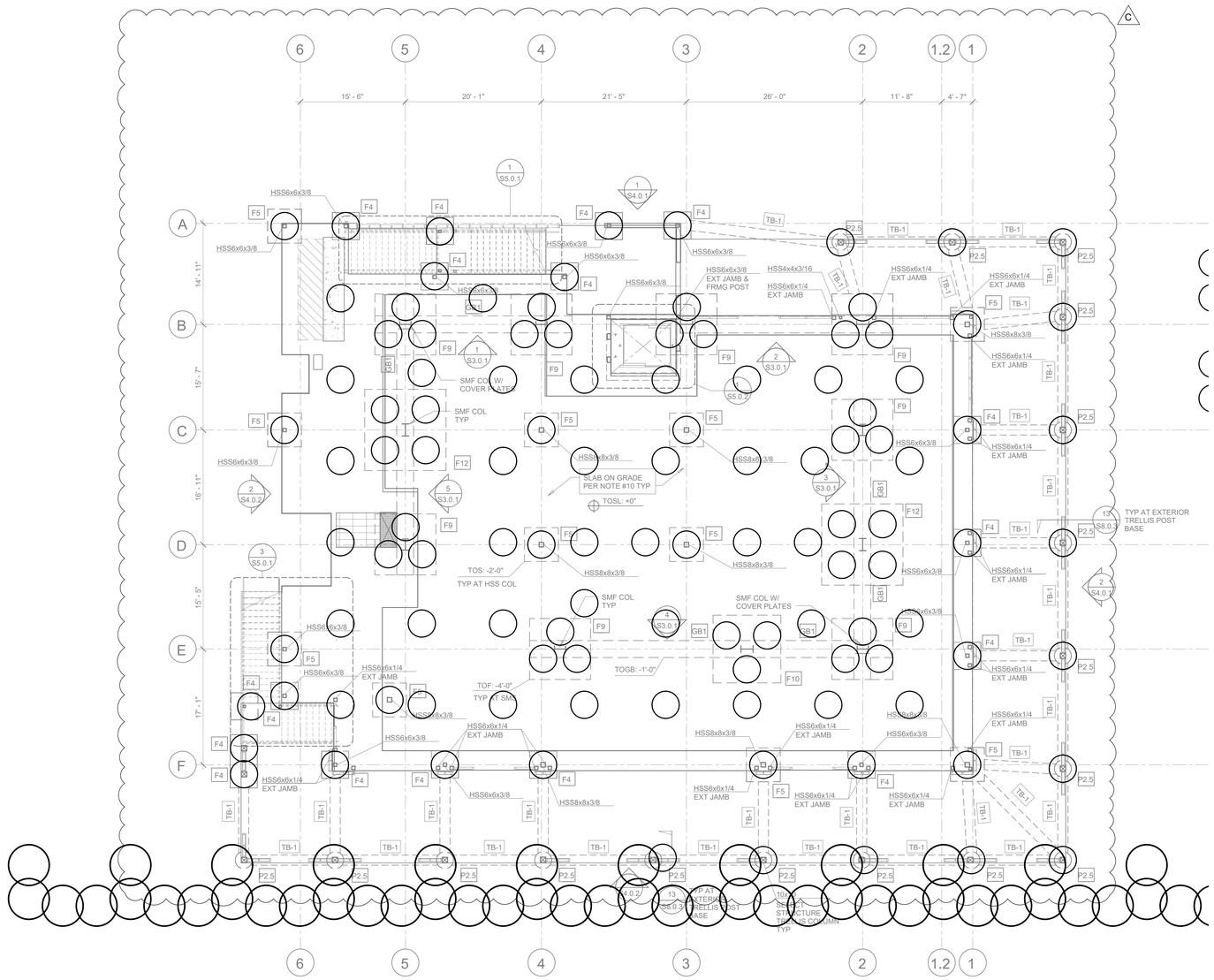

DSM COLUMN LAYOUT – BUILDING 12
SCALE: 1/8" = 1'

0' 8' 16'

LEGEND:

DSM COLUMN 6' ø EMBED 4' INTO CAPISTRANO FORMATION

DSM COLUMN 4' ø BEARING ON CAPISTRANO FORMATION

NOTES:
1. FOUNDATION BACKGROUND RECEIVED 10/18/2024 AND SHOWN FOR REFERENCE ONLY. SEE LATEST STRUCTURAL PLANS FOR LOCATION AND DIMENSIONS OF FOOTINGS.

AGI
ADVANCED GEOSOLUTIONS Inc.
13 Orchard Rd, Suite 105
Lake Forest, CA 92630
Phone (310) 796-9000 | Fax (310) 796-9001
www.advgeosolutions.com

REVISIONS

NO.	DATE	DESCRIPTION
0	08/23/21	DESIGN SUBMITTAL
A	09/29/22	FOUNDATION UPDATE BLDG 6-12
B	03/17/23	FOUNDATION UPDATE BLDG 1
C	10/25/24	FOUNDATION UPDATE BLDG 1 & 12

REGISTERED PROFESSIONAL ENGINEER THOMAS TRAN C 91763 CIVIL STATE OF CALIFORNIA

PROJECT:

GROUND IMPROVEMENT FOR

DANA POINT HARBOR COMMERCIAL COMPONENT DANA POINT, CA

SHEET TITLE:

DEEP SOIL MIXING LAYOUT - BUILDING 12

PROJECT NO. 714290

DATE: 10/25/2023

SCALE: AS SHOWN

SHEET NUMBER: GI-4.8

S:\Projects\P714290 Dana Point Harbor Design\Drawings\Main Files\AGI_Sheet_DSM.dwg

Zoning: CanningK 11/13/2024

Building&Safety: OCPWAzarvandB 12/22/2025

Permits: BNR21-0246, ELE21-0853, MEC21-0514, PLB21-0900

County of Orange - OC Public Works
OC Development Services
APPROVED

This set of plans and specifications must be kept on the job at all times. It is unlawful to make any changes or alterations to these plans without written permission from OC Public Works, OC Development Services of Orange County. The stamping of these plan specifications SHALL NOT be held to permit or be an approval of the violation of any provisions of any County Ordinance or State law.

Hadi Tabatabaee
BUILDING OFFICIAL

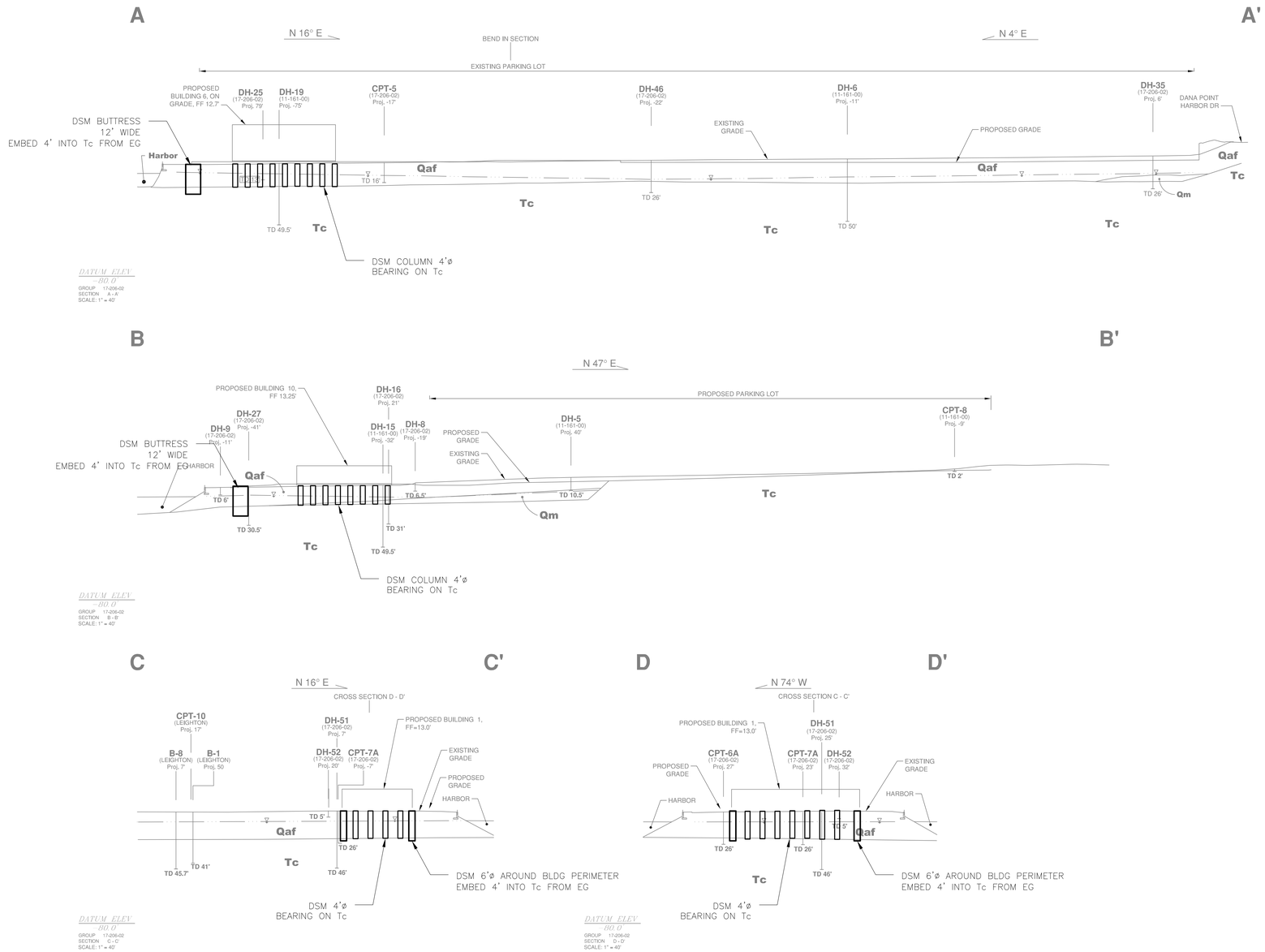

AGI
ADVANCED GEOSOLUTIONS Inc.

13 Orchard Rd, Suite 105
Lake Forest, CA 92630
Phone (310) 796-9000 | Fax (310) 796-9001
www.advgeosolutions.com

REVISIONS

NO.	DATE	DESCRIPTION
–	–	–

REGISTERED PROFESSIONAL ENGINEER THOMAS TRAN C 91763 CIVIL STATE OF CALIFORNIA

PROJECT:

GROUND IMPROVEMENT FOR

DANA POINT HARBOR COMMERCIAL COMPONENT DANA POINT, CA

SHEET TITLE:

GEOTECHNICAL SECTIONS

PROJECT NO. –

DATE: 08/23/2021

SCALE: AS SHOWN

SHEET NUMBER: GI-5

S:\Projects\P714290 Dana Point Harbor Design\Drawings\Main Files\AGI_Sheet_DSM.dwg